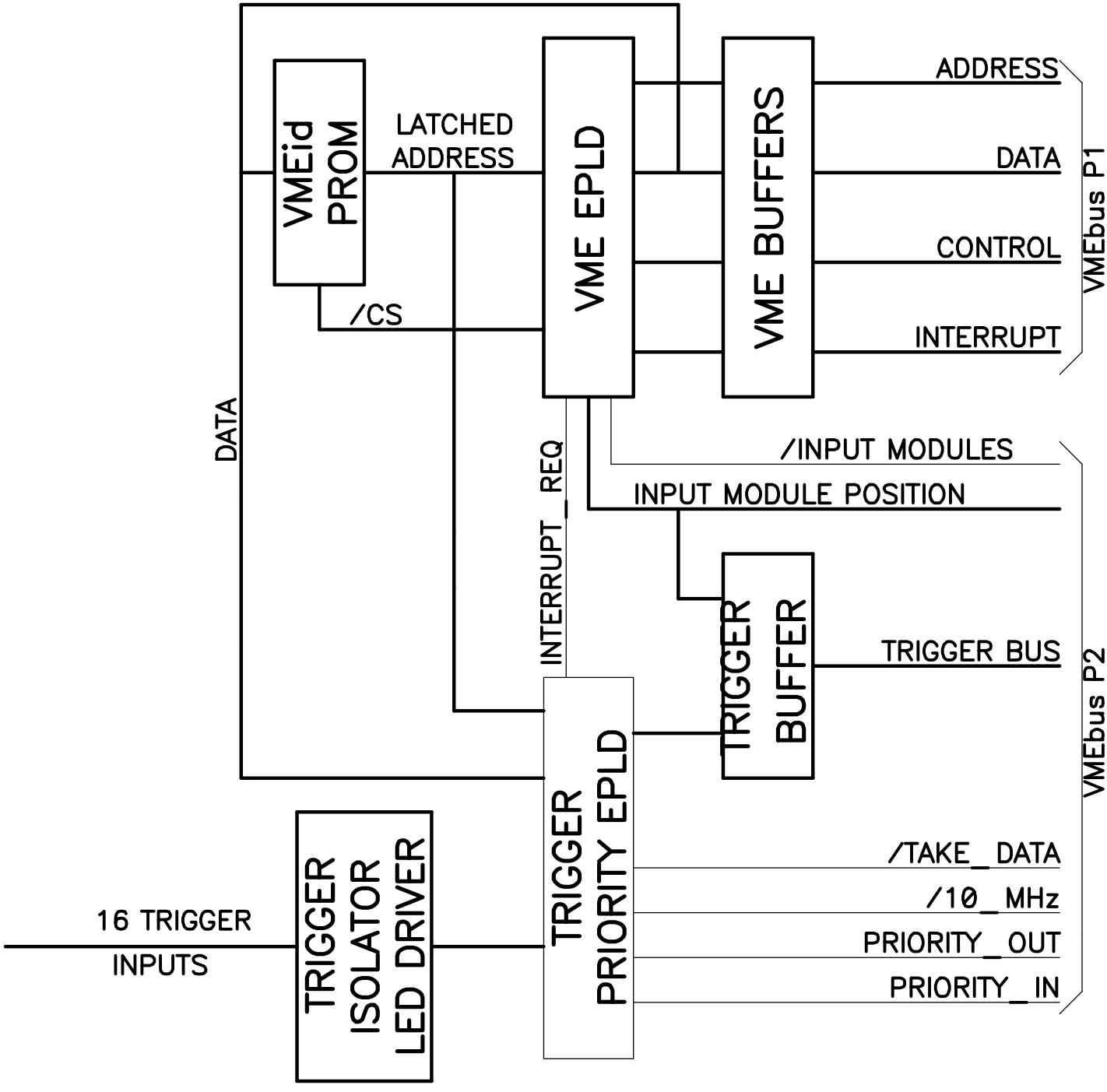
VMEid PROM
LATCHED ADDRESS
VME EPLD
VME BUFFERS
ADDRESS
DATA
CONTROL
INTERRUPT
VMEbus P1
/CS
DATA
INTERRUPT_REQ
/INPUT MODULES
INPUT MODULE POSITION
TRIGGER BUFFER
TRIGGER BUS
VMEbus P2
TRIGGER PRIORITY EPLD
/TAKE_DATA
/10_MHz
PRIORITY_OUT
PRIORITY_IN
16 TRIGGER INPUTS
TRIGGER ISOLATOR LED DRIVER