P2A:A	1	STAT_ID7
P2A:B	2	STAT_ID6
P2A:C	3	PRIO_IN
P2A:D	4	TRIGGER7
P2A:E	5	TRIGGER6
P2A:F	6	TRIGGER5
P2A:G	7	TRIGGER4
P2A:H	8	TRIGGER3
P2A:I	9	TRIGGER2
P2A:J	10	TRIGGER1
P2A:K	11	TRIGGER0
P2A:L	12	
P2A:M	13	

P2B:A	1	+5V
P2B:B	2	DGND
P2B:C	3	RESERVED
P2B:D	4	A24
P2B:E	5	A25
P2B:F	6	A26
P2B:G	7	A27
P2B:H	8	A28
P2B:I	9	A29
P2B:J	10	A30
P2B:K	11	A31
P2B:L	12	DGND
P2B:M	13	+5V

P2C:A	1	STAT_ID5
P2C:B	2	STAT_ID4
P2C:C	3	PRIO_OUT
P2C:D	4	INP_ADD*
P2C:E	5	10_MHZ*
P2C:F	6	TAK_DAT*
P2C:G	7	
P2C:H	8	SWR10
P2C:I	9	SWR09
P2C:J	10	SWR08
P2C:K	11	SWR07
P2C:L	12	
P2C:M	13	

PARTIAL VIEW OF VMEbus P2 BACKPLANE CONNECTOR
VIEW FROM FRONT OF VMEbus BACKPLANE

NOTE: PRIO_OUT, P2C3, OF LAST ACTIVE V101 MODULE MUST BE WIRED TO V100, P2C7. THIS WIRE SENDS V101 MODULE STATUS TO V100.

SIGNAL	PIN	BUSS
STAT_ID4	P2C2	SLOT 5 to 21
STAT_ID5	P2C1	SLOT 5 to 21
STAT_ID6	P2A2	SLOT 5 to 21
STAT_ID7	P2A1	SLOT 5 to 21
TRIGGER0	P2A11	SLOT 5 to 21
TRIGGER1	P2A10	SLOT 5 to 21
TRIGGER2	P2A9	SLOT 5 to 21
TRIGGER3	P2A8	SLOT 5 to 21
TRIGGER4	P2A7	SLOT 5 to 21
TRIGGER5	P2A6	SLOT 5 to 21
TRIGGER6	P2A5	SLOT 5 to 21
TRIGGER7	P2A4	SLOT 5 to 21
INP_ADD*	P2C4	SLOT 5 to 21
10_MHZ*	P2C5	SLOT 5 to 21
TAK_DAT*	P2C6	SLOT 5 to 21

SLOT ADDRESS CONNECTIONS

SLOT	P2C8	P2C9	P2C10	P2C11
6	GND	GND	GND	GND
7	GND	GND	GND	–
8	GND	GND	–	GND
9	GND	GND	–	–
10	GND	–	GND	GND
11	GND	–	GND	–
12	GND	–	–	GND
13	GND	–	–	–
14	–	GND	GND	GND
15	–	GND	GND	–
16	–	GND	–	GND
17	–	GND	–	–
18	–	–	GND	GND
19	–	–	GND	–
20	–	–	–	GND
21	–	–	–	–

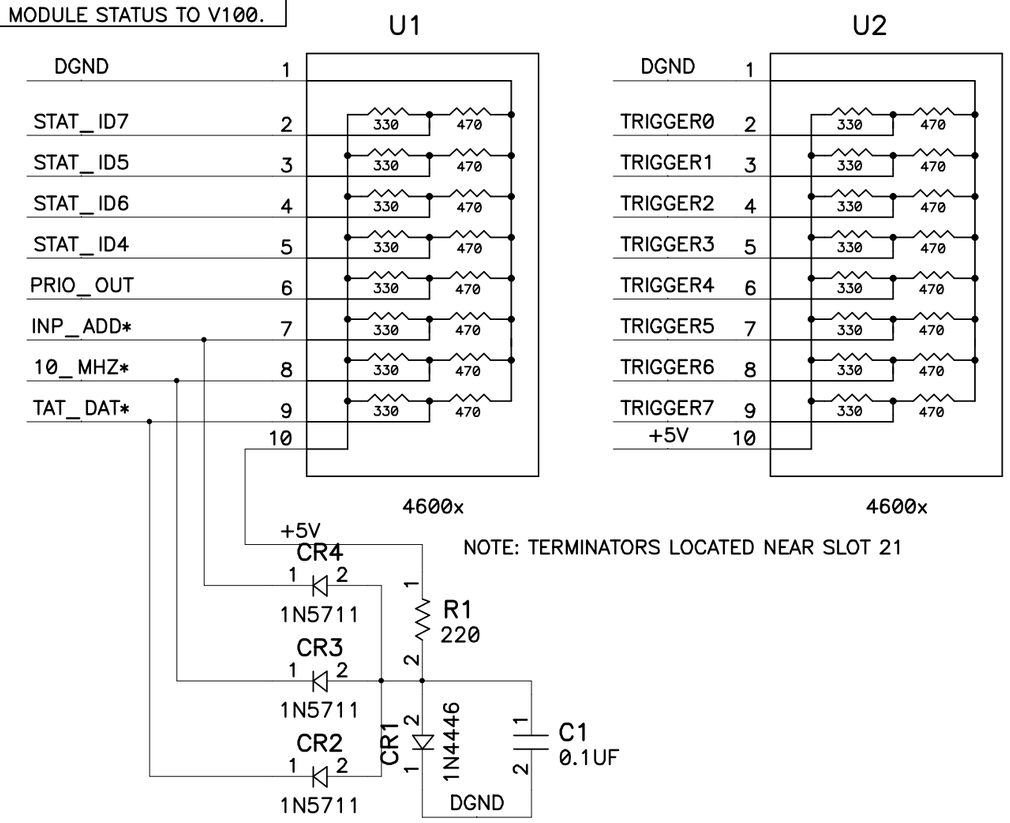

NOTE: TERMINATORS LOCATED NEAR SLOT 21

PRIORITY DAISY CHAIN CONNECTIONS

P2C3–5 to P2A3–6	P2C3–13 to P2A3–14
P2C3–6 to P2A3–7	P2C3–14 to P2A3–15
P2C3–7 to P2A3–8	P2C3–15 to P2A3–16
P2C3–8 to P2A3–9	P2C3–16 to P2A3–17
P2C3–9 to P2A3–10	P2C3–17 to P2A3–18
P2C3–10 to P2A3–11	P2C3–18 to P2A3–19
P2C3–11 to P2A3–12	P2C3–19 to P2A3–20
P2C3–12 to P2A3–13	P2C3–20 to P2A3–21

REVISIONS

REV	ZONE	ECN NO.	DESCRIPTION	BY	DATE	CKR	APP

DWG. NO. | SH | REV.

USED ON DRAWING NUMBER | NO. PER ASS'Y

INTERPRET DRAWING AS PER RHIC DESIGN STANDARDS DS–1

UNLESS OTHERWISE SPECIFIED

DIMENSIONS ARE IN INCHES
DECIMAL TOLERANCES
.X .06
.XX .02
.XXX .005
ANGULAR TOLERANCE ±1°

FINISH — BREAK SHARP EDGES — MAX. MIN.

RHIC

DRAWN BY	C. R. CONKLING	6/10/94
DESIGN APPROVAL		
CHECKED BY		
ENGINEER APPROVAL		
SUPERVISOR APPROVAL		
Q.A. APPROVAL		

BROOKHAVEN NATIONAL LABORATORY
ASSOCIATED UNIVERSITIES, INC.
UPTON, N.Y. 11973

TITLE: RHIC TIMELINE ENCODER MODULE BACKPLANE

SIZE B | DRAWING NUMBER: 94028029 (SIMPLIFIED VIEW OF DRAWING) | REV.

SCALE: | WEIGHT: | SHEET OF