RHIC Accelerator Controls Section
Bldg. 1008B Wiring Diagrams
BNL Drawing Number 94028559

Brookhaven National Laboratory, Upton, New York 11973

Created By: Ed Koropsak
Last Updated 1/02/02

Power Distribution
🕮 Rack R08B06 (Sheet 1)
🕮 Rack R08B05, Rack R08B04 (Sheet 2)
🕮 Rack R08B03 (Sheet 3)

SPARES
🕮 MADC Channels (Sheet 47)
🕮 F/O Channels (Sheet 48)

Serial Links
🕮 Event Link (Sheet 4,5)
🕮 Real Time Data Link (RTDL) (Sheet 6,7)
🕮 Reset Link (Sheet 8,53)
🕮 Beam Sync Yellow Link (Sheet 9)
🕮 Beam Sync Blue Link (Sheet 10)

VME Chassis CFE-8B-PS1 modules
🕮 CPU, Memory Board, V108 Utility Module (Sheet 11)
🕮 V113/V114 MADC System (Sheet 12)
🕮 V115 WFG A: bo7-tq4, bo7-tq5 (Sheet 13)
🕮 V115 WFG B: bo7-tq6, bi8-tq4 (Sheet 14)
🕮 V115 WFG C: bi8-tq5, bi8-tq6 (Sheet 15)
🕮 V115 WFG D: b8-q89, bi8-qf9 (Sheet 16)
🕮 V115 WFG E: bo7-qf8, b8-dhx (Sheet 17)
🕮 V115 WFG F: b8-q7, b8-dh0 (Sheet 18)
🕮 V115 WFG G: b8-q6 (Sheet 19)
🕮 V115 WFG H: bo8-qd1, bi8-qf1 (Sheet 20)
🕮 V115 WFG I: bo7-qf2, bo7-qd3 (Sheet 21)
🕮 V115 WFG J: bi8-qd2, bi8-qf3 (Sheet 22)
🕮 V120 Permit Module (Sheet 51)
🕮 DX Heater PS MADC Readbacks (Sheet 50)
🕮 PHENIX PS MADC Readbacks (Sheet 50)
🕮 Permit System Interface Panel (Sheet 52)

VME Chassis CFE-8B-PS2 modules
🕮 CPU, Memory Board, V108 Utility Module (Sheet 28)
🕮 V113/V114 MADC System (Sheet 29)
🕮 V115 WFG A: yi7-tq4, yi7-tq5 (Sheet 30)
🕮 V115 WFG B: yi7-tq6, yo8-tq4 (Sheet 31)
🕮 V115 WFG C: yo8-tq5, yo8-tq6 (Sheet 32)
🕮 V115 WFG D: y8-q89, yo8-qf8 (Sheet 33)
🕮 V115 WFG E: yi7-qf9, y8-dh0 (Sheet 34)
🕮 V115 WFG F: y8-q7 (Sheet 35)
🕮 V115 WFG G: y8-q6 (Sheet 36)
🕮 V115 WFG H: yi7-qf1, yo8-qd1 (Sheet 37)
🕮 V115 WFG I: yi7-qd2, yi7-qf3 (Sheet 38)
🕮 V115 WFG J: yo8-qf2, yo8-qd3 (Sheet 39)
🕮 V102 Delay Module A - Event Link (Sheet 49)

NOTE: Sheets 23-27, 40-46 are Blank

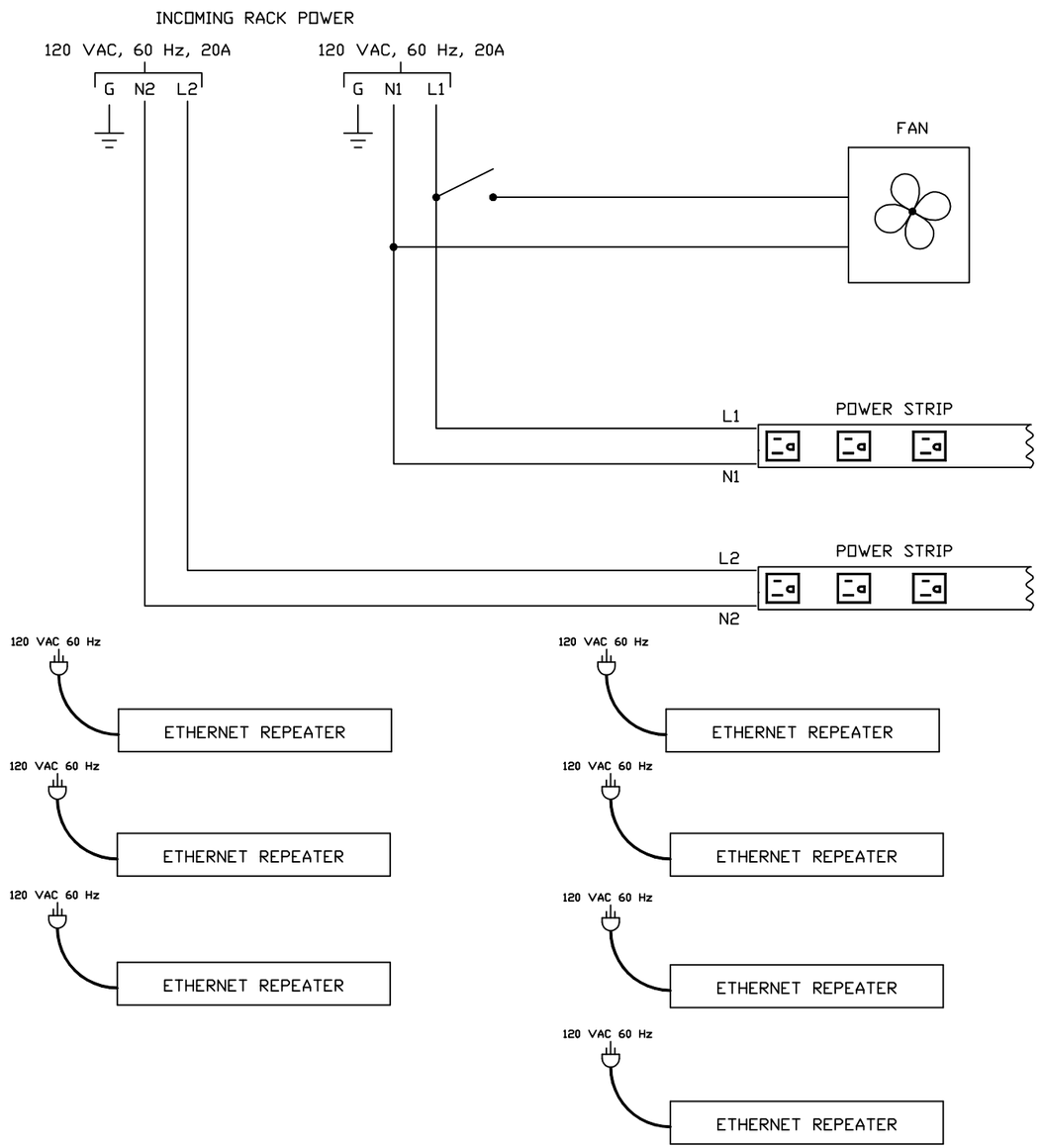

NOTE: ALL 120 VAC, 60 Hz POWER CORDS
PLUG INTO POWER STRIP OUTLETS

RACK R8B06

REV.	ZONE	ECN NO.	DATE	BY	CKR	APP.

-3	-2	-1	REF DESIGNATOR	ITEM NO.	DESCRIPTION	MAT'L DWG NO./INL NO.
		X		11	CABLE ASSY, POWER SUPPLY TO MADC A/D I/O PANEL (3 CABLES/PS)	
		X		10	CABLE ASSY, LOW RES PS IF MODULE TO POWER SUPPLY	
		X		9	PERMIT SYSTEM INTERFACE CABLE, T120 TO PERMIT SYSTEM INTERFACE PANEL	D09-E2225-2
		X		8	SERIAL LINK TWINAX CABLE, LENGTH AS REQUIRED	94028176
		X		7	SERIAL LINK TWINAX CABLE, 1 FT	94028176
		X		6	DUPLEX MULTIMODE FIBER OPTIC CABLE, T115 TO LOW RES PS INTERFACE MODULE	94028249
		X		5	SINGLE MODE FIBER OPTIC CABLE	94028251
		X		4	MADC A/D I/O CABLE	94028216
		X		3	TRANSITION MODULE P2 RIBBON CABLE, V115, V120	94028159
		X		2	MADC V113 TO V114 P2 INTERFACE RIBBON CABLE	94028218
		X		1	NETWORK CABLE TO FRONT END COMPUTER	

QTY REQD

INTERPRET IN GENERAL ACCORDANCE WITH ASME Y14.24M-1989

UNLESS OTHERWISE SPECIFIED DIMENSIONS ARE IN INCHES
DECIMAL TOLERANCES
.X ±.030
.XX ±.015
.XXX ±.005
ANGULAR TOLERANCE
± .5°

OUTSTANDING ECN

NA FINISH

BREAK SHARP EDGES
MAX. XX MIN. XX

Q.A. CATEGORY A-3

		DATE
DRAWN BY	Ed Koropsak	6/5/98
CHECKED BY		
DESIGN APPROVAL		
ENGINEER APPROVAL	R. MICHNOFF	6/5/98
SUPVR. APPROVAL		

NEXT ASSEMBLY

BROOKHAVEN NATIONAL LABORATORY
UPTON, N.Y. 11973

RHIC CONTROLS WIRING DIAGRAM
SERVICE BLDG. RACK R8B06
POWER DISTRIBUTION

SIZE D
DRAWING NUMBER 94028559
REV. A

MATERIAL: ——— SCALE: NA WEIGHT: – SHEET 1 OF 52

*AUTOCAD

REV.	ZONE	ECN NO.	DATE	BY	CKR	APP.

Controls 8/30/99 9:21 AM 8559_02.dwg

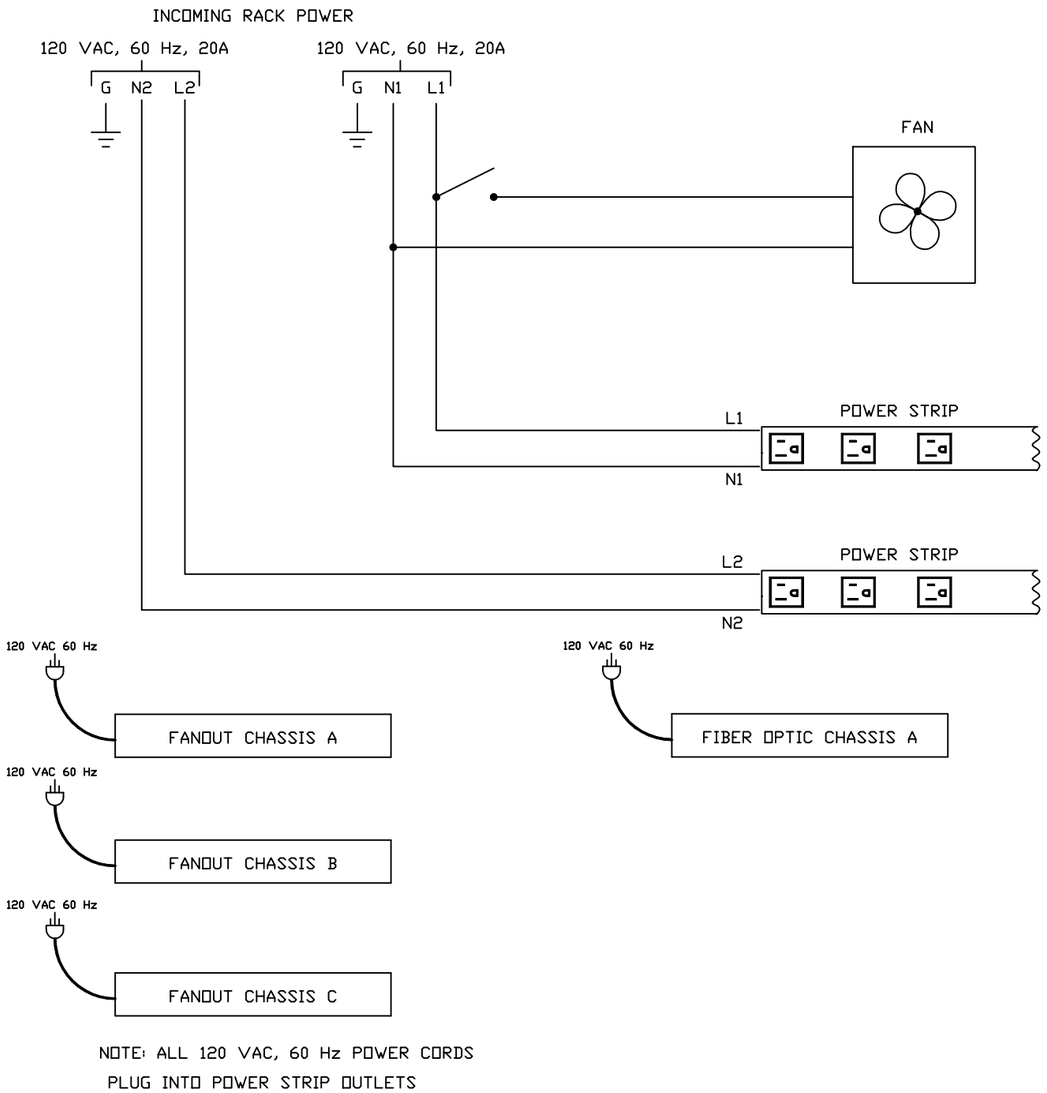

NOTE: ALL 120 VAC, 60 Hz POWER CORDS
PLUG INTO POWER STRIP OUTLETS

RACK R08B05

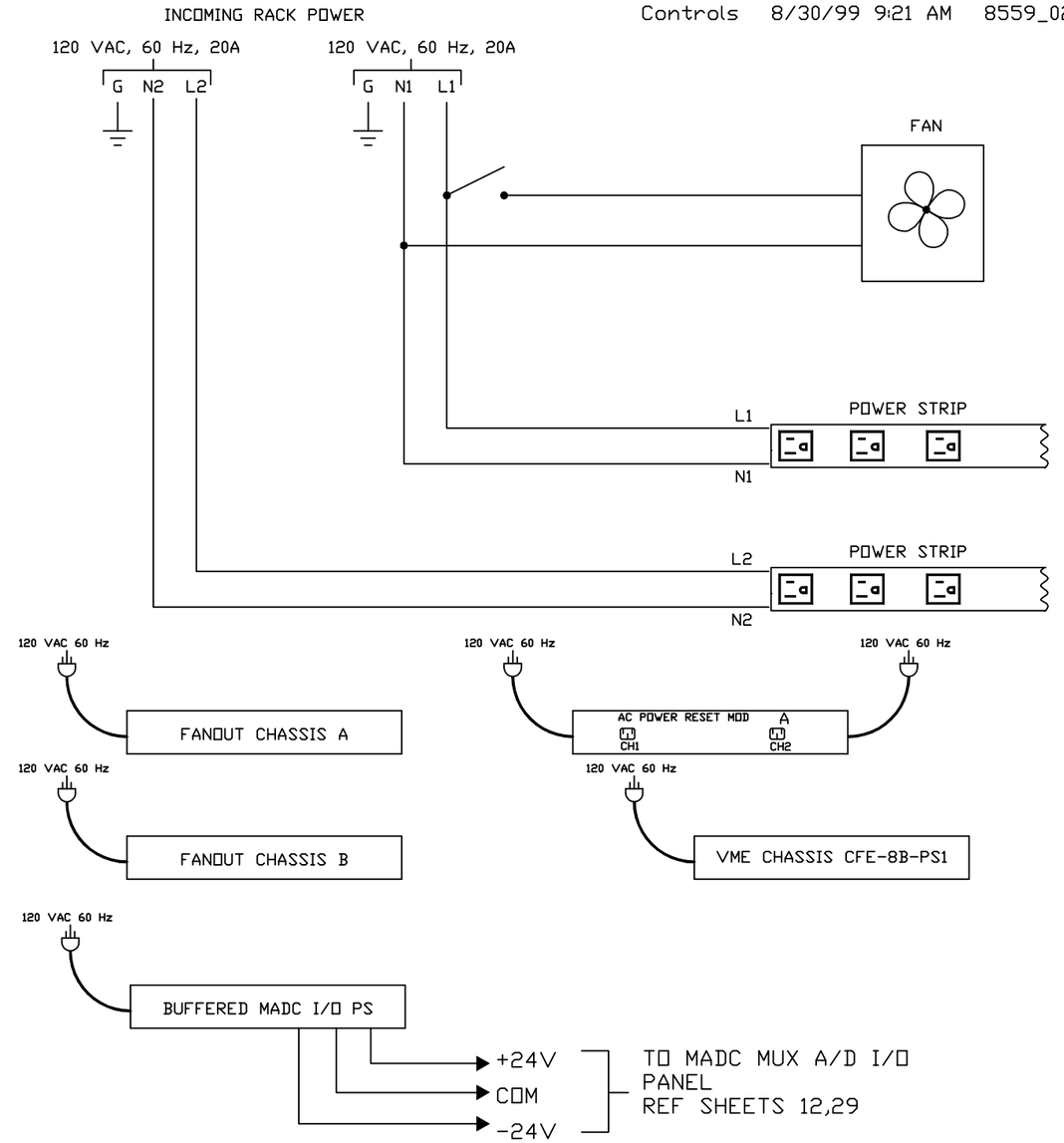

NOTE: ALL 120 VAC, 60 Hz POWER CORDS
PLUG INTO POWER STRIP OUTLETS

RACK R08B04

-3	-2	-1	REF DESIGNATOR	ITEM NO.	DESCRIPTION	MAT'L. DWG NO./BNL NO.
QTY REQD						

INTERPRET IN GENERAL ACCORDANCE WITH ASME Y14.24M-1989

UNLESS OTHERWISE SPECIFIED DIMENSIONS ARE IN INCHES

DECIMAL TOLERANCES
.X ±.030
.XX ±.015
.XXX ±.005
ANGULAR TOLERANCE ± .5°

OUTSTANDING ECN

NA FINISH

BREAK SHARP EDGES
MAX. XX MIN. XX

Q.A. CATEGORY A-3		DATE	BROOKHAVEN NATIONAL LABORATORY
DRAWN BY	Ed Koropsak	6/5/98	UPTON, N.Y. 11973
CHECKED BY			RHIC CONTROLS WIRING DIAGRAM
DESIGN APPROVAL			SERVICE BLDG. 1008B RACK R08B05, R08B04
ENGINEER APPROVAL	R. MICHNOFF	6/5/98	POWER DISTRIBUTION
SUPVR. APPROVAL			
NEXT ASSEMBLY			SIZE D — 94028559 — REV. A
			DRAWING NUMBER
			MATERIAL: ——— SCALE: NA WEIGHT: – SHEET 2 OF 52

*AUTOCAD

REV.	ZONE	ECN NO.	DATE	BY	CKR	APP.

Controls 8/30/99 9:25 AM 8559_03.dwg

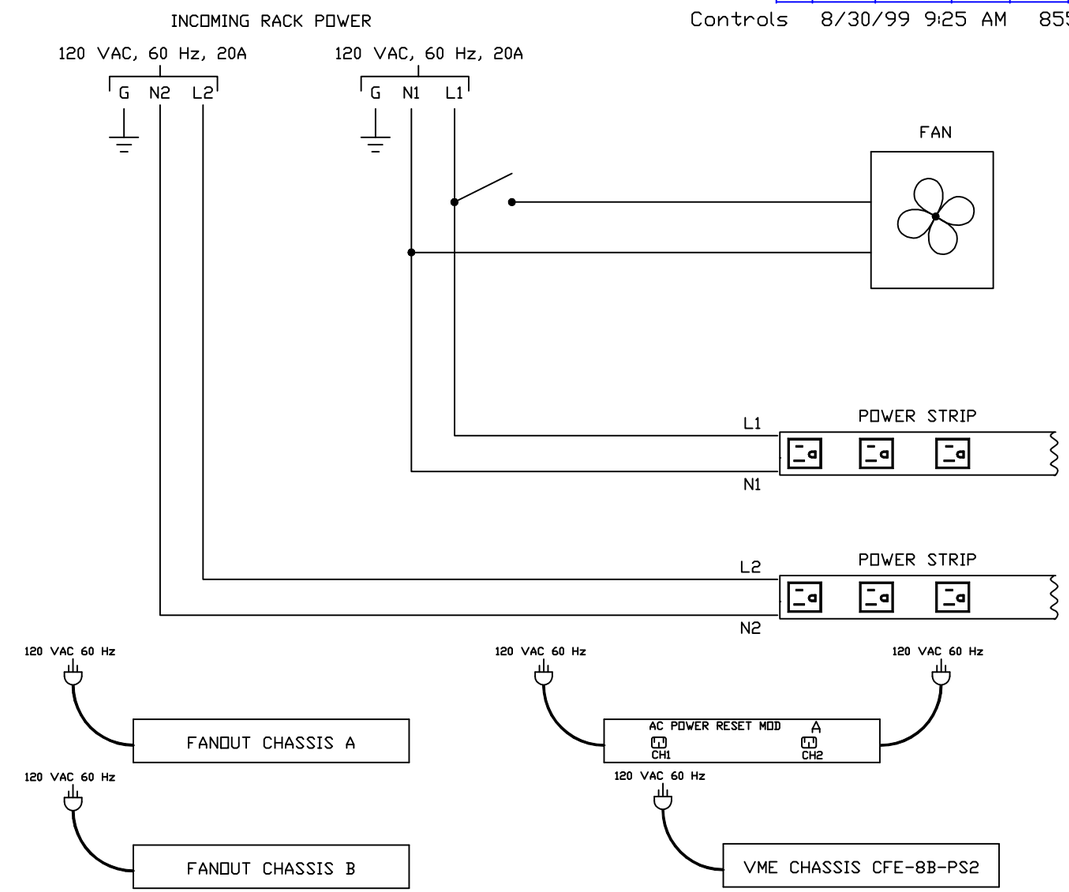

NOTE: ALL 120 VAC, 60 Hz POWER CORDS
PLUG INTO POWER STRIP OUTLETS EXCEPT FOR 6U VME CHASSIS

RACK R08B03

-3	-2	-1	REF DESIGNATOR	ITEM NO.	DESCRIPTION	MAT'L. DWG NO./BNL NO.
QTY REQD						

INTERPRET IN GENERAL ACCORDANCE WITH ASME Y14.24M-1989

UNLESS OTHERWISE SPECIFIED DIMENSIONS ARE IN INCHES

DECIMAL TOLERANCES
.X ±.030
.XX ±.015
.XXX ±.005
ANGULAR TOLERANCE ± .5°

NA FINISH

BREAK SHARP EDGES MAX. XX MIN. XX

OUTSTANDING ECN

Q.A. CATEGORY A-3		DATE
DRAWN BY	Ed Koropsak	6/5/98
CHECKED BY		
DESIGN APPROVAL		
ENGINEER APPROVAL	R. MICHNOFF	6/5/98
SUPVR. APPROVAL		

NEXT ASSEMBLY

BROOKHAVEN NATIONAL LABORATORY
UPTON, N.Y. 11973

RHIC CONTROLS WIRING DIAGRAM
SERVICE BLDG. 1008B RACK R08B03
POWER DISTRIBUTION

SIZE D | DRAWING NUMBER 94028559 | REV. A

MATERIAL: ——— SCALE: NA WEIGHT: – SHEET 3 OF 52

*AUTOCAD

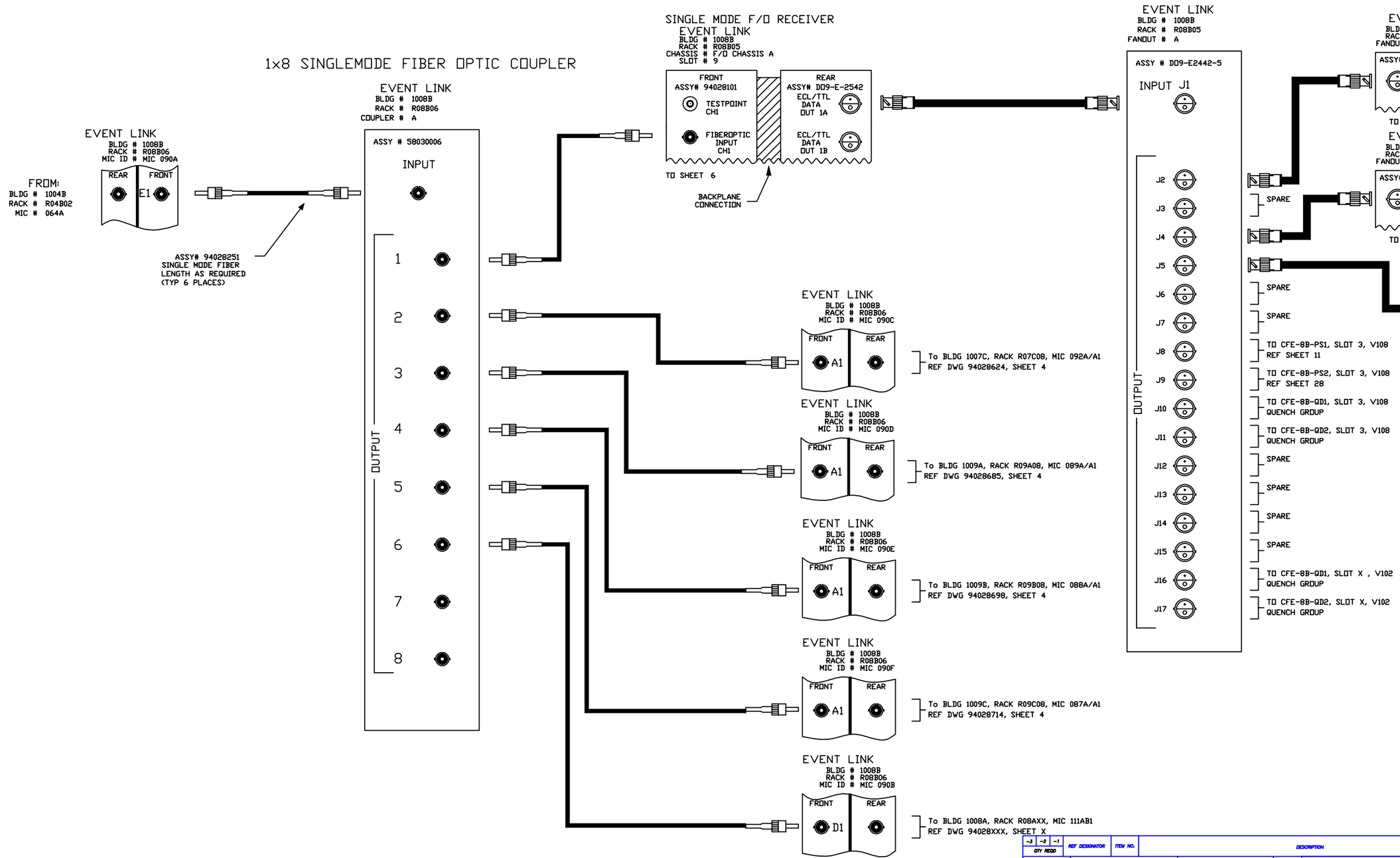

-3	-2	-1	REF DESIGNATOR	ITEM NO.	DESCRIPTION	MAT'L DWG NO./INL NO.
QTY REQD						

INTERPRET IN GENERAL ACCORDANCE WITH ASME Y14.24M-1989

UNLESS OTHERWISE SPECIFIED DIMENSIONS ARE IN INCHES

DECIMAL TOLERANCES
.X ±.030
.XX ±.015
.XXX ±.005
ANGULAR TOLERANCE
± .5°

FINISH: NA

BREAK SHARP EDGES
MAX. XX MIN. XX

OUTSTANDING ECN

Q.A. CATEGORY A-3		DATE
DRAWN BY	Ed Koropsak	6/5/98
CHECKED BY		
DESIGN APPROVAL		
ENGINEER APPROVAL	R. MICHNOFF	6/5/98
SUPVR. APPROVAL		

NEXT ASSEMBLY

BROOKHAVEN NATIONAL LABORATORY
UPTON, N.Y. 11973

RHIC CONTROLS WIRING DIAGRAM
SERVICE BLDG 1008B
EVENT LINK

SIZE D | DRAWING NUMBER 94028559 | REV. A

MATERIAL: ——— SCALE: NA WEIGHT: – SHEET 4 OF 52

*AUTOCAD

REV.	ZONE	ECN NO.	DATE	BY	CKR	APP.

CONTROLS- 5/9/01 9:36 AM 8559_05.dwg

EVENT LINK FANOUT MODULE

BLDG # 1008B
RACK # R08B04
FANOUT # A

FROM SHEET 4
ASSY # D09-E2442-5

OUTPUT

J2	TO CFE-8B-PS1, SLOT 21, V120 REF SHEET 51
J3	To CFE-8B-PS1, SLOT 4, V113 REF SHEET 12
J4	TO CFE-8B-PS1, SLOT 6, V113 REF SHEET 12
J5	SPARE
J6	TO CFE-8B-PS1, SLOT 17, T215 REF SHEET 22
J7	TO CFE-8B-PS1, SLOT 16, T215 REF SHEET 21
J8	TO CFE-8B-PS1, SLOT 15, T215 REF SHEET 20
J9	To CFE-8B-PS1, SLOT 14, T115 REF SHEET 19
J10	To CFE-8B-PS1, SLOT 13, T115 REF SHEET 18
J11	To CFE-8B-PS1, SLOT 12, T115 REF SHEET 17
J12	To CFE-8B-PS1, SLOT 11, T115 REF SHEET 16
J13	To CFE-8B-PS1, SLOT 10, T115 REF SHEET 15
J14	To CFE-8B-PS1, SLOT 9, T115 REF SHEET 14
J15	To CFE-8B-PS1, SLOT 8, T115 REF SHEET 13
J16	SPARE
J17	SPARE

EVENT LINK FANOUT MODULE

BLDG # 1008B
RACK # R08B03
FANOUT # A

FROM SHEET 4
ASSY # D09-E2442-5

OUTPUT

J2	To CFE-8B-PS2, SLOT 20, V102 REF SHEET 49
J3	To CFE-8B-PS2, SLOT 4, V113 REF SHEET 29
J4	SPARE
J5	SPARE
J6	TO CFE-8B-PS2, SLOT 17, T215 REF SHEET 39
J7	TO CFE-8B-PS1, SLOT 16, T215 REF SHEET 38
J8	TO CFE-8B-PS1, SLOT 15, T215 REF SHEET 37
J9	To CFE-8B-PS2, SLOT 14, T115 REF SHEET 36
J10	To CFE-8B-PS2, SLOT 13, T115 REF SHEET 35
J11	To CFE-8B-PS2, SLOT 12, T115 REF SHEET 34
J12	To CFE-8B-PS2, SLOT 11, T115 REF SHEET 33
J13	To CFE-8B-PS2, SLOT 10, T115 REF SHEET 32
J14	To CFE-8B-PS2, SLOT 9, T115 REF SHEET 31
J15	To CFE-8B-PS2, SLOT 8, T115 REF SHEET 30
J16	SPARE
J17	SPARE

EVENT LINK FANOUT MODULE

BLDG # 1008B
RACK # R08B17
FANOUT # A

FROM SHEET 4
ASSY # D09-E2442-5

OUTPUT

J2	To CFE-8B-BLM1, SLOT 3, V108
J3	To CFE-8B-BLM1, SLOT 6, V113
J4	To CFE-8B-BLM1, SLOT 13, V118
J5	To CFE-8B-BLM2, SLOT 3, V108
J6	To CFE-8B-BLM2, SLOT 6, V113
J7	To CFE-8B-BLM2, SLOT 13, V118
J8	To CFE-8B-BPM1, SLOT 3, V108
J9	To CFE-8B-SCRAPER, SLOT 3, V108
J10	SPARE
J11	SPARE
J12	SPARE
J13	SPARE
J14	SPARE
J15	SPARE
J16	SPARE
J17	SPARE

-3	-2	-1	REF DESIGNATOR	ITEM NO.	DESCRIPTION	MAT'L. DWG NO.,BINL NO.
QTY REQD						

INTERPRET IN GENERAL ACCORDANCE WITH ASME Y14.24M-1989

UNLESS OTHERWISE SPECIFIED DIMENSIONS ARE IN INCHES

DECIMAL TOLERANCES
.X ±.030
.XX ±.015
.XXX ±.005
ANGULAR TOLERANCE
± .5°

OUTSTANDING ECN

NA FINISH

BREAK SHARP EDGES
MAX. XX MIN. XX

Q.A. CATEGORY A-3		DATE
DRAWN BY	Ed Koropsak	6/5/98
CHECKED BY		
DESIGN APPROVAL		
ENGINEER APPROVAL	R. MICHNOFF	6/5/98
SUPVR. APPROVAL		

NEXT ASSEMBLY

BROOKHAVEN NATIONAL LABORATORY
UPTON, N.Y. 11973

RHIC CONTROLS WIRING DIAGRAM
1008B
EVENT LINK

SIZE D
DRAWING NUMBER 94028559
REV. A

MATERIAL: ——— SCALE: NA WEIGHT: – SHEET 5 of 52

*AUTOCAD

REV.	ZONE	ECN NO.	DATE	BY	CKR	APP.

Controls 8/30/99 10:24 AM 8559_06.dwg

1x8 SINGLEMODE FIBER OPTIC COUPLER

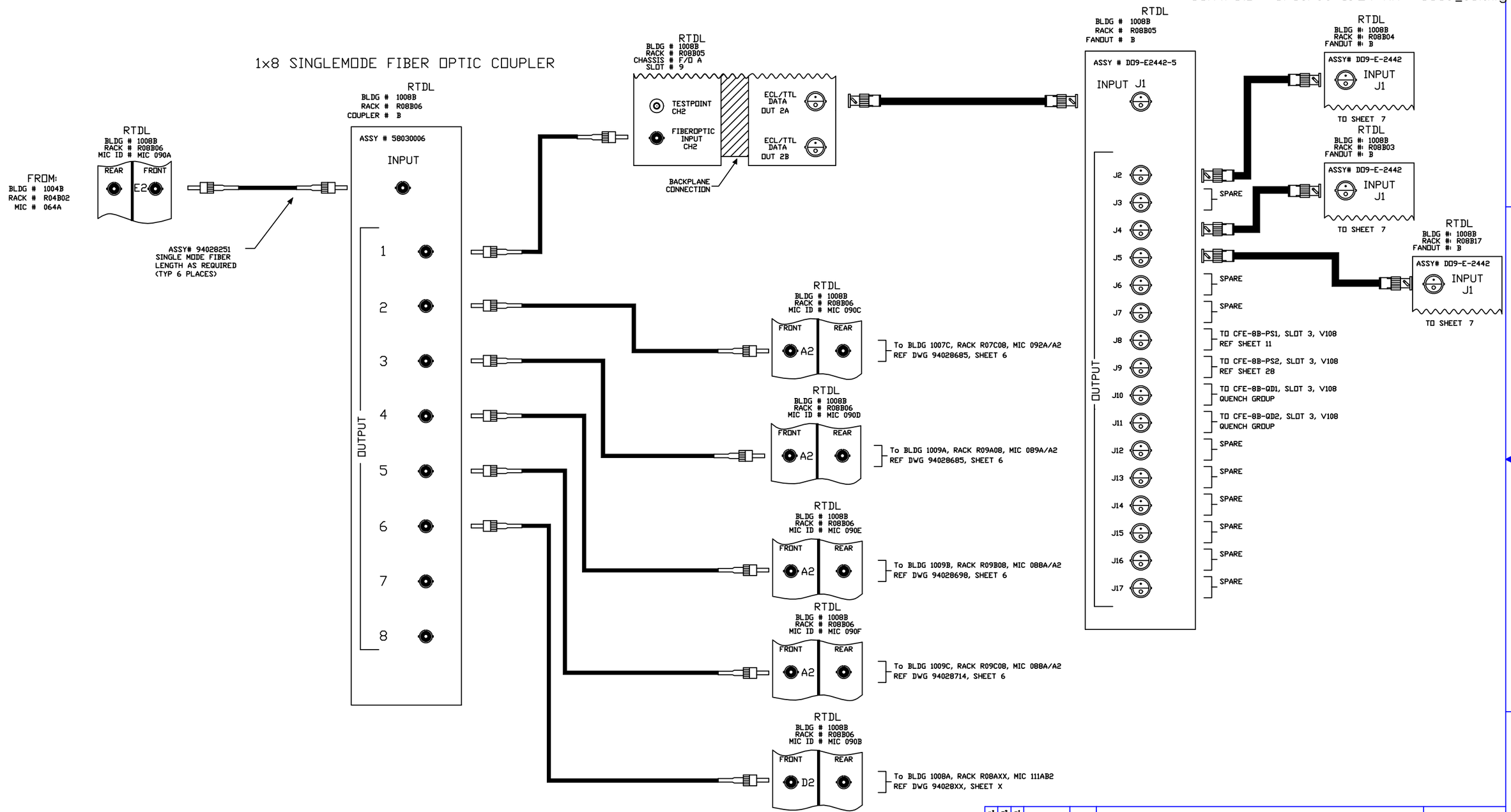

-3	-2	-1	REF DESIGNATOR	ITEM NO.	DESCRIPTION	MAT'L DWG NO./INL NO.
QTY REQD						

INTERPRET IN GENERAL ACCORDANCE WITH ASME Y14.24M-1989

UNLESS OTHERWISE SPECIFIED DIMENSIONS ARE IN INCHES

DECIMAL TOLERANCES
.X ±.030
.XX ±.015
.XXX ±.005
ANGULAR TOLERANCE
± .5°

NA FINISH

BREAK SHARP EDGES
MAX. XX MIN. XX

OUTSTANDING ECN

Q.A. CATEGORY A-3		DATE
DRAWN BY	Ed Koropsak	6/5/98
CHECKED BY		
DESIGN APPROVAL		
ENGINEER APPROVAL	R. MICHNOFF	6/5/98
SUPVR. APPROVAL		

NEXT ASSEMBLY

BROOKHAVEN NATIONAL LABORATORY
UPTON, N.Y. 11973

RHIC CONTROLS WIRING DIAGRAM
SERVICE BLDG 1008B
RTDL

SIZE D | DRAWING NUMBER 94028559 | REV. A

MATERIAL: ——— SCALE: NA WEIGHT: – SHEET 6

*AUTOCAD

REV.	ZONE	ECN NO.	DATE	BY	CKR	APP.

CONTROLS- 3/15/01 3:38 PM 8559_07.dwg

RTDL FANOUT MODULE

BLDG # 1008B
RACK # R08B04
FANOUT # B

FROM SHEET 6
ASSY # DD9-E2442-5

OUTPUT

J2	SPARE
J3	SPARE
J4	SPARE
J5	SPARE
J6	TO CFE-8B-PS1, SLOT 17, T215 REF SHEET 22
J7	TO CFE-8B-PS1, SLOT 16, T215 REF SHEET 21
J8	TO CFE-8B-PS1, SLOT 15, T215 REF SHEET 20
J9	To CFE-8B-PS1, SLOT 14, T115 REF SHEET 19
J10	To CFE-8B-PS1, SLOT 13, T115 REF SHEET 18
J11	To CFE-8B-PS1, SLOT 12, T115 REF SHEET 17
J12	To CFE-8B-PS1, SLOT 11, T115 REF SHEET 16
J13	To CFE-8B-PS1, SLOT 10, T115 REF SHEET 15
J14	To CFE-8B-PS1, SLOT 9, T115 REF SHEET 14
J15	To CFE-8B-PS1, SLOT 8, T115 REF SHEET 13
J16	SPARE
J17	SPARE

RTDL FANOUT MODULE

BLDG # 1008B
RACK # R08B03
FANOUT # B

FROM SHEET 6
ASSY # DD9-E2442-5

OUTPUT

J2	SPARE
J3	SPARE
J4	SPARE
J5	SPARE
J6	TO CFE-8B-PS2, SLOT 17, T215 REF SHEET 39
J7	TO CFE-8B-PS2, SLOT 16, T215 REF SHEET 38
J8	TO CFE-8B-PS2, SLOT 15, T215 REF SHEET 37
J9	To CFE-8B-PS2, SLOT 14, T115 REF SHEET 36
J10	To CFE-8B-PS2, SLOT 13, T115 REF SHEET 35
J11	To CFE-8B-PS2, SLOT 12, T115 REF SHEET 34
J12	To CFE-8B-PS2, SLOT 11, T115 REF SHEET 33
J13	To CFE-8B-PS2, SLOT 10, T115 REF SHEET 32
J14	To CFE-8B-PS2, SLOT 9, T115 REF SHEET 31
J15	To CFE-8B-PS2, SLOT 8, T115 REF SHEET 30
J16	SPARE
J17	SPARE

RTDL FANOUT MODULE

BLDG # 1008B
RACK # R08B17
FANOUT # B

FROM SHEET 6
ASSY # DD9-E2442-5

OUTPUT

J2	TO CFE-8B-BLM1, SLOT 3, V108
J3	TO CFE-8B-BLM2, SLOT 3, V108
J4	TO CFE-8B-BPM1, SLOT 3, V108
J5	TO CFE-8B-SCRAPER, SLOT 3, V108
J6	SPARE
J7	SPARE
J8	SPARE
J9	SPARE
J10	SPARE
J11	SPARE
J12	SPARE
J13	SPARE
J14	SPARE
J15	SPARE
J16	SPARE
J17	SPARE

-3	-2	-1	REF DESIGNATOR	ITEM NO.	DESCRIPTION	MAT'L. DWG NO.,BINL NO.
QTY REQD						

INTERPRET IN GENERAL ACCORDANCE WITH ASME Y14.24M-1989

UNLESS OTHERWISE SPECIFIED DIMENSIONS ARE IN INCHES

DECIMAL TOLERANCES
.X ±.030
.XX ±.015
.XXX ±.005
ANGULAR TOLERANCE ± .5°

OUTSTANDING ECN

NA FINISH

BREAK SHARP EDGES
MAX. XX MIN. XX

Q.A. CATEGORY A-3		DATE
DRAWN BY	Ed Koropsak	6/5/98
CHECKED BY		
DESIGN APPROVAL		
ENGINEER APPROVAL	R. MICHNOFF	6/5/98
SUPVR. APPROVAL		

NEXT ASSEMBLY

BROOKHAVEN NATIONAL LABORATORY
UPTON, N.Y. 11973

RHIC CONTROLS WIRING DIAGRAM
1008B

REAL TIME DATA LINK

SIZE D
94028559
DRAWING NUMBER
REV. A

MATERIAL: ——— SCALE: NA WEIGHT: – SHEET 7 OF 52

*AUTOCAD

REV.	ZONE	ECN NO.	DATE	BY	CKR	APP.

Controls 8/30/99 10:42 AM 8559_08.dwg

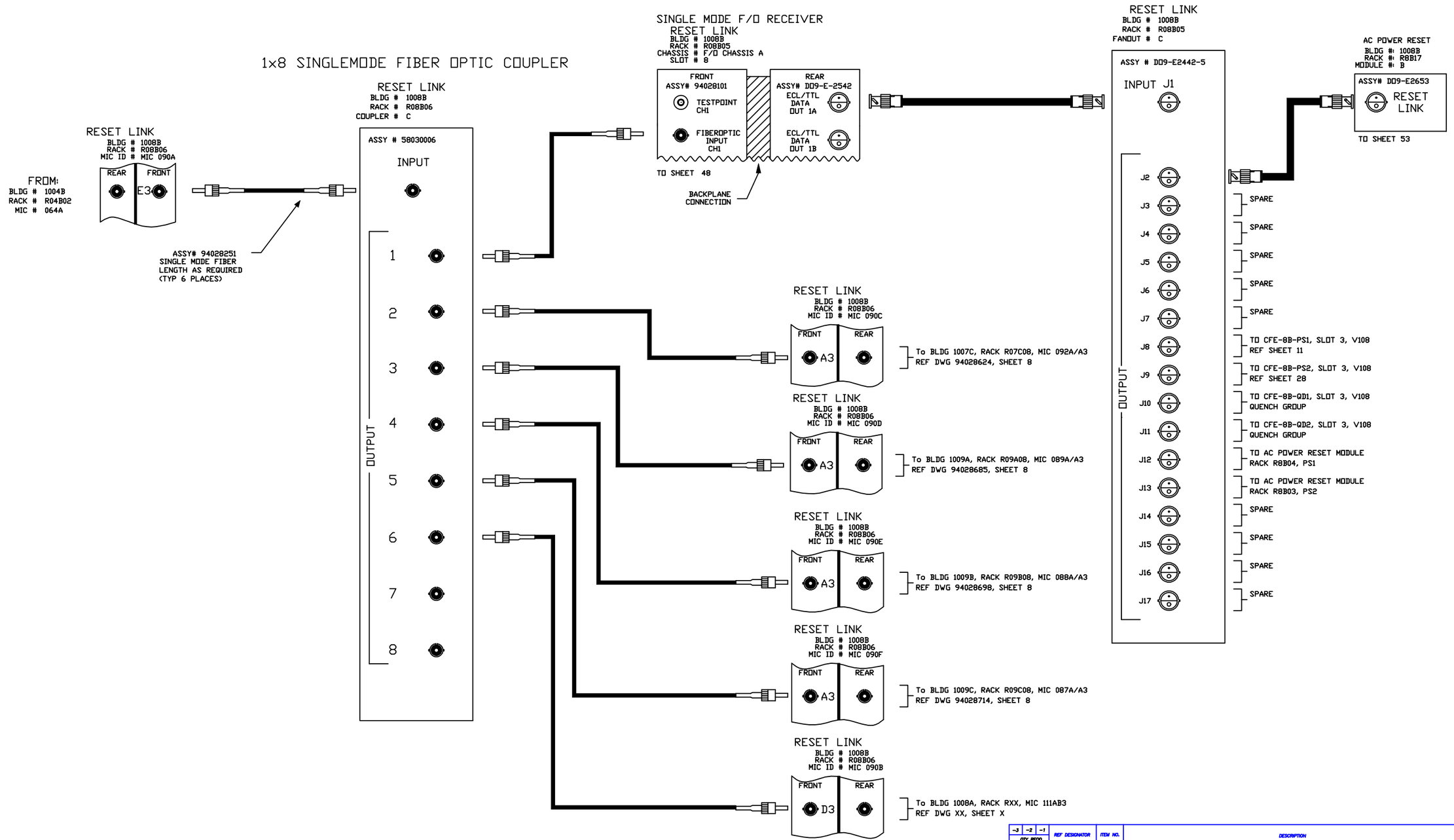

-3	-2	-1	REF DESIGNATOR	ITEM NO.	DESCRIPTION	MAT'L DWG NO./INL NO.
QTY REQD						

INTERPRET IN GENERAL ACCORDANCE WITH ASME Y14.24M-1989

UNLESS OTHERWISE SPECIFIED DIMENSIONS ARE IN INCHES

DECIMAL TOLERANCES
.X ±.030
.XX ±.015
.XXX ±.005
ANGULAR TOLERANCE
± .5°

NA FINISH — BREAK SHARP EDGES — MAX. XX MIN. XX

OUTSTANDING ECN

Q.A. CATEGORY A-3		DATE
DRAWN BY	Ed Koropsak	6/5/98
CHECKED BY		
DESIGN APPROVAL		
ENGINEER APPROVAL	R. MICHNOFF	6/5/98
SUPVR. APPROVAL		

NEXT ASSEMBLY

BROOKHAVEN NATIONAL LABORATORY
ASSOCIATED UNIVERSITIES, INC.
UPTON, N.Y. 11973

RHIC CONTROLS WIRING DIAGRAM
SERVICE BLDG 1008B
RESET LINK

SIZE D — 94028559 — REV. A
DRAWING NUMBER

MATERIAL: ——— SCALE: NA WEIGHT: – SHEET 8

1 *AUTOCAD

CONTROLS- 3/15/01 3:39 PM 8559_09.dwg

REV.	ZONE	ECN NO.	DATE	BY	CKR	APP.

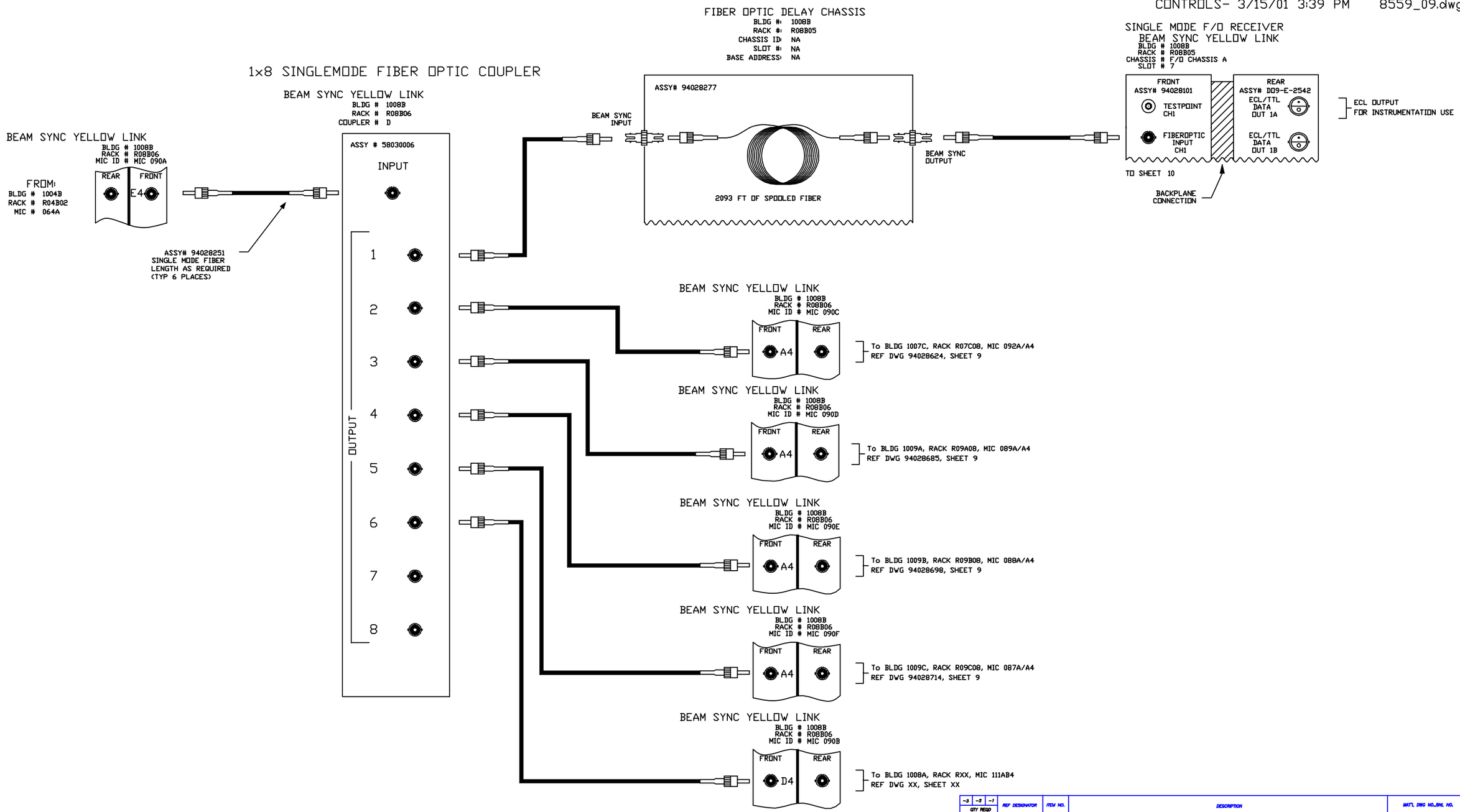

-3	-2	-1	REF DESIGNATOR	ITEM NO.	DESCRIPTION	MAT'L. DWG NO.,BINL NO.
QTY REQD						

INTERPRET IN GENERAL ACCORDANCE WITH ASME Y14.24M-1989

UNLESS OTHERWISE SPECIFIED DIMENSIONS ARE IN INCHES

DECIMAL TOLERANCES
.X ±.030
.XX ±.015
.XXX ±.005
ANGULAR TOLERANCE
± .5°

OUTSTANDING ECN

NA FINISH

BREAK SHARP EDGES
MAX. XX MIN. XX

Q.A. CATEGORY	A-3	DATE
DRAWN BY	Ed Koropsak	6/5/98
CHECKED BY		
DESIGN APPROVAL		
ENGINEER APPROVAL	R. MICHNOFF	6/5/98
SUPVR. APPROVAL		

NEXT ASSEMBLY

BROOKHAVEN NATIONAL LABORATORY
UPTON, N.Y. 11973

RHIC CONTROLS WIRING DIAGRAM
SERVICE BLDG 1008B

BEAM SYNC YELLOW LINK

SIZE D | DRAWING NUMBER 94028559 | REV. A

MATERIAL: ——— SCALE: NA WEIGHT: – SHEET 9 OF 52

*AUTOCAD

REV.	ZONE	ECN NO.	DATE	BY	CKR	APP.

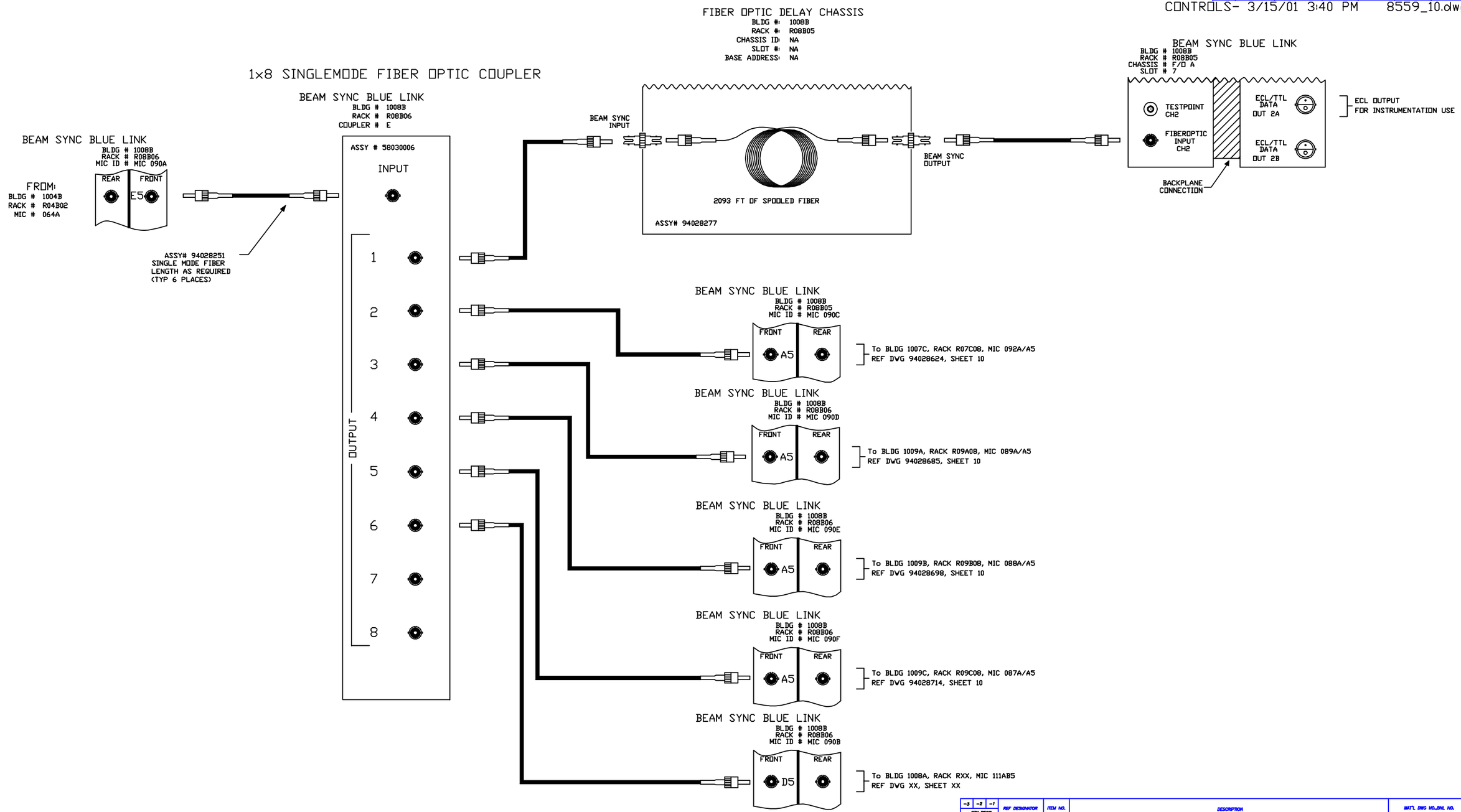

-3	-2	-1	REF DESIGNATOR	ITEM NO.	DESCRIPTION	MAT'L. DWG NO.,BNL NO.
QTY REQD						

INTERPRET IN GENERAL ACCORDANCE WITH ASME Y14.24M-1989	Q.A. CATEGORY A-3	DATE	BROOKHAVEN NATIONAL LABORATORY
	DRAWN BY Ed Koropsak	6/5/98	UPTON, N.Y. 11973
UNLESS OTHERWISE SPECIFIED DIMENSIONS ARE IN INCHES	CHECKED BY		RHIC CONTROLS WIRING DIAGRAM
DECIMAL TOLERANCES .X ±.030 .XX ±.015 .XXX ±.005 ANGULAR TOLERANCE ± .5°	DESIGN APPROVAL		SERVICE BLDG 1008B
	ENGINEER APPROVAL R. MICHNOFF	6/5/98	BEAM SYNC BLUE LINK
	SUPVR. APPROVAL		SIZE D — 94028559 — REV. A
OUTSTANDING ECN	NA FINISH	BREAK SHARP EDGES MAX. XX MIN. XX	NEXT ASSEMBLY — DRAWING NUMBER
			MATERIAL: ——— SCALE: NA WEIGHT: – SHEET 10

*AUTOCAD

REV.	ZONE	ECN NO.	DATE	BY	CKR	APP.

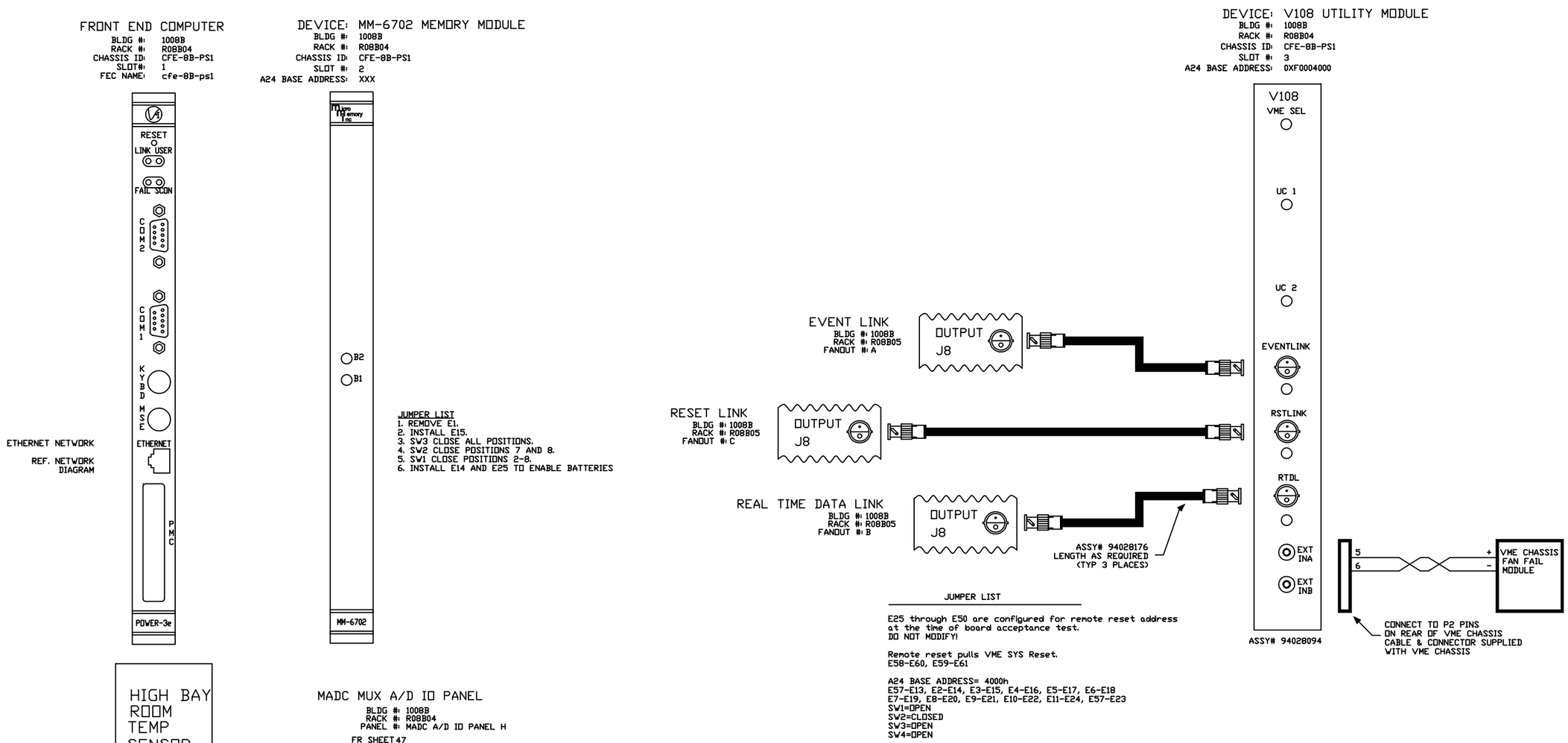

-3	-2	-1	REF DESIGNATOR	ITEM NO.	DESCRIPTION	MAT'L. DWG NO.,BNL NO.
QTY REQD						

INTERPRET IN GENERAL ACCORDANCE WITH ASME Y14.24M-1989	Q.A. CATEGORY A-3	DATE	BROOKHAVEN NATIONAL LABORATORY
	DRAWN BY Venegas	8/30/99	UPTON, N.Y. 11973
UNLESS OTHERWISE SPECIFIED DIMENSIONS ARE IN INCHES	CHECKED BY		RHIC CONTROLS WIRING DIAGRAM
DECIMAL TOLERANCES .X ±.030 .XX ±.015 .XXX ±.005 ANGULAR TOLERANCE ± .5°	DESIGN APPROVAL		SERV BLDG 1008B, VME CHASSIS CFE-8B-PS1
	ENGINEER APPROVAL R. MICHNOFF	10/21/97	CPU/MEMORY /V108 UTIL MODULE
	SUPVR. APPROVAL		SIZE D — DRAWING NUMBER 94028559 — REV. A
OUTSTANDING ECN	NA FINISH	BREAK SHARP EDGES MAX. XX MIN. XX	NEXT ASSEMBLY
			MATERIAL: — SCALE: NA WEIGHT: — SHEET 11

*AUTOCAD

REV.	ZONE	ECN NO.	DATE	BY	CKR	APP.

CONTROLS- 5/9/01 10:18 AM 8559_12.dwg

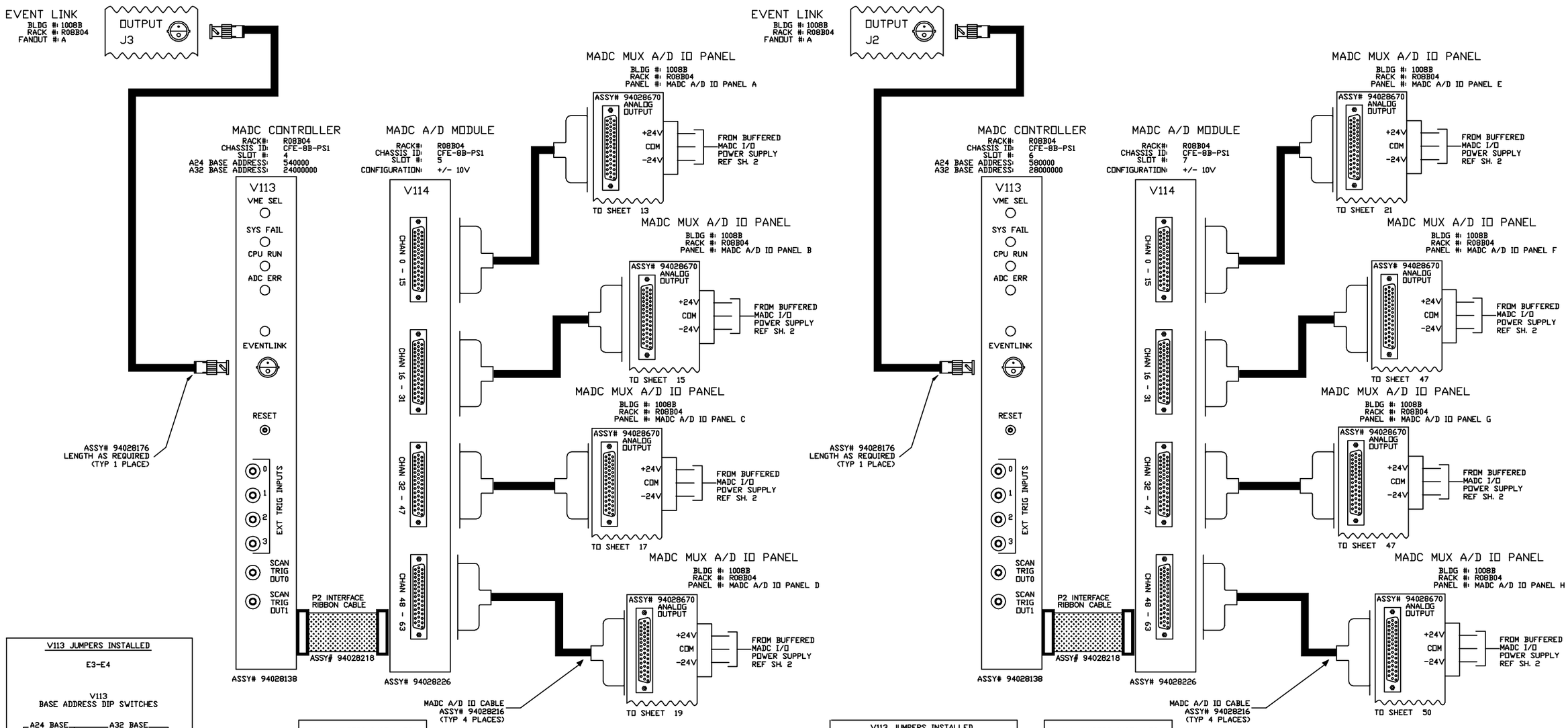

-3	-2	-1	REF DESIGNATOR	ITEM NO.	DESCRIPTION	MAT'L DWG NO.,BAR NO.
QTY REQD						

INTERPRET IN GENERAL ACCORDANCE WITH ASME Y14.24M-1989

UNLESS OTHERWISE SPECIFIED DIMENSIONS ARE IN INCHES

DECIMAL TOLERANCES
.X ±.030
.XX ±.015
.XXX ±.005
ANGULAR TOLERANCE
± .5°

FINISH: NA

BREAK SHARP EDGES
MAX. XX MIN. XX

OUTSTANDING ECN

Q.A. CATEGORY A-3		DATE
DRAWN BY	Ed Koropsak	6/5/98
CHECKED BY		
DESIGN APPROVAL		
ENGINEER APPROVAL	R. MICHNOFF	6/5/98
SUPVR. APPROVAL		

NEXT ASSEMBLY

BROOKHAVEN NATIONAL LABORATORY
UPTON, N.Y. 11973

RHIC CONTROLS WIRING DIAGRAM
1008B, VME CHASSIS CFE-8B-PS1
MADC SYSTEM

SIZE D — DRAWING NUMBER 94028559 — REV. A

MATERIAL: ——— SCALE: FULL WEIGHT: – SHEET 12 OF 52

*AUTOCAD

REV.	ZONE	ECN NO.	DATE	BY	CKR	APP.

Controls 8/30/99 11:30 AM 8559_13.dwg

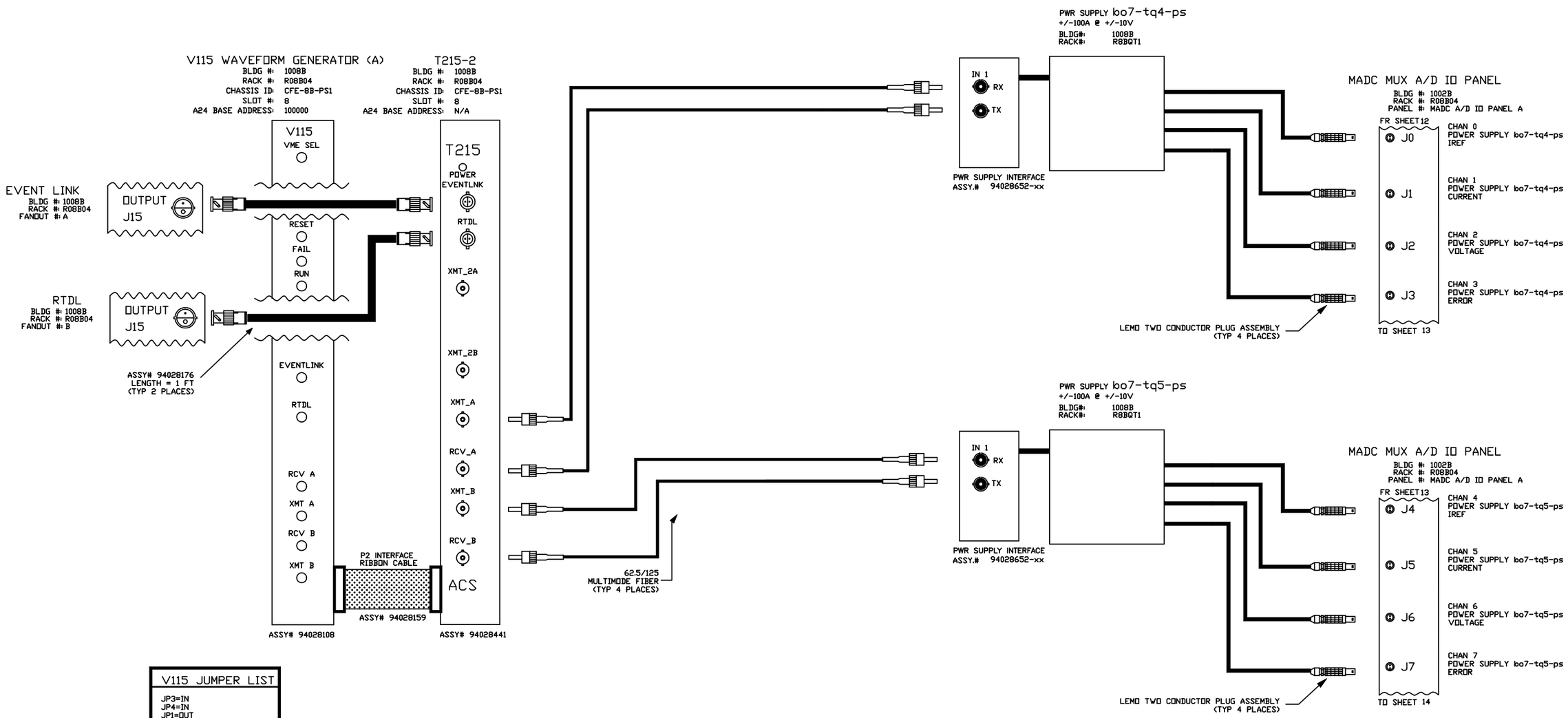

V115 JUMPER LIST
JP3=IN JP4=IN JP1=OUT JP2=OUT
A24 BASE ADDRESS JB1-A23=IN JB1-A22=IN JB1-A21=IN JB1-A20=OUT JB1-A19=IN JB1-A18=IN

-3	-2	-1	REF DESIGNATOR	ITEM NO.	DESCRIPTION	MAT'L DWG NO./BNL NO.
QTY REQD						

INTERPRET IN GENERAL ACCORDANCE WITH ASME Y14.24M-1989

UNLESS OTHERWISE SPECIFIED DIMENSIONS ARE IN INCHES

DECIMAL TOLERANCES
.X ±.030
.XX ±.015
.XXX ±.005
ANGULAR TOLERANCE
± .5°

NA FINISH

BREAK SHARP EDGES
MAX. XX MIN. XX

OUTSTANDING ECN

Q.A. CATEGORY A-3		DATE
DRAWN BY	Ed Koropsak	6/5/98
CHECKED BY		
DESIGN APPROVAL		
ENGINEER APPROVAL	R.MICHNOFF	6/5/98
SUPVR. APPROVAL		

NEXT ASSEMBLY

BROOKHAVEN NATIONAL LABORATORY
UPTON, N.Y. 11973

RHIC CONTROLS WIRING DIAGRAM

BLDG. 1008B, CFE-8B-PS1

bo7-tq4-ps/bo7-tq5-ps

SIZE D | 94028559 | REV. A

DRAWING NUMBER

MATERIAL: ——— SCALE: NA WEIGHT: – SHEET 13 OF 52

1 *AUTOCAD

REV.	ZONE	ECN NO.	DATE	BY	CKR	APP.

Controls 8/30/99 11:32 AM 8559_14.dwg

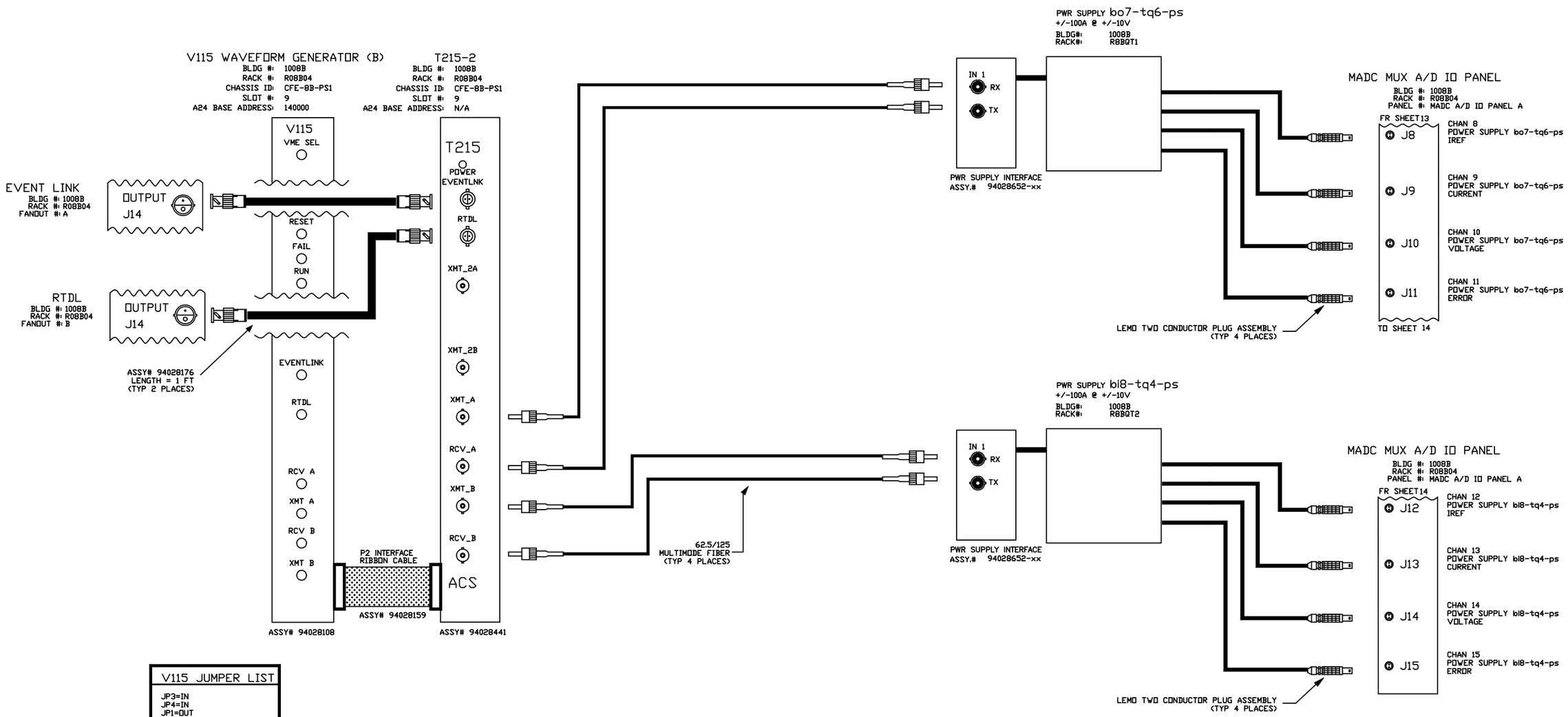

V115 JUMPER LIST
JP3=IN JP4=IN JP1=OUT JP2=OUT
A24 BASE ADDRESS JB1-A23=IN JB1-A22=IN JB1-A21=IN JB1-A20=OUT JB1-A19=IN JB1-A18=OUT

-3	-2	-1	REF DESIGNATOR	ITEM NO.	DESCRIPTION	MAT'L. DWG NO.,SPEC. NO.
QTY REQD						

INTERPRET IN GENERAL ACCORDANCE WITH ASME Y14.24M-1989

UNLESS OTHERWISE SPECIFIED DIMENSIONS ARE IN INCHES

DECIMAL TOLERANCES
.X ±.030
.XX ±.015
.XXX ±.005
ANGULAR TOLERANCE
± .5°

NA FINISH

BREAK SHARP EDGES
MAX. XX MIN. XX

OUTSTANDING ECN

Q.A. CATEGORY A-3		DATE
DRAWN BY	Ed Koropsak	6/5/98
CHECKED BY		
DESIGN APPROVAL		
ENGINEER APPROVAL	R.MICHNOFF	6/5/98
SUPVR. APPROVAL		
NEXT ASSEMBLY		

BROOKHAVEN NATIONAL LABORATORY
UPTON, N.Y. 11973

RHIC CONTROLS WIRING DIAGRAM

BLDG. 1008B, CFE-8B-PS1

bo7-tq6-ps/bi8-tq4-ps

SIZE D — 94028559 — REV. A

DRAWING NUMBER

MATERIAL: ——— SCALE: NA WEIGHT: – SHEET 14 OF 52

*AUTOCAD

REV.	ZONE	ECN NO.	DATE	BY	CKR	APP.

Controls 8/30/99 11:40 AM 8559_15.dwg

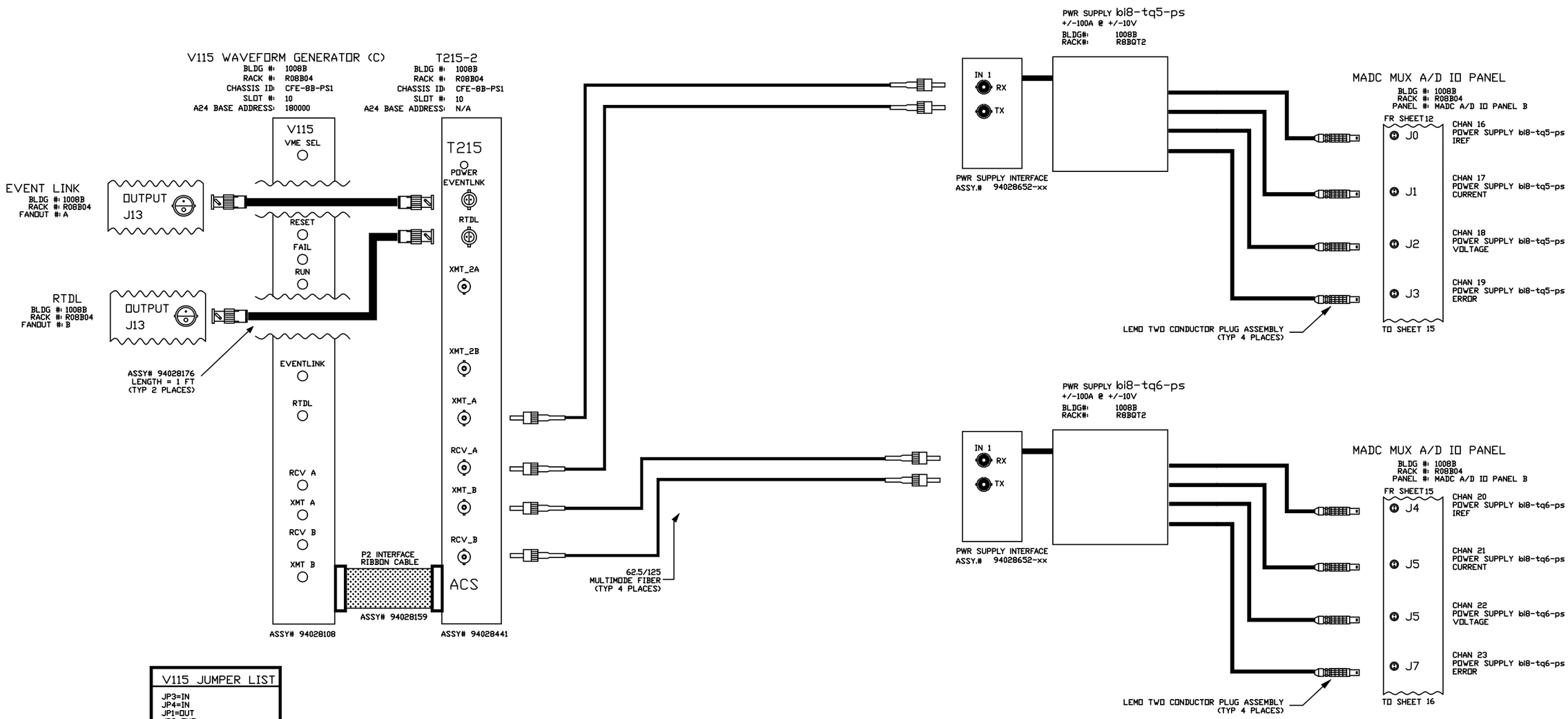

V115 JUMPER LIST
JP3=IN JP4=IN JP1=OUT JP2=OUT
A24 BASE ADDRESS JB1-A23=IN JB1-A22=IN JB1-A21=IN JB1-A20=OUT JB1-A19=OUT JB1-A18=IN

-3	-2	-1	REF DESIGNATOR	ITEM NO.	DESCRIPTION	MAT'L. DWG NO.,SPEC. NO.
QTY REQD						

INTERPRET IN GENERAL ACCORDANCE WITH ASME Y14.24M-1989

UNLESS OTHERWISE SPECIFIED DIMENSIONS ARE IN INCHES

DECIMAL TOLERANCES
.X ±.030
.XX ±.015
.XXX ±.005
ANGULAR TOLERANCE
± .5°

FINISH: NA

BREAK SHARP EDGES
MAX. XX MIN. XX

OUTSTANDING ECN

Q.A. CATEGORY A-3		DATE
DRAWN BY	Ed Koropsak	6/5/98
CHECKED BY		
DESIGN APPROVAL		
ENGINEER APPROVAL	R.MICHNOFF	6/5/98
SUPVR. APPROVAL		
NEXT ASSEMBLY		

BROOKHAVEN NATIONAL LABORATORY
UPTON, N.Y. 11973

RHIC CONTROLS WIRING DIAGRAM

BLDG. 1008B, CFE-8B-PS1

bi8-tq5-ps/bi8-tq6-ps

SIZE D — DRAWING NUMBER 94028559 — REV. A

MATERIAL: ——— SCALE: NA WEIGHT: – SHEET 15

*AUTOCAD

REV.	ZONE	ECN NO.	DATE	BY	CKR	APP.

Controls 8/30/99 11:42 AM 8559_16.dwg

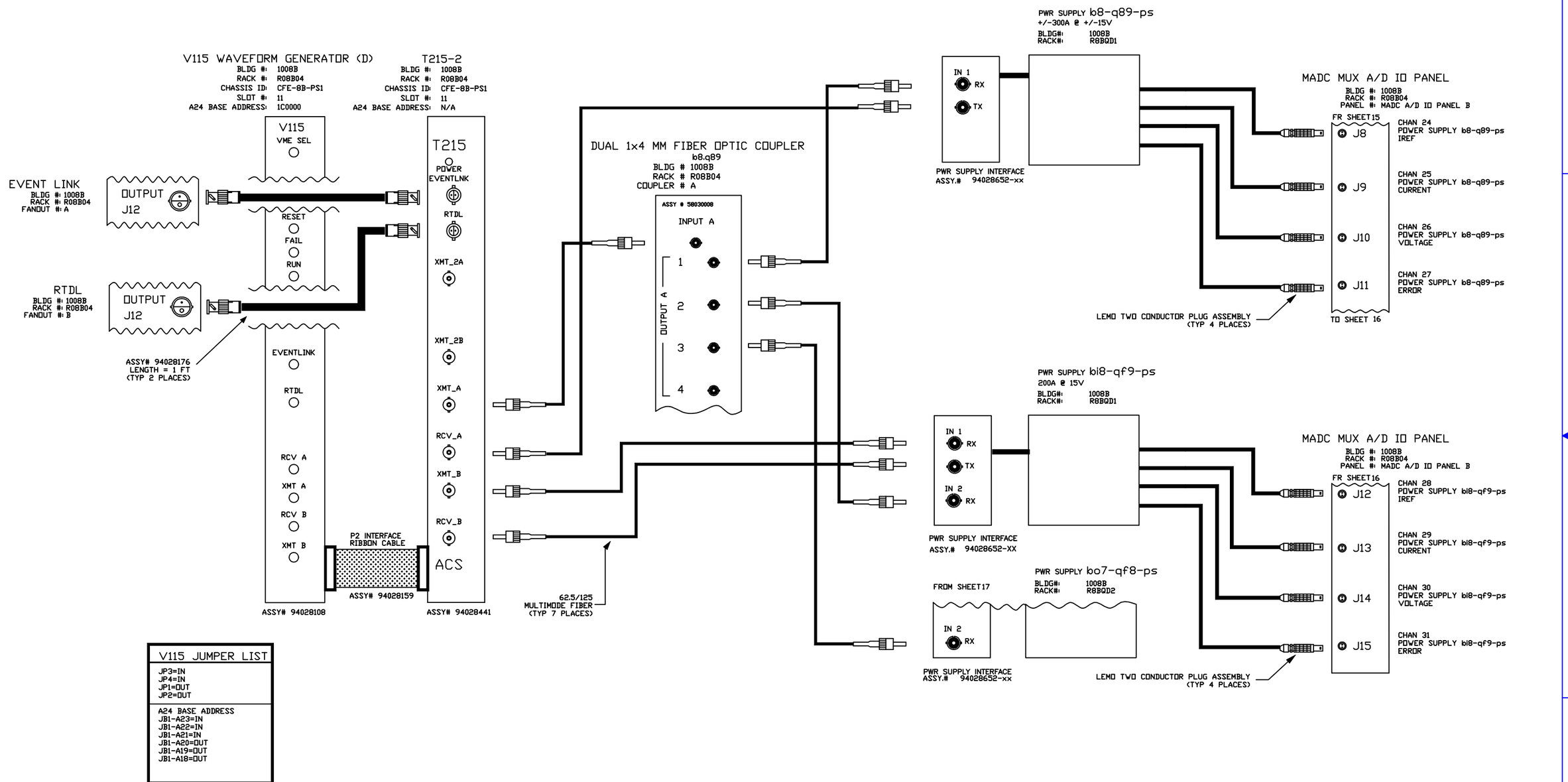

V115 JUMPER LIST
JP3=IN JP4=IN JP1=OUT JP2=OUT
A24 BASE ADDRESS JB1-A23=IN JB1-A22=IN JB1-A21=IN JB1-A20=OUT JB1-A19=OUT JB1-A18=OUT

-3	-2	-1	REF DESIGNATOR	ITEM NO.	DESCRIPTION	MAT'L DWG NO.,BNL NO.
QTY REQD						

INTERPRET IN GENERAL ACCORDANCE WITH ASME Y14.24M-1989

UNLESS OTHERWISE SPECIFIED DIMENSIONS ARE IN INCHES

DECIMAL TOLERANCES .X ±.030 .XX ±.015 .XXX ±.005 ANGULAR TOLERANCE ± .5°

NA FINISH

BREAK SHARP EDGES MAX. XX MIN. XX

OUTSTANDING ECN

Q.A. CATEGORY A-3		DATE
DRAWN BY	Ed Koropsak	6/5/98
CHECKED BY		
DESIGN APPROVAL		
ENGINEER APPROVAL	R.MICHNOFF	6/5/98
SUPVR. APPROVAL		

NEXT ASSEMBLY

BROOKHAVEN NATIONAL LABORATORY
UPTON, N.Y. 11973

RHIC CONTROLS WIRING DIAGRAM

BLDG. 1008B, CFE-8B-PS1

b8-q89-ps/bi8-qf9-ps

SIZE D — DRAWING NUMBER 94028559 — REV. A

MATERIAL: ——— SCALE: NA WEIGHT: – SHEET 16

*AUTOCAD

REV.	ZONE	ECN NO.	DATE	BY	CKR	APP.

Controls 8/30/99 11:44 AM 8559_17.dwg

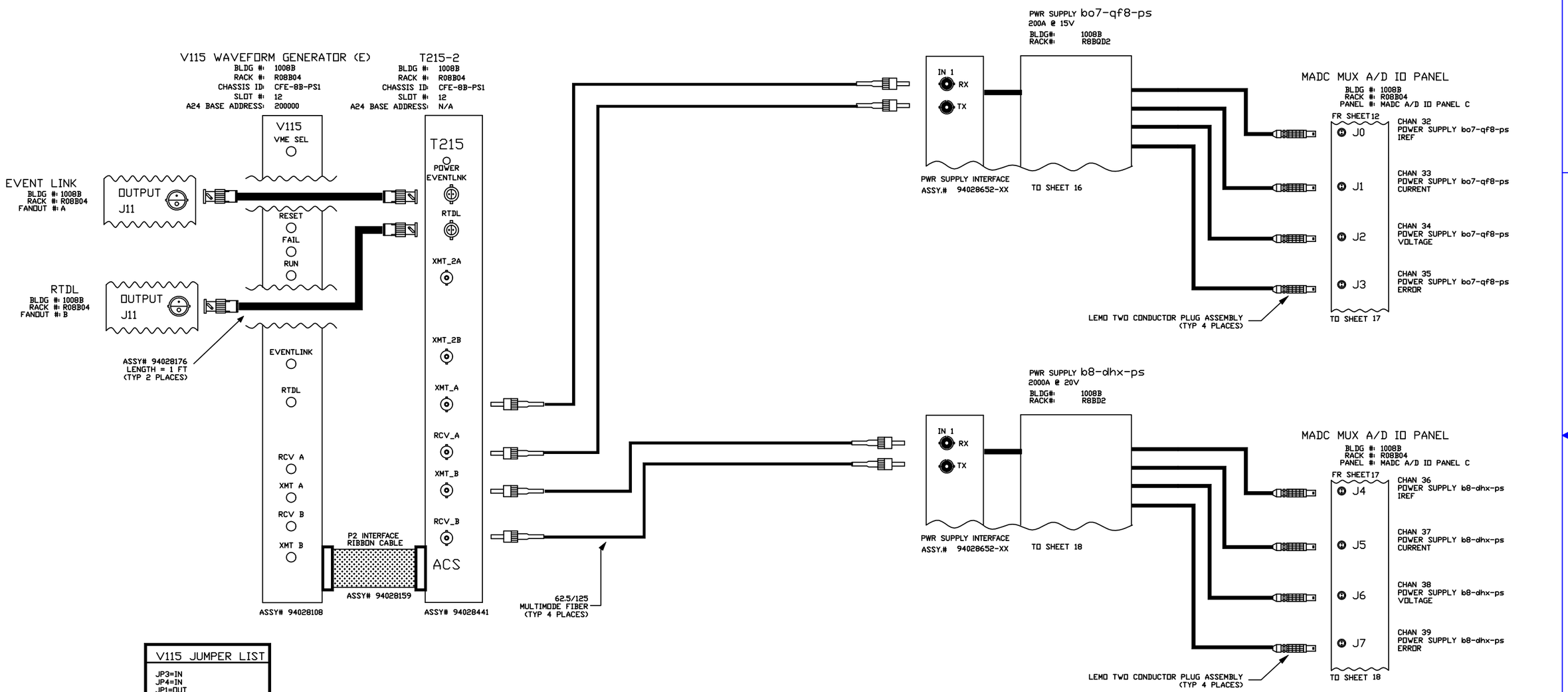

V115 JUMPER LIST
JP3=IN JP4=IN JP1=OUT JP2=OUT
A24 BASE ADDRESS JB1-A23=IN JB1-A22=IN JB1-A21=OUT JB1-A20=IN JB1-A19=IN JB1-A18=IN

-3	-2	-1	REF DESIGNATOR	ITEM NO.	DESCRIPTION	MAT'L. DWG NO./JBHL NO.
QTY REQD						

INTERPRET IN GENERAL ACCORDANCE WITH ASME Y14.24M-1989

UNLESS OTHERWISE SPECIFIED DIMENSIONS ARE IN INCHES

DECIMAL TOLERANCES
.X ±.030
.XX ±.015
.XXX ±.005
ANGULAR TOLERANCE
± .5°

NA FINISH

BREAK SHARP EDGES
MAX. XX MIN. XX

OUTSTANDING ECN

Q.A. CATEGORY A-3		DATE
DRAWN BY	Ed Koropsak	6/5/98
CHECKED BY		
DESIGN APPROVAL		
ENGINEER APPROVAL	R.MICHNOFF	6/5/98
SUPVR. APPROVAL		
NEXT ASSEMBLY		

BROOKHAVEN NATIONAL LABORATORY
UPTON, N.Y. 11973

RHIC CONTROLS WIRING DIAGRAM

BLDG. 1008B, CFE-8B-PS1

bo7-qf8-ps/b8-dhx-ps

SIZE D | 94028559 | REV. A

DRAWING NUMBER

MATERIAL: ——— SCALE: NA WEIGHT: – SHEET 17

*AUTOCAD

REV.	ZONE	ECN NO.	DATE	BY	CKR	APP.

Controls 8/30/99 11:46 AM 8559_18.dwg

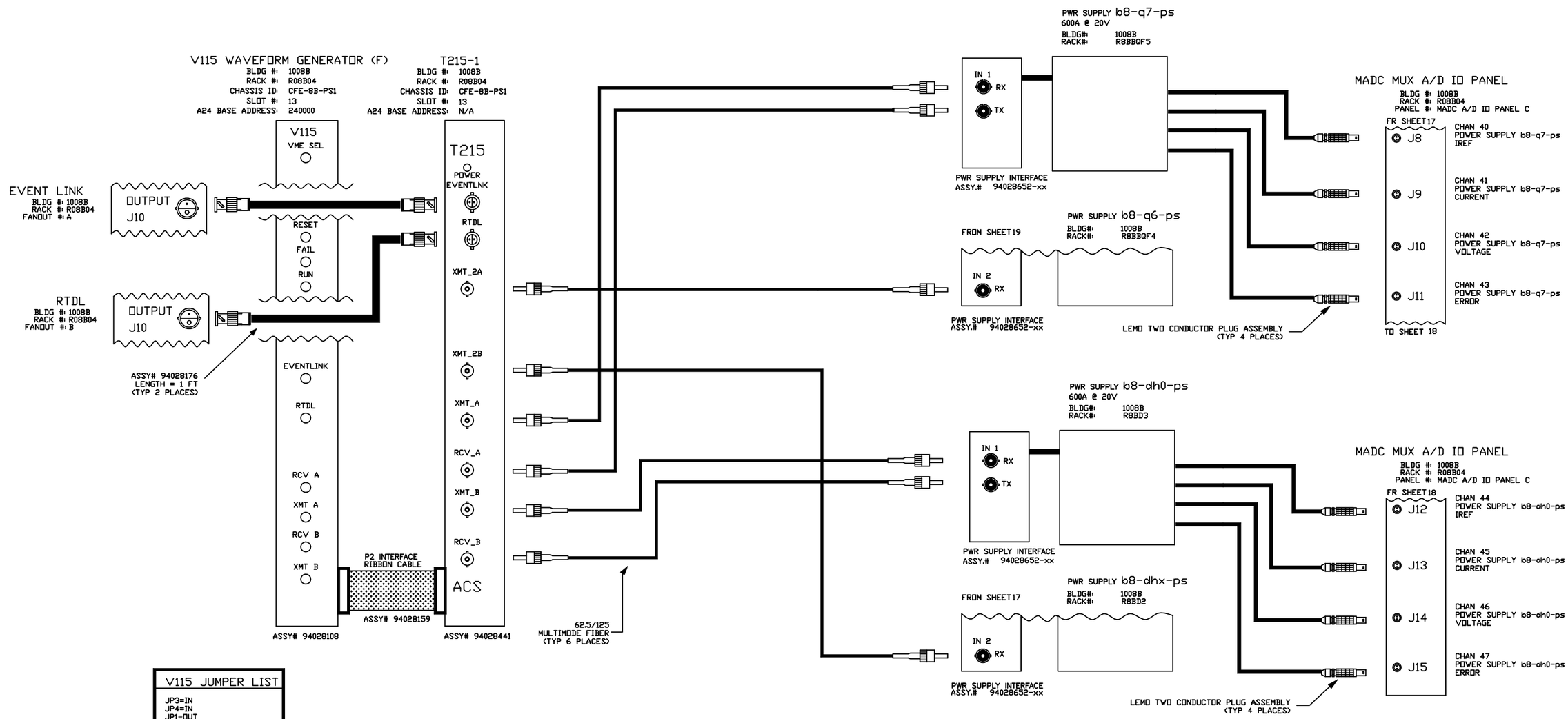

V115 JUMPER LIST

JP3=IN
JP4=IN
JP1=OUT
JP2=OUT

A24 BASE ADDRESS
JB1-A23=IN
JB1-A22=IN
JB1-A21=OUT
JB1-A20=IN
JB1-A19=IN
JB1-A18=OUT

-3	-2	-1	REF DESIGNATOR	ITEM NO.	DESCRIPTION	MAT'L DWG NO./BNL NO.
QTY REQD						

INTERPRET IN GENERAL ACCORDANCE WITH ASME Y14.24M-1989

UNLESS OTHERWISE SPECIFIED DIMENSIONS ARE IN INCHES

DECIMAL TOLERANCES
.X ±.030
.XX ±.015
.XXX ±.005
ANGULAR TOLERANCE ± .5°

NA FINISH

BREAK SHARP EDGES MAX. XX MIN. XX

OUTSTANDING ECN

Q.A. CATEGORY A-3		DATE
DRAWN BY	Ed Koropsak	6/5/98
CHECKED BY		
DESIGN APPROVAL		
ENGINEER APPROVAL	R.MICHNOFF	6/5/98
SUPVR. APPROVAL		

NEXT ASSEMBLY

BROOKHAVEN NATIONAL LABORATORY
UPTON, N.Y. 11973

RHIC CONTROLS WIRING DIAGRAM

BLDG. 1008B, CFE-8B-PS1

b8-q7-ps/b8-dh0-ps

SIZE D | DRAWING NUMBER 94028559 | REV. A

MATERIAL: ——— SCALE: NA WEIGHT: – SHEET 18

*AUTOCAD

REV.	ZONE	ECN NO.	DATE	BY	CKR	APP.

Controls 8/30/99 11:48 AM 8559_19.dwg

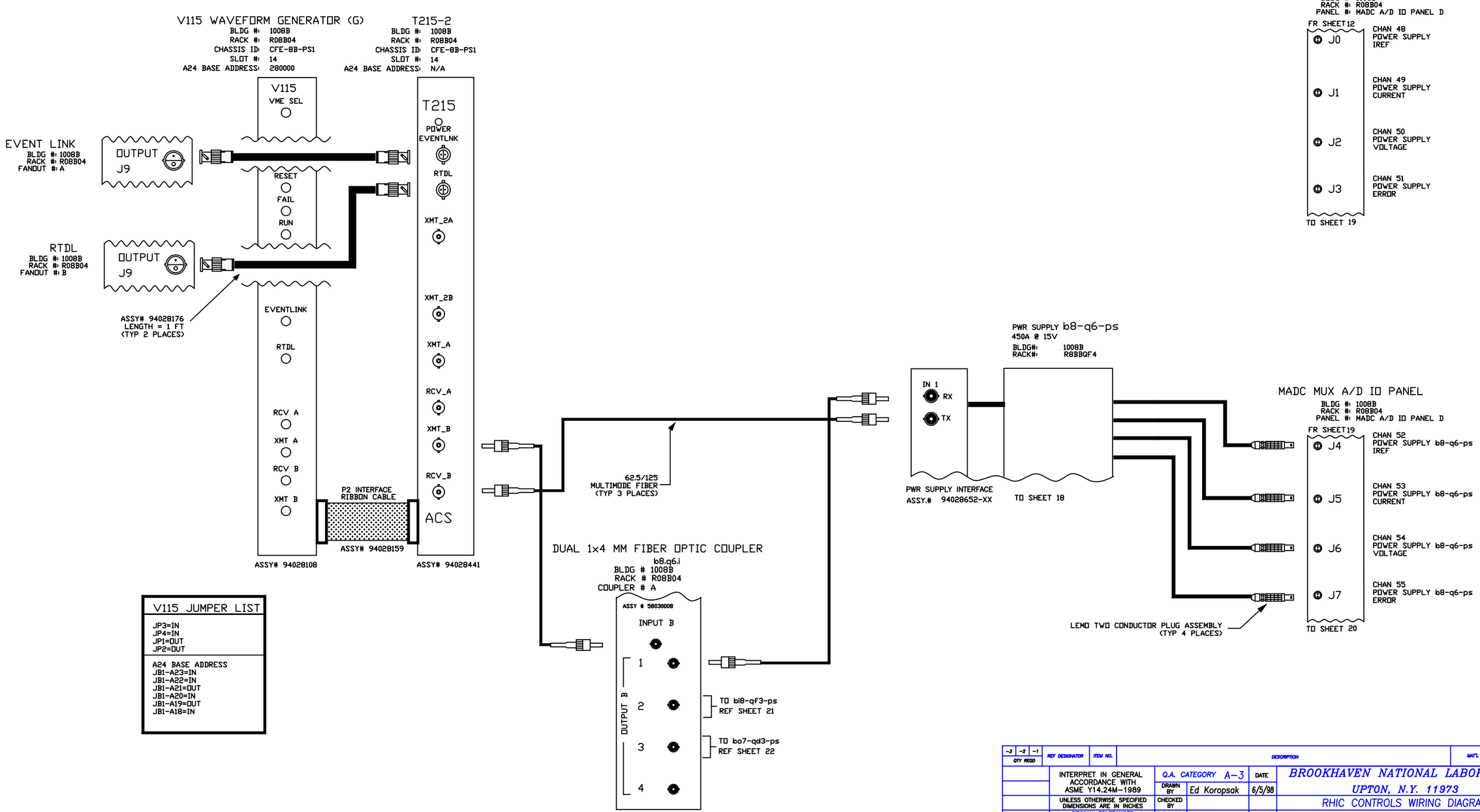

V115 JUMPER LIST
JP3=IN JP4=IN JP1=OUT JP2=OUT
A24 BASE ADDRESS JB1-A23=IN JB1-A22=IN JB1-A21=OUT JB1-A20=IN JB1-A19=OUT JB1-A18=IN

-3	-2	-1	REF DESIGNATOR	ITEM NO.	DESCRIPTION	MAT'L DWG NO./BNL NO.
QTY REQD						

INTERPRET IN GENERAL ACCORDANCE WITH ASME Y14.24M-1989

UNLESS OTHERWISE SPECIFIED DIMENSIONS ARE IN INCHES

DECIMAL TOLERANCES
.X ±.030
.XX ±.015
.XXX ±.005
ANGULAR TOLERANCE ± .5°

NA FINISH — BREAK SHARP EDGES — MAX. XX MIN. XX

OUTSTANDING ECN

Q.A. CATEGORY A-3		DATE
DRAWN BY	Ed Koropsak	6/5/98
CHECKED BY		
DESIGN APPROVAL		
ENGINEER APPROVAL	R.MICHNOFF	6/5/98
SUPVR. APPROVAL		

NEXT ASSEMBLY

BROOKHAVEN NATIONAL LABORATORY
UPTON, N.Y. 11973

RHIC CONTROLS WIRING DIAGRAM
BLDG. 1008B, CFE-8B-PS1
b8-q6-ps

SIZE D — 94028559 — REV. A
DRAWING NUMBER

MATERIAL: ——— SCALE: NA WEIGHT: – SHEET 19

*AUTOCAD

REV.	ZONE	ECN NO.	DATE	BY	CKR	APP.

Controls 8/30/99 11:56 AM 8559_20.dwg

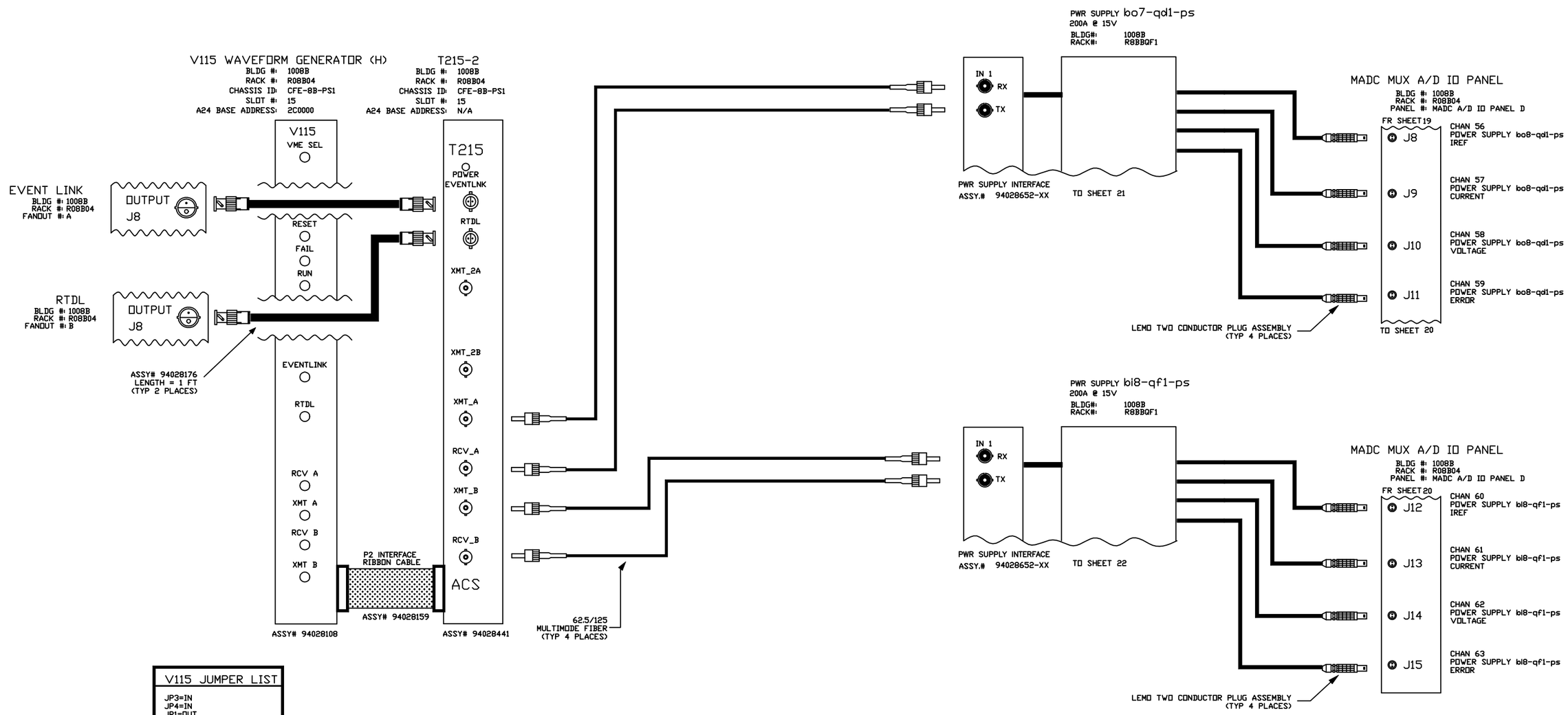

V115 JUMPER LIST
JP3=IN JP4=IN JP1=OUT JP2=OUT
A24 BASE ADDRESS JB1-A23=IN JB1-A22=IN JB1-A21=OUT JB1-A20=IN JB1-A19=OUT JB1-A18=OUT

-3	-2	-1	REF DESIGNATOR	ITEM NO.	DESCRIPTION	MAT'L DWG NO./INL NO.
QTY REQD						

INTERPRET IN GENERAL ACCORDANCE WITH ASME Y14.24M-1989

UNLESS OTHERWISE SPECIFIED DIMENSIONS ARE IN INCHES

DECIMAL TOLERANCES
.X ±.030
.XX ±.015
.XXX ±.005
ANGULAR TOLERANCE
± .5°

NA FINISH

BREAK SHARP EDGES
MAX. XX MIN. XX

OUTSTANDING ECN

Q.A. CATEGORY A-3		DATE
DRAWN BY	Ed Koropsak	6/5/98
CHECKED BY		
DESIGN APPROVAL		
ENGINEER APPROVAL	R.MICHNOFF	6/5/98
SUPVR. APPROVAL		

NEXT ASSEMBLY

BROOKHAVEN NATIONAL LABORATORY
UPTON, N.Y. 11973

RHIC CONTROLS WIRING DIAGRAM

BLDG. 1008B, CFE-8B-PS1

bo8-qd1-ps/bi8-qf1-ps

SIZE D — DRAWING NUMBER 94028559 — REV. A

MATERIAL: ——— SCALE: NA WEIGHT: – SHEET 20

1 *AUTOCAD

REV.	ZONE	ECN NO.	DATE	BY	CKR	APP.

Controls 8/30/99 11:59 AM 8559_21.dwg

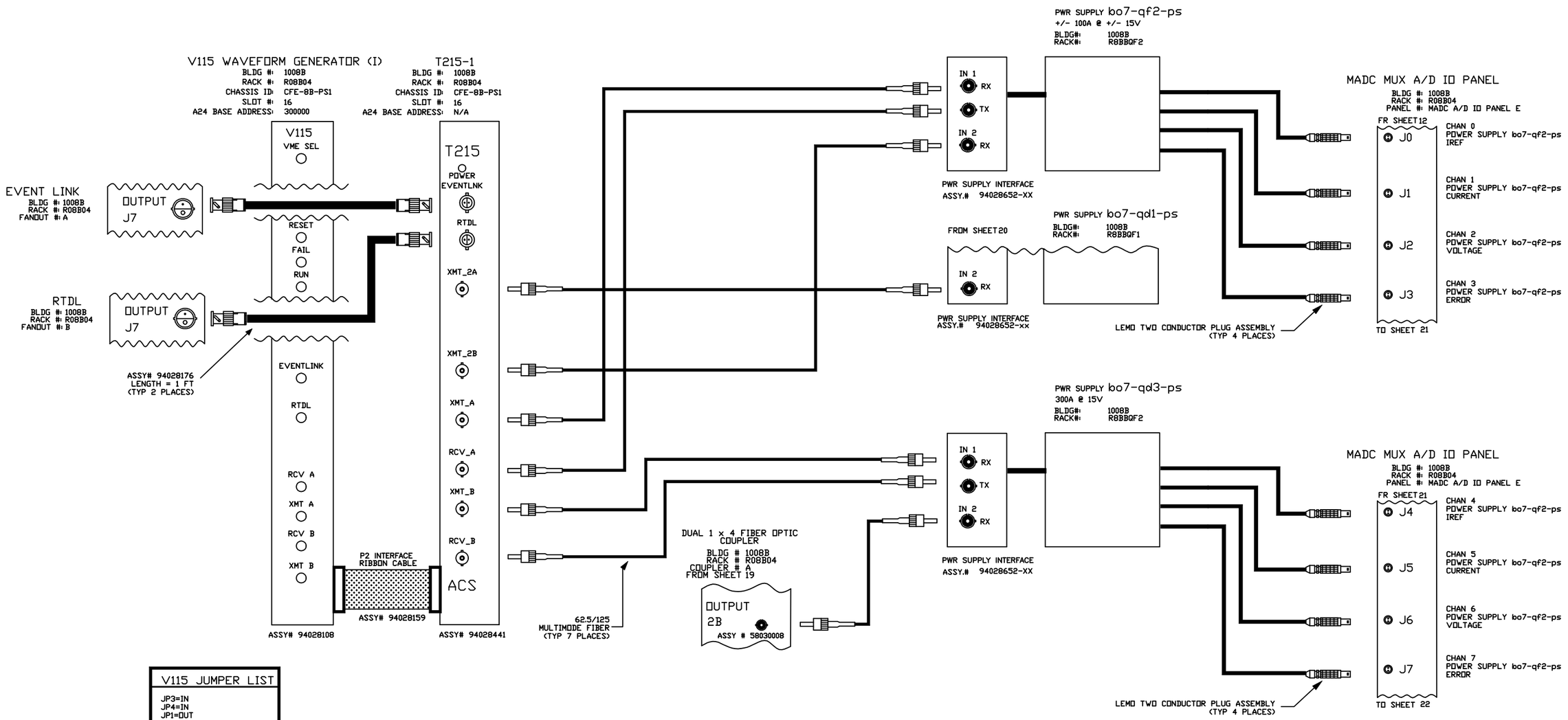

V115 JUMPER LIST
JP3=IN JP4=IN JP1=OUT JP2=OUT
A24 BASE ADDRESS JB1-A23=IN JB1-A22=IN JB1-A21=OUT JB1-A20=OUT JB1-A19=IN JB1-A18=IN

-3	-2	-1	REF DESIGNATOR	ITEM NO.	DESCRIPTION	MAT'L DWG NO./BNL NO.
QTY REQD						

INTERPRET IN GENERAL ACCORDANCE WITH ASME Y14.24M-1989

UNLESS OTHERWISE SPECIFIED DIMENSIONS ARE IN INCHES

DECIMAL TOLERANCES
.X ±.030
.XX ±.015
.XXX ±.005
ANGULAR TOLERANCE
± .5°

OUTSTANDING ECN

NA FINISH

BREAK SHARP EDGES
MAX. XX MIN. XX

Q.A. CATEGORY A-3		DATE
DRAWN BY	Ed Koropsak	6/5/98
CHECKED BY		
DESIGN APPROVAL		
ENGINEER APPROVAL	R.MICHNOFF	6/5/98
SUPVR. APPROVAL		
NEXT ASSEMBLY		

BROOKHAVEN NATIONAL LABORATORY
UPTON, N.Y. 11973

RHIC CONTROLS WIRING DIAGRAM

BLDG. 1008B, CFE-8B-PS1

bo7-qf2-ps/bo7-qd3-ps

SIZE D

DRAWING NUMBER 94028559

REV. A

MATERIAL: ——— SCALE: NA WEIGHT: – SHEET 21

*AUTOCAD

REV.	ZONE	ECN NO.	DATE	BY	CKR	APP.

Controls 8/30/99 1:06 PM 8559_22.dwg

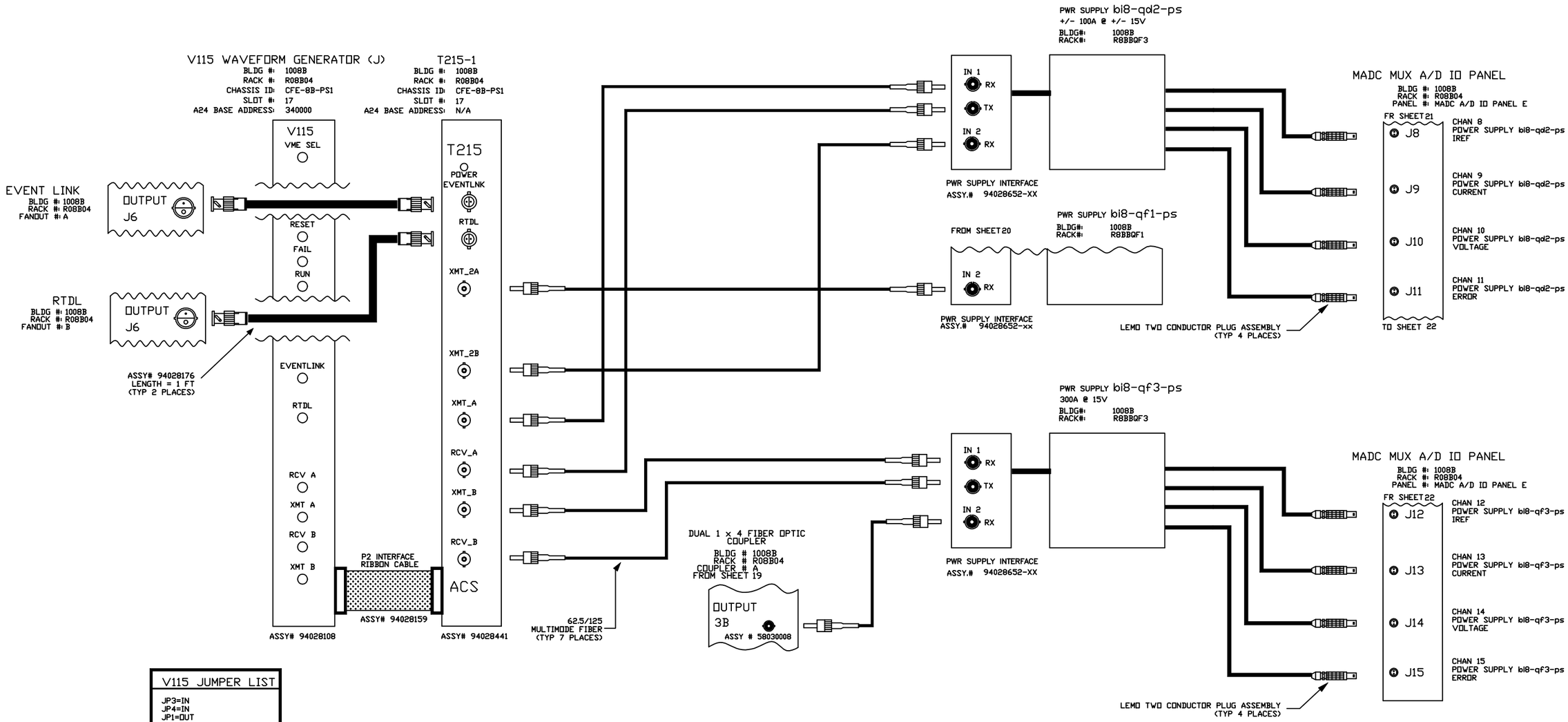

V115 JUMPER LIST
JP3=IN JP4=IN JP1=OUT JP2=OUT
A24 BASE ADDRESS JB1-A23=IN JB1-A22=IN JB1-A21=OUT JB1-A20=OUT JB1-A19=IN JB1-A18=OUT

-3	-2	-1	REF DESIGNATOR	ITEM NO.	DESCRIPTION	MAT'L DWG NO./BNL NO.
QTY REQD						

INTERPRET IN GENERAL ACCORDANCE WITH ASME Y14.24M-1989

UNLESS OTHERWISE SPECIFIED DIMENSIONS ARE IN INCHES

DECIMAL TOLERANCES
.X ±.030
.XX ±.015
.XXX ±.005
ANGULAR TOLERANCE
± .5°

OUTSTANDING ECN

NA FINISH

BREAK SHARP EDGES
MAX. XX MIN. XX

Q.A. CATEGORY A-3		DATE
DRAWN BY	Ed Koropsak	6/5/98
CHECKED BY		
DESIGN APPROVAL		
ENGINEER APPROVAL	R.MICHNOFF	6/5/98
SUPVR. APPROVAL		
NEXT ASSEMBLY		

BROOKHAVEN NATIONAL LABORATORY
UPTON, N.Y. 11973

RHIC CONTROLS WIRING DIAGRAM

BLDG. 1008B, CFE-8B-PS1

bi8-qd2-ps/bi8-qf3-ps

SIZE D | DRAWING NUMBER 94028559 | REV. A

MATERIAL: ——— SCALE: NA WEIGHT: – SHEET 22

*AUTOCAD

REV.	ZONE	ECN NO.	DATE	BY	CKR	APP.

CONTROLS- 3/15/01 3:44 PM 8559_28.dwg

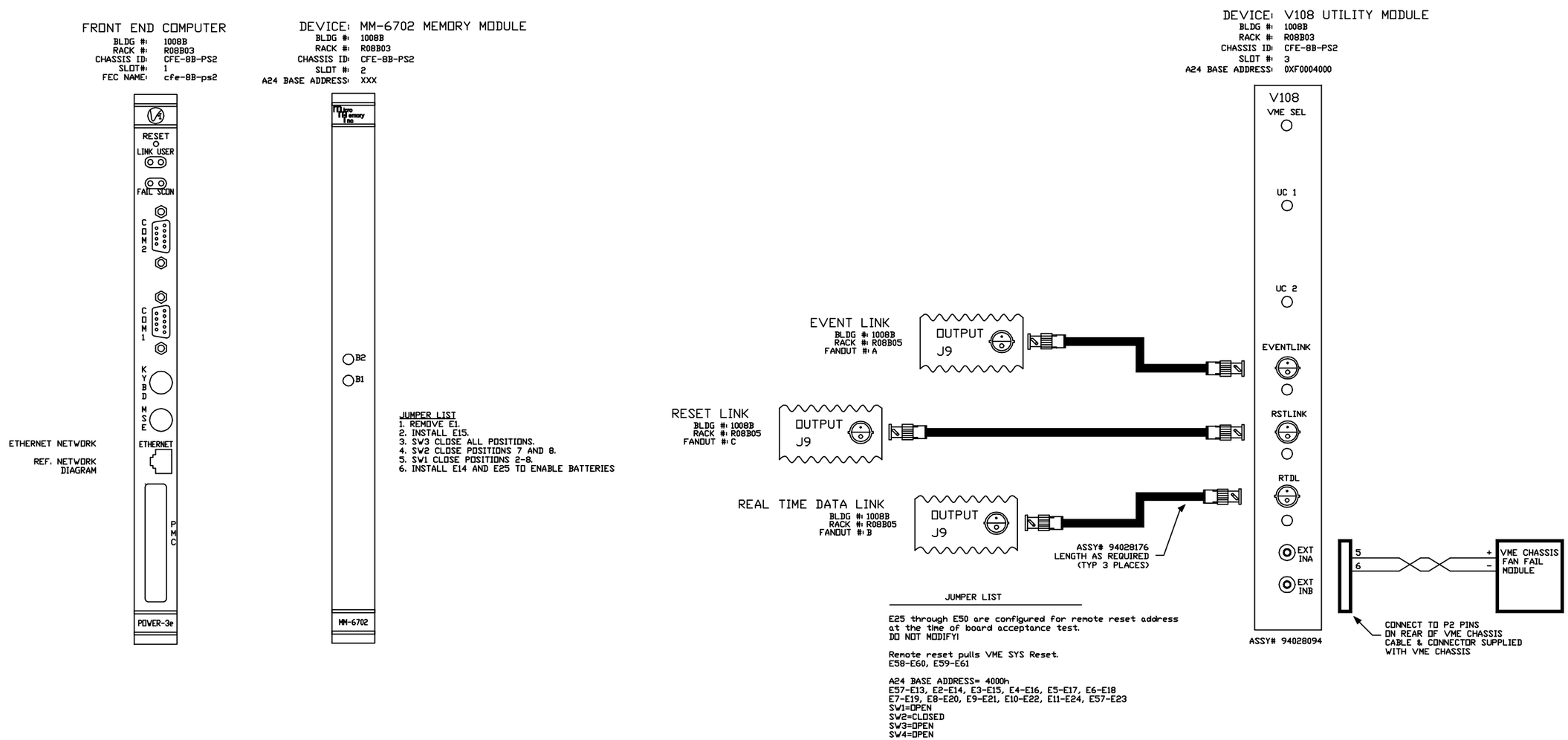

JUMPER LIST

E25 through E50 are configured for remote reset address at the time of board acceptance test.
DO NOT MODIFY!

Remote reset pulls VME SYS Reset.
E58-E60, E59-E61

A24 BASE ADDRESS= 4000h
E57-E13, E2-E14, E3-E15, E4-E16, E5-E17, E6-E18
E7-E19, E8-E20, E9-E21, E10-E22, E11-E24, E57-E23
SW1=OPEN
SW2=CLOSED
SW3=OPEN
SW4=OPEN

-3	-2	-1	REF DESIGNATOR	ITEM NO.	DESCRIPTION	MAT'L DWG NO.,BAL NO.
QTY REQD						

INTERPRET IN GENERAL ACCORDANCE WITH ASME Y14.24M-1989

UNLESS OTHERWISE SPECIFIED DIMENSIONS ARE IN INCHES

DECIMAL TOLERANCES
.X ±.030
.XX ±.015
.XXX ±.005
ANGULAR TOLERANCE
± .5°

NA FINISH

BREAK SHARP EDGES
MAX. XX MIN. XX

OUTSTANDING ECN

Q.A. CATEGORY A-3		DATE
DRAWN BY	Venegas	8/30/99
CHECKED BY		
DESIGN APPROVAL		
ENGINEER APPROVAL	R. MICHNOFF	10/21/97
SUPVR. APPROVAL		

NEXT ASSEMBLY

BROOKHAVEN NATIONAL LABORATORY
UPTON, N.Y. 11973

RHIC CONTROLS WIRING DIAGRAM

SERV BLDG 1008B, VME CHASSIS CFE-8B-PS2

CPU/MEMORY /V108 UTIL MODULE

SIZE D | DRAWING NUMBER 94028559 | REV. A

MATERIAL: ——— | SCALE: NA | WEIGHT: – | SHEET 28

*AUTOCAD

REV.	ZONE	ECN NO.	DATE	BY	CKR	APP.

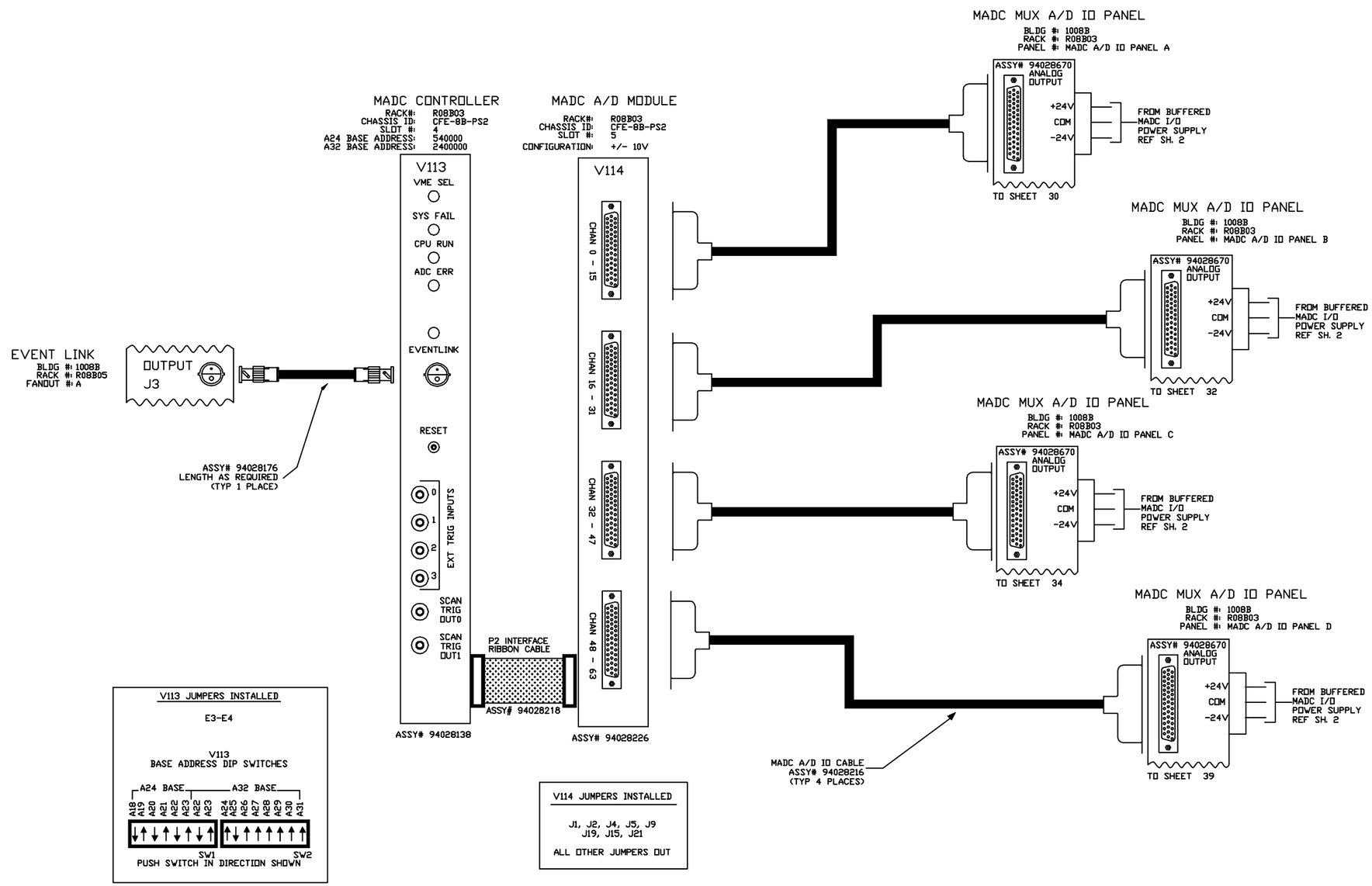

V113 JUMPERS INSTALLED

E3-E4

V113
BASE ADDRESS DIP SWITCHES

PUSH SWITCH IN DIRECTION SHOWN

V114 JUMPERS INSTALLED

J1, J2, J4, J5, J9
J19, J15, J21

ALL OTHER JUMPERS OUT

-3	-2	-1	REF DESIGNATOR	ITEM NO.	DESCRIPTION	MAT'L DWG NO.,BRL NO.
QTY REQD						

INTERPRET IN GENERAL ACCORDANCE WITH ASME Y14.24M-1989

UNLESS OTHERWISE SPECIFIED DIMENSIONS ARE IN INCHES

DECIMAL TOLERANCES
.X ±.030
.XX ±.015
.XXX ±.005
ANGULAR TOLERANCE
± .5°

FINISH: NA

BREAK SHARP EDGES MAX. XX MIN. XX

OUTSTANDING ECN

Q.A. CATEGORY A-3		DATE
DRAWN BY	Ed Koropsak	6/5/98
CHECKED BY		
DESIGN APPROVAL		
ENGINEER APPROVAL	R. MICHNOFF	6/5/98
SUPVR. APPROVAL		

NEXT ASSEMBLY

BROOKHAVEN NATIONAL LABORATORY
UPTON, N.Y. 11973

RHIC CONTROLS WIRING DIAGRAM

1008B, VME CHASSIS CFE-8B-PS2

MADC SYSTEM

SIZE D — DRAWING NUMBER 94028559 — REV. A

MATERIAL: ——— SCALE: NA WEIGHT: – SHEET 29

*AUTOCAD

REV.	ZONE	ECN NO.	DATE	BY	CKR	APP.

Controls 8/30/99 1:19 PM 8559_30.dwg

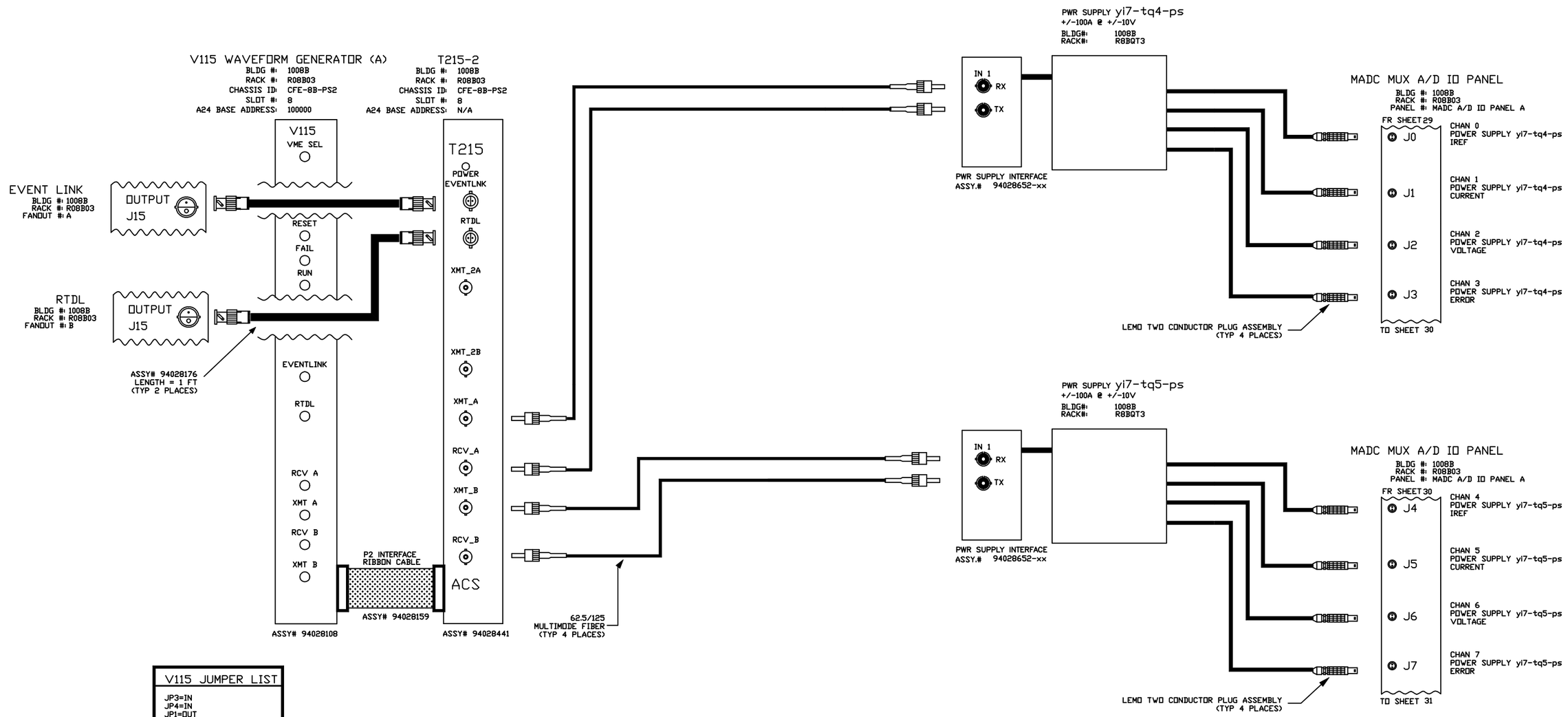

V115 JUMPER LIST
JP3=IN JP4=IN JP1=OUT JP2=OUT
A24 BASE ADDRESS JB1-A23=IN JB1-A22=IN JB1-A21=IN JB1-A20=OUT JB1-A19=IN JB1-A18=IN

-3	-2	-1	REF DESIGNATOR	ITEM NO.	DESCRIPTION	MAT'L DWG NO./BNL NO.
QTY REQD						

INTERPRET IN GENERAL ACCORDANCE WITH ASME Y14.24M-1989

UNLESS OTHERWISE SPECIFIED DIMENSIONS ARE IN INCHES

DECIMAL TOLERANCES
.X ±.030
.XX ±.015
.XXX ±.005
ANGULAR TOLERANCE ± .5°

NA FINISH

BREAK SHARP EDGES MAX. XX MIN. XX

OUTSTANDING ECN

Q.A. CATEGORY A-3

		DATE
DRAWN BY	Ed Koropsak	6/15/98
CHECKED BY		
DESIGN APPROVAL		
ENGINEER APPROVAL	R.MICHNOFF	6/15/98
SUPVR. APPROVAL		

NEXT ASSEMBLY

BROOKHAVEN NATIONAL LABORATORY
UPTON, N.Y. 11973

RHIC CONTROLS WIRING DIAGRAM

BLDG. 1008B, CFE-8B-PS2

yi7-tq4-ps/yi7-tq5-ps

SIZE D | 94028559 | REV. A

DRAWING NUMBER

MATERIAL: ——— SCALE: NA WEIGHT: – SHEET 30

*AUTOCAD

REV.	ZONE	ECN NO.	DATE	BY	CKR	APP.

Controls 8/30/99 1:20 PM 8559_31.dwg

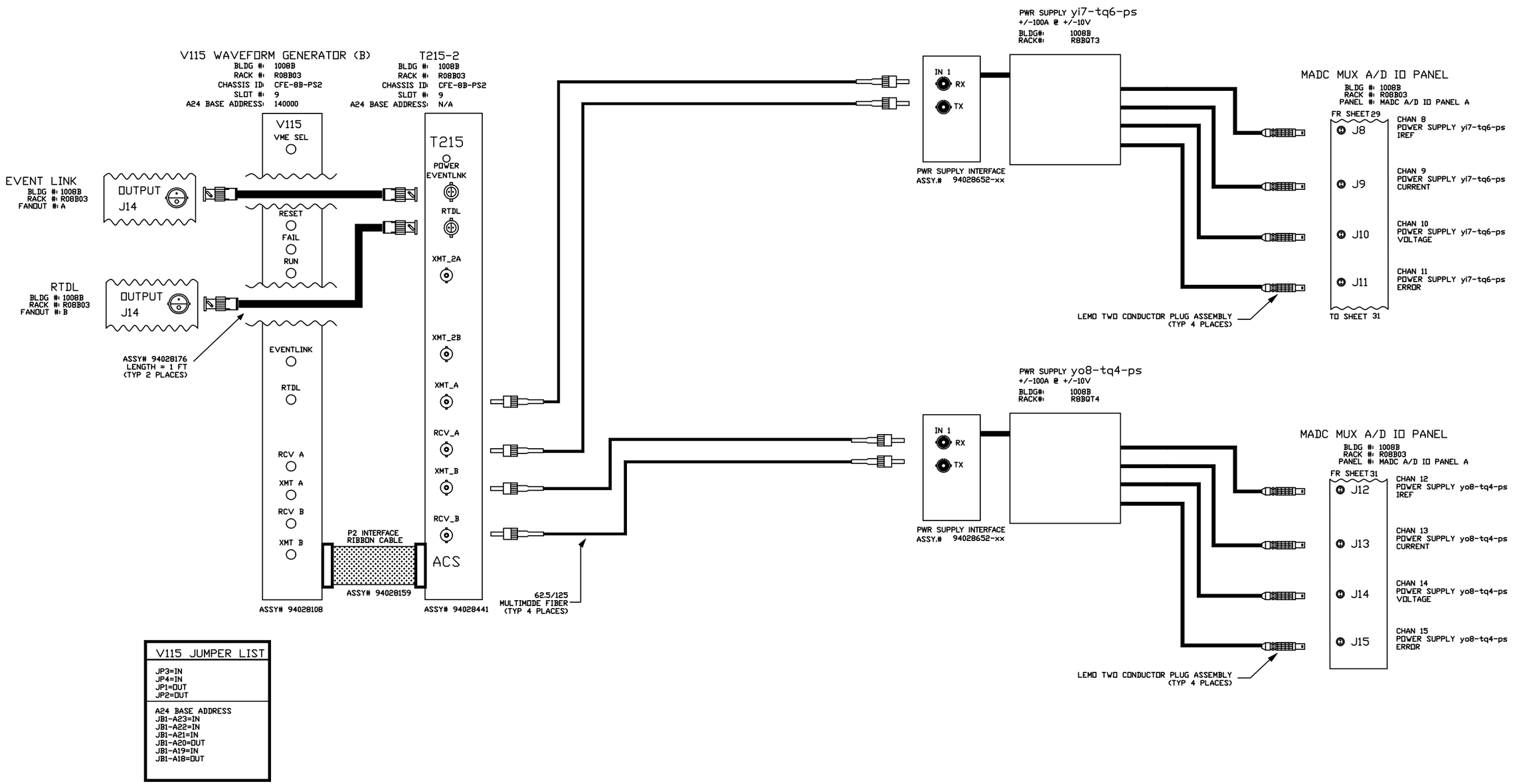

V115 JUMPER LIST
JP3=IN JP4=IN JP1=OUT JP2=OUT
A24 BASE ADDRESS JB1-A23=IN JB1-A22=IN JB1-A21=IN JB1-A20=OUT JB1-A19=IN JB1-A18=OUT

-3	-2	-1	REF DESIGNATOR	ITEM NO.	DESCRIPTION	MAT'L. DWG NO.,SPEC. NO.
QTY REQD						

INTERPRET IN GENERAL ACCORDANCE WITH ASME Y14.24M-1989

UNLESS OTHERWISE SPECIFIED DIMENSIONS ARE IN INCHES

DECIMAL TOLERANCES
.X ±.030
.XX ±.015
.XXX ±.005
ANGULAR TOLERANCE
± .5°

NA FINISH

BREAK SHARP EDGES
MAX. XX MIN. XX

OUTSTANDING ECN

Q.A. CATEGORY A-3		DATE
DRAWN BY	Ed Koropsak	6/15/98
CHECKED BY		
DESIGN APPROVAL		
ENGINEER APPROVAL	R.MICHNOFF	6/15/98
SUPVR. APPROVAL		
NEXT ASSEMBLY		

BROOKHAVEN NATIONAL LABORATORY
UPTON, N.Y. 11973

RHIC CONTROLS WIRING DIAGRAM

BLDG. 1008B, CFE-8B-PS2

yi7-tq6-ps/yo8-tq4-ps

SIZE D — DRAWING NUMBER 94028559 — REV. A

MATERIAL: ——— SCALE: NA WEIGHT: – SHEET 31

*AUTOCAD

REV.	ZONE	ECN NO.	DATE	BY	CKR	APP.

Controls 8/30/99 1:22 PM 8559_32.dwg

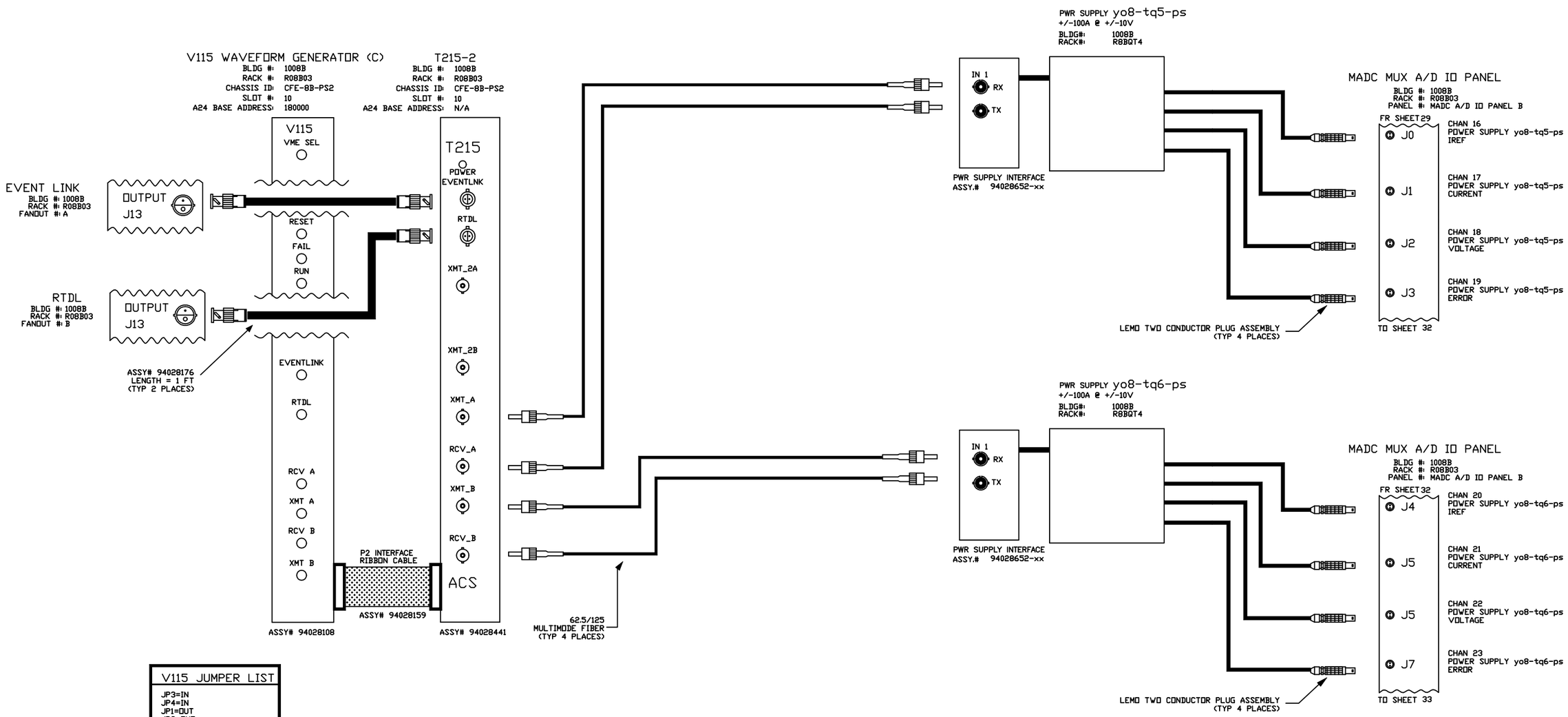

V115 JUMPER LIST
JP3=IN JP4=IN JP1=OUT JP2=OUT
A24 BASE ADDRESS JB1-A23=IN JB1-A22=IN JB1-A21=IN JB1-A20=OUT JB1-A19=OUT JB1-A18=IN

-3	-2	-1	REF DESIGNATOR	ITEM NO.	DESCRIPTION	MAT'L. DWG NO.,SPEC. NO.
QTY REQD						

INTERPRET IN GENERAL ACCORDANCE WITH ASME Y14.24M-1989

UNLESS OTHERWISE SPECIFIED DIMENSIONS ARE IN INCHES

DECIMAL TOLERANCES
.X ±.030
.XX ±.015
.XXX ±.005
ANGULAR TOLERANCE
± .5°

NA FINISH

BREAK SHARP EDGES
MAX. XX MIN. XX

OUTSTANDING ECN

Q.A. CATEGORY A-3		DATE
DRAWN BY	Ed Koropsak	6/15/98
CHECKED BY		
DESIGN APPROVAL		
ENGINEER APPROVAL	R.MICHNOFF	6/15/98
SUPVR. APPROVAL		

NEXT ASSEMBLY

BROOKHAVEN NATIONAL LABORATORY
UPTON, N.Y. 11973

RHIC CONTROLS WIRING DIAGRAM
BLDG. 1008B, CFE-8B-PS2
yo8-tq5-ps/yo8-tq6-ps

SIZE D | DRAWING NUMBER 94028559 | REV. A

MATERIAL: ——— SCALE: NA WEIGHT: – SHEET 32

*AUTOCAD

REV.	ZONE	ECN NO.	DATE	BY	CKR	APP.

Controls 8/30/99 1:25 PM 8559_33.dwg

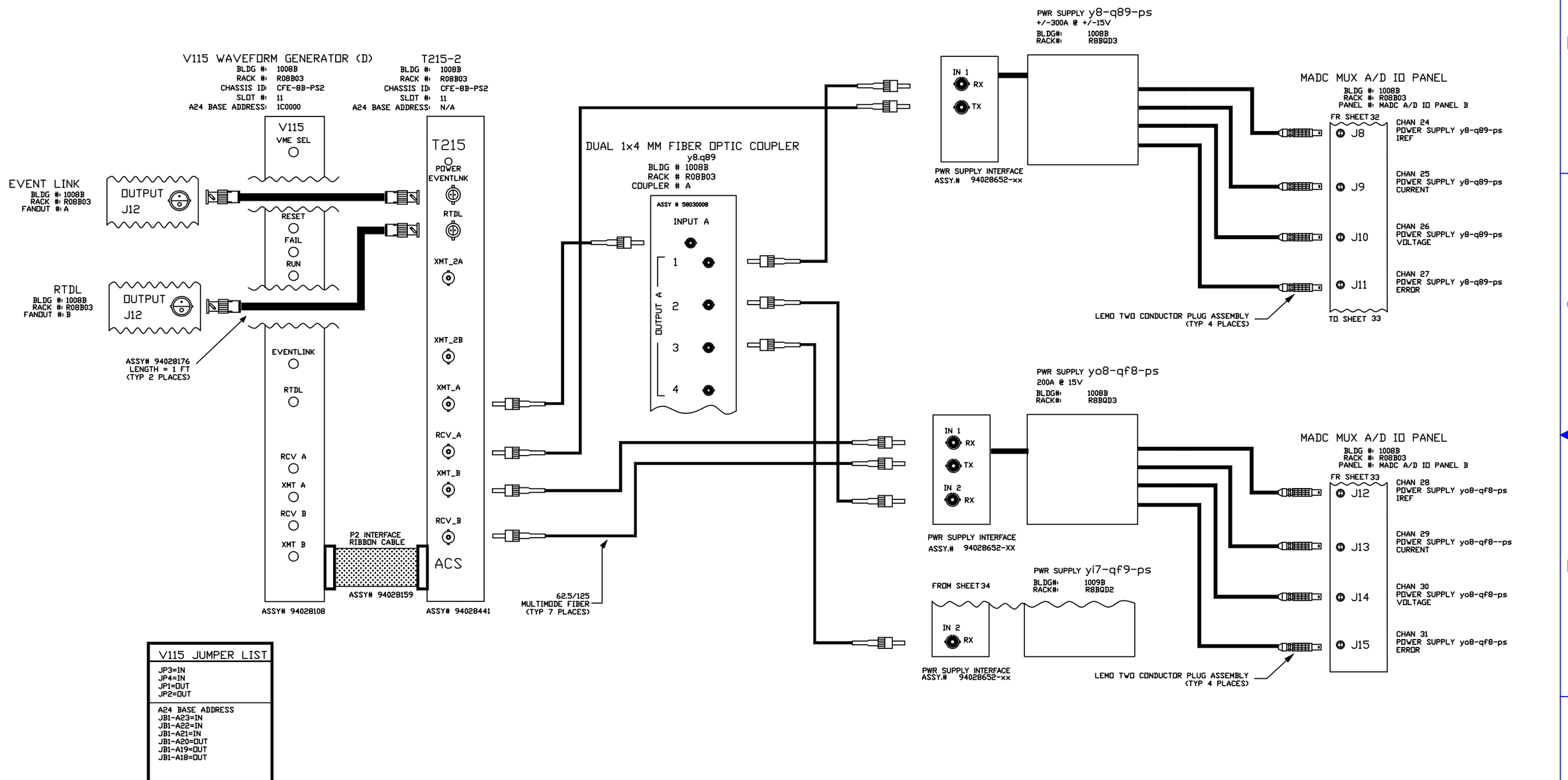

V115 JUMPER LIST
JP3=IN JP4=IN JP1=OUT JP2=OUT
A24 BASE ADDRESS JB1-A23=IN JB1-A22=IN JB1-A21=IN JB1-A20=OUT JB1-A19=OUT JB1-A18=OUT

-3	-2	-1	REF DESIGNATOR	ITEM NO.	DESCRIPTION	MAT'L DWG NO.,BNL NO.
QTY REQD						

INTERPRET IN GENERAL ACCORDANCE WITH ASME Y14.24M-1989

UNLESS OTHERWISE SPECIFIED DIMENSIONS ARE IN INCHES

DECIMAL TOLERANCES
.X ±.030
.XX ±.015
.XXX ±.005
ANGULAR TOLERANCE
± .5°

NA FINISH

BREAK SHARP EDGES
MAX. XX MIN. XX

OUTSTANDING ECN

Q.A. CATEGORY A-3		DATE
DRAWN BY	Ed Koropsak	6/15/98
CHECKED BY		
DESIGN APPROVAL		
ENGINEER APPROVAL	R.MICHNOFF	6/15/98
SUPVR. APPROVAL		

NEXT ASSEMBLY

BROOKHAVEN NATIONAL LABORATORY
UPTON, N.Y. 11973

RHIC CONTROLS WIRING DIAGRAM
BLDG. 1008B, CFE-8B-PS1
y8-q89-ps/yo8-qf8-ps

SIZE D
DRAWING NUMBER 94028559
REV. A

MATERIAL: ——— SCALE: NA WEIGHT: – SHEET 33

*AUTOCAD

REV.	ZONE	ECN NO.	DATE	BY	CKR	APP.

Controls 8/30/99 1:28 PM 8559_34.dwg

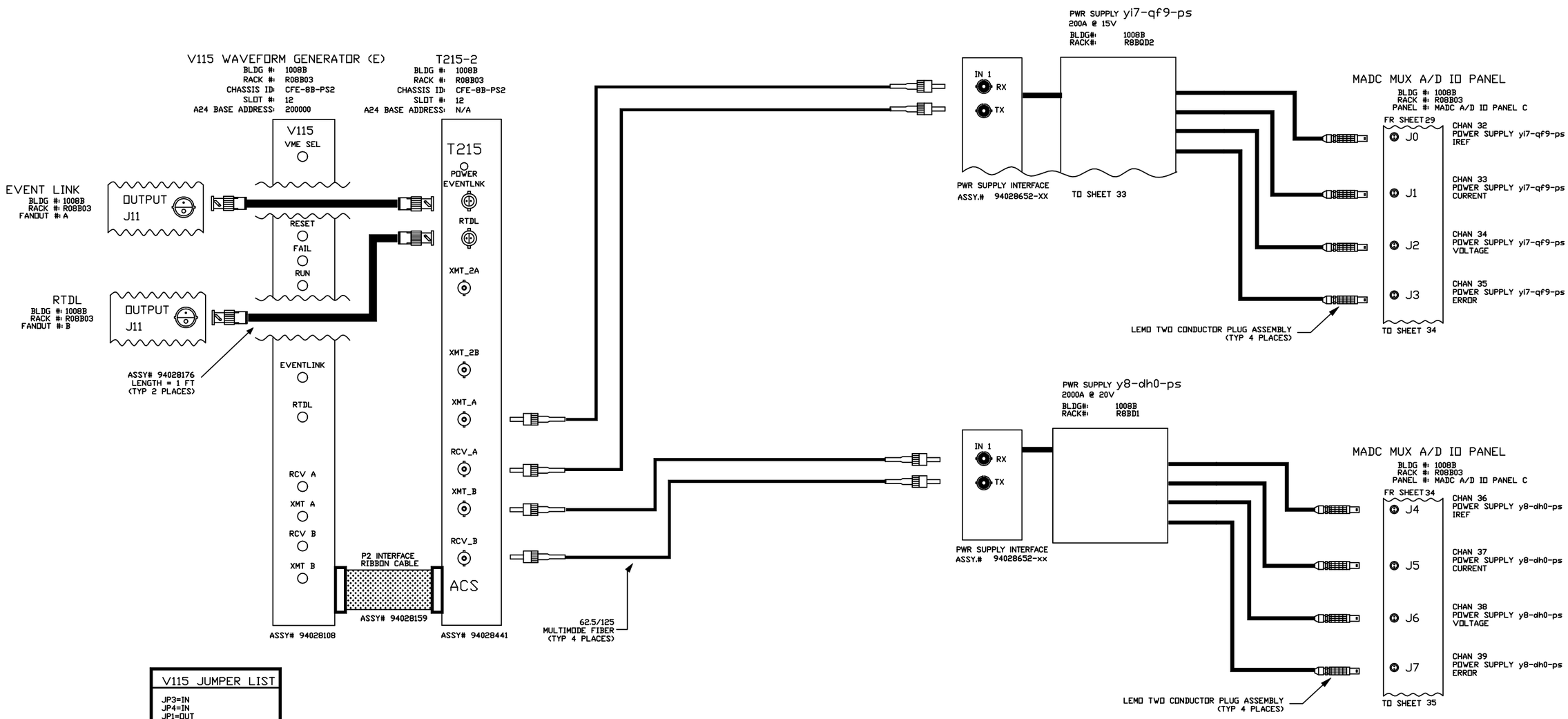

V115 JUMPER LIST
JP3=IN JP4=IN JP1=OUT JP2=OUT
A24 BASE ADDRESS JB1-A23=IN JB1-A22=IN JB1-A21=OUT JB1-A20=IN JB1-A19=IN JB1-A18=IN

-3	-2	-1	REF DESIGNATOR	ITEM NO.	DESCRIPTION	MAT'L. DWG NO./BNL NO.
QTY REQD						

INTERPRET IN GENERAL ACCORDANCE WITH ASME Y14.24M-1989

UNLESS OTHERWISE SPECIFIED DIMENSIONS ARE IN INCHES

DECIMAL TOLERANCES
.X ±.030
.XX ±.015
.XXX ±.005
ANGULAR TOLERANCE
± .5°

NA FINISH — BREAK SHARP EDGES — MAX. XX MIN. XX

OUTSTANDING ECN

Q.A. CATEGORY A-3		DATE
DRAWN BY	Ed Koropsak	6/15/98
CHECKED BY		
DESIGN APPROVAL		
ENGINEER APPROVAL	R.MICHNOFF	6/15/98
SUPVR. APPROVAL		

NEXT ASSEMBLY

BROOKHAVEN NATIONAL LABORATORY
UPTON, N.Y. 11973

RHIC CONTROLS WIRING DIAGRAM

BLDG. 1008B, CFE-8B-PS2

yi7-qf9-ps/y8-dh0-ps

SIZE D — 94028559 — REV. A

DRAWING NUMBER

MATERIAL: ——— SCALE: NA WEIGHT: – SHEET 34

*AUTOCAD

REV.	ZONE	ECN NO.	DATE	BY	CKR	APP.

CONTROLS- 3/15/01 3:47 PM 8559_35.dwg

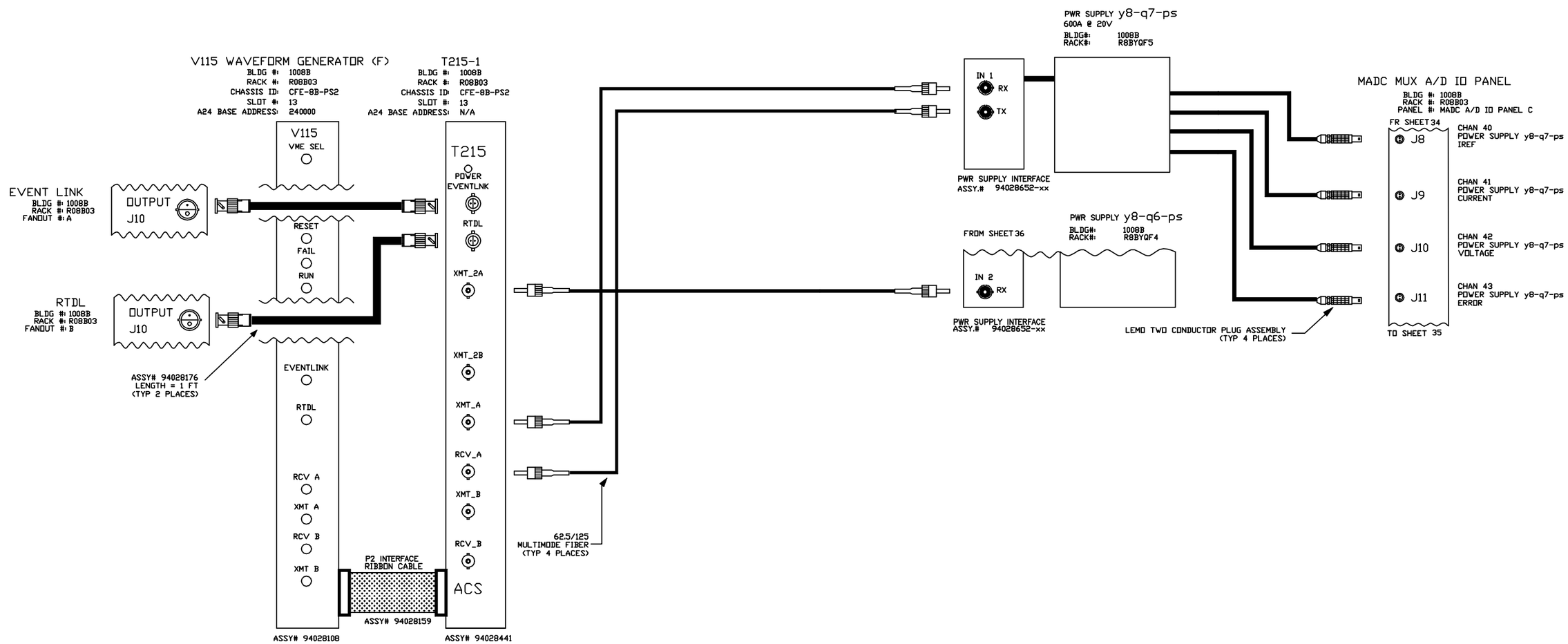

V115 JUMPER LIST
JP3=IN JP4=IN JP1=OUT JP2=OUT
A24 BASE ADDRESS JB1-A23=IN JB1-A22=IN JB1-A21=OUT JB1-A20=IN JB1-A19=IN JB1-A18=OUT

-3	-2	-1	REF DESIGNATOR	ITEM NO.	DESCRIPTION	MAT'L. DWG NO./BNL NO.
QTY REQD						

INTERPRET IN GENERAL ACCORDANCE WITH ASME Y14.24M-1989

UNLESS OTHERWISE SPECIFIED DIMENSIONS ARE IN INCHES

DECIMAL TOLERANCES
.X ±.030
.XX ±.015
.XXX ±.005
ANGULAR TOLERANCE
± .5°

NA FINISH

BREAK SHARP EDGES
MAX. XX MIN. XX

OUTSTANDING ECN

Q.A. CATEGORY A-3		DATE
DRAWN BY	Ed Koropsak	6/15/98
CHECKED BY		
DESIGN APPROVAL		
ENGINEER APPROVAL	R.MICHNOFF	6/15/98
SUPVR. APPROVAL		

NEXT ASSEMBLY

BROOKHAVEN NATIONAL LABORATORY
UPTON, N.Y. 11973

RHIC CONTROLS WIRING DIAGRAM
BLDG. 1008B, CFE-8B-PS2
y8-q7-ps

SIZE D
DRAWING NUMBER 94028559
REV. A

MATERIAL: ——— SCALE: NA WEIGHT: — SHEET 35

*AUTOCAD

REV.	ZONE	ECN NO.	DATE	BY	CKR	APP.

CONTROLS- 3/15/01 3:48 PM 8559_36.dwg

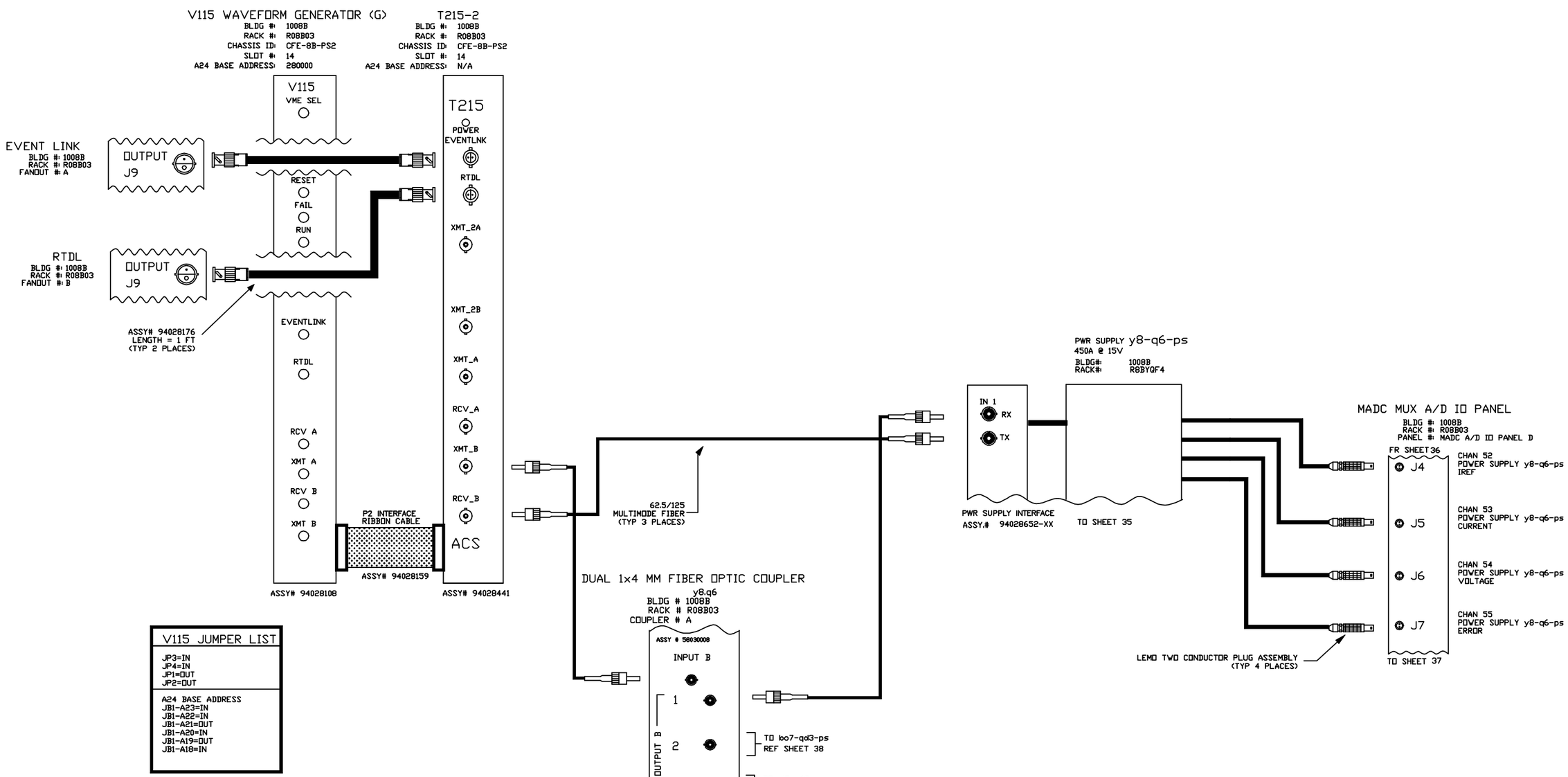

V115 JUMPER LIST
JP3=IN JP4=IN JP1=OUT JP2=OUT
A24 BASE ADDRESS JB1-A23=IN JB1-A22=IN JB1-A21=OUT JB1-A20=IN JB1-A19=OUT JB1-A18=IN

-3	-2	-1	REF DESIGNATOR	ITEM NO.	DESCRIPTION	MAT'L DWG NO./BNL NO.
QTY REQD						

INTERPRET IN GENERAL ACCORDANCE WITH ASME Y14.24M-1989	Q.A. CATEGORY A-3	DATE	BROOKHAVEN NATIONAL LABORATORY UPTON, N.Y. 11973
UNLESS OTHERWISE SPECIFIED DIMENSIONS ARE IN INCHES	DRAWN BY Ed Koropsak	6/15/98	RHIC CONTROLS WIRING DIAGRAM
DECIMAL TOLERANCES .X ±.030 .XX ±.015 .XXX ±.005 ANGULAR TOLERANCE ± .5°	CHECKED BY		BLDG. 1008B, CFE-8B-PS2
	DESIGN APPROVAL		y8-q6-ps
	ENGINEER APPROVAL R.MICHNOFF	6/15/98	
	SUPVR. APPROVAL		SIZE D — 94028559 — REV. A
NA FINISH — BREAK SHARP EDGES MAX. XX MIN. XX	NEXT ASSEMBLY		DRAWING NUMBER
OUTSTANDING ECN			MATERIAL: ——— SCALE: NA WEIGHT: — SHEET 36

*AUTOCAD

REV.	ZONE	ECN NO.	DATE	BY	CKR	APP.

Controls 8/30/99 1:37 PM 8559_37.dwg

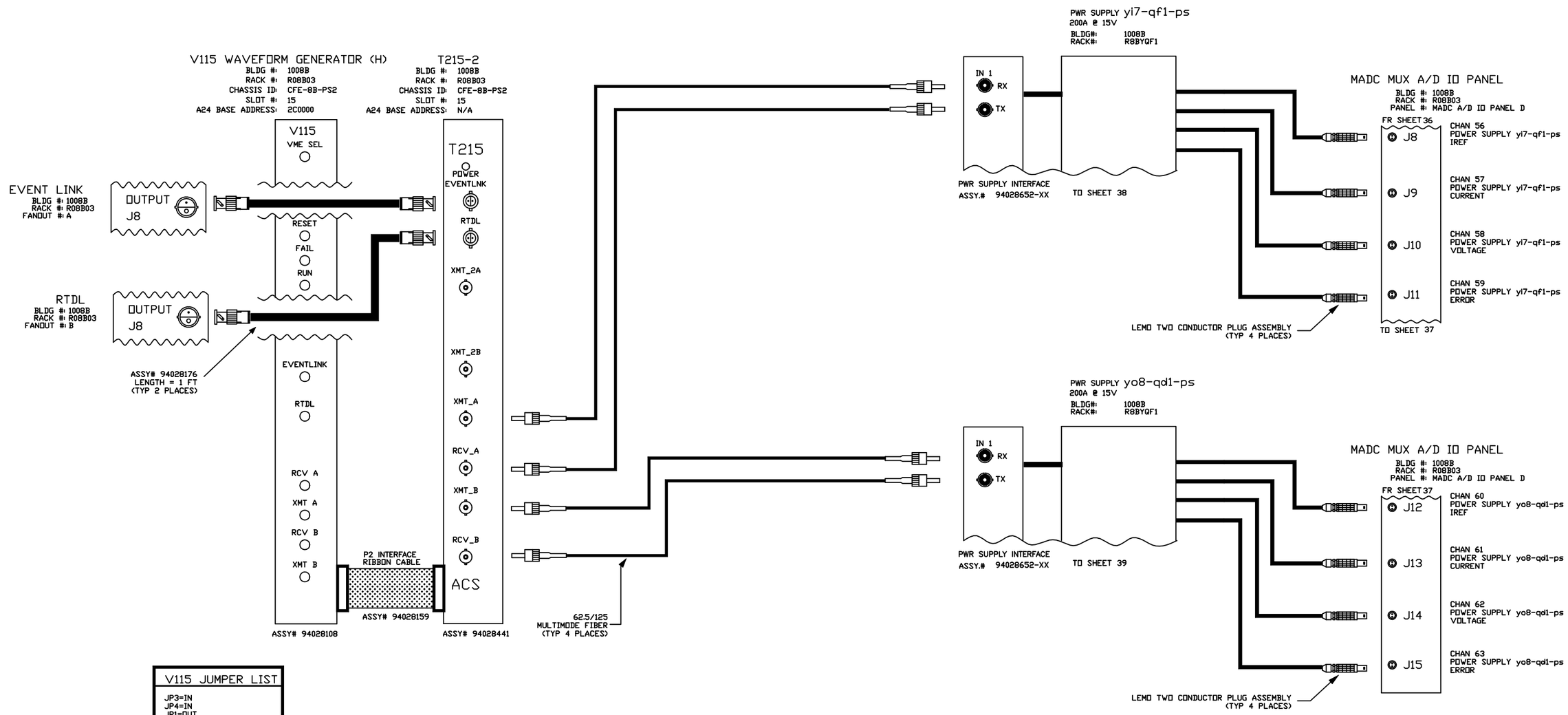

V115 JUMPER LIST

JP3=IN
JP4=IN
JP1=OUT
JP2=OUT

A24 BASE ADDRESS
JB1-A23=IN
JB1-A22=IN
JB1-A21=OUT
JB1-A20=IN
JB1-A19=OUT
JB1-A18=OUT

-3	-2	-1	REF DESIGNATOR	ITEM NO.	DESCRIPTION	MAT'L DWG NO./INL NO.
QTY REQD						

INTERPRET IN GENERAL ACCORDANCE WITH ASME Y14.24M-1989

UNLESS OTHERWISE SPECIFIED DIMENSIONS ARE IN INCHES

DECIMAL TOLERANCES
.X ±.030
.XX ±.015
.XXX ±.005
ANGULAR TOLERANCE
± .5°

NA FINISH

BREAK SHARP EDGES
MAX. XX MIN. XX

OUTSTANDING ECN

Q.A. CATEGORY A-3		DATE
DRAWN BY	Ed Koropsak	6/15/98
CHECKED BY		
DESIGN APPROVAL		
ENGINEER APPROVAL	R.MICHNOFF	6/15/98
SUPVR. APPROVAL		

NEXT ASSEMBLY

BROOKHAVEN NATIONAL LABORATORY
UPTON, N.Y. 11973

RHIC CONTROLS WIRING DIAGRAM
BLDG. 1008B, CFE-8B-PS2
yi7-qf1-ps/yo8-qd1-ps

SIZE D
94028559
DRAWING NUMBER
REV. A

MATERIAL: ——— SCALE: NA WEIGHT: – SHEET 37 OF 52

1 *AUTOCAD

REV.	ZONE	ECN NO.	DATE	BY	CKR	APP.

CONTROLS- 3/15/01 3:52 PM 8559_38.dwg

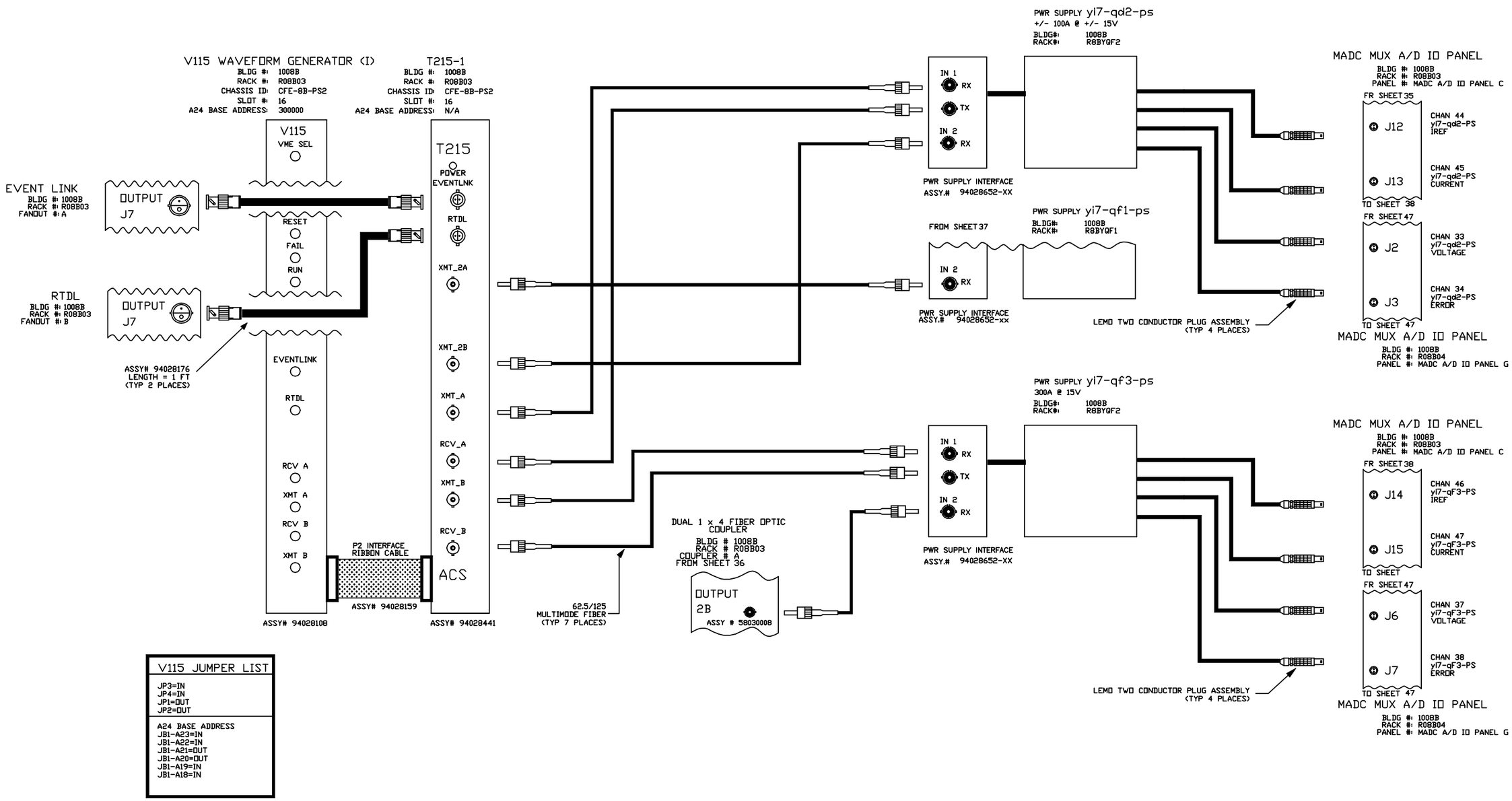

V115 JUMPER LIST
JP3=IN JP4=IN JP1=OUT JP2=OUT
A24 BASE ADDRESS JB1-A23=IN JB1-A22=IN JB1-A21=OUT JB1-A20=OUT JB1-A19=IN JB1-A18=IN

-3	-2	-1	REF DESIGNATOR	ITEM NO.	DESCRIPTION	MAT'L DWG NO./BM. NO.
QTY REQD						

INTERPRET IN GENERAL ACCORDANCE WITH ASME Y14.24M-1989

UNLESS OTHERWISE SPECIFIED DIMENSIONS ARE IN INCHES

DECIMAL TOLERANCES
.X ±.030
.XX ±.015
.XXX ±.005
ANGULAR TOLERANCE
± .5°

NA FINISH

BREAK SHARP EDGES
MAX. XX MIN. XX

OUTSTANDING ECN

Q.A. CATEGORY A-3		DATE
DRAWN BY	Ed Koropsak	6/15/98
CHECKED BY		
DESIGN APPROVAL		
ENGINEER APPROVAL	R.MICHNOFF	6/15/98
SUPVR. APPROVAL		

NEXT ASSEMBLY

BROOKHAVEN NATIONAL LABORATORY
UPTON, N.Y. 11973

RHIC CONTROLS WIRING DIAGRAM

BLDG. 1008B, CFE-8B-PS2

yi7-qd2-ps/yi7-qf3-ps

SIZE D | DRAWING NUMBER 94028559 | REV. A

MATERIAL: ——— SCALE: NA WEIGHT: – SHEET 38

*AUTOCAD

REV.	ZONE	ECN NO.	DATE	BY	CKR	APP.

CONTROLS- 3/15/01 3:57 PM 8559_39.dwg

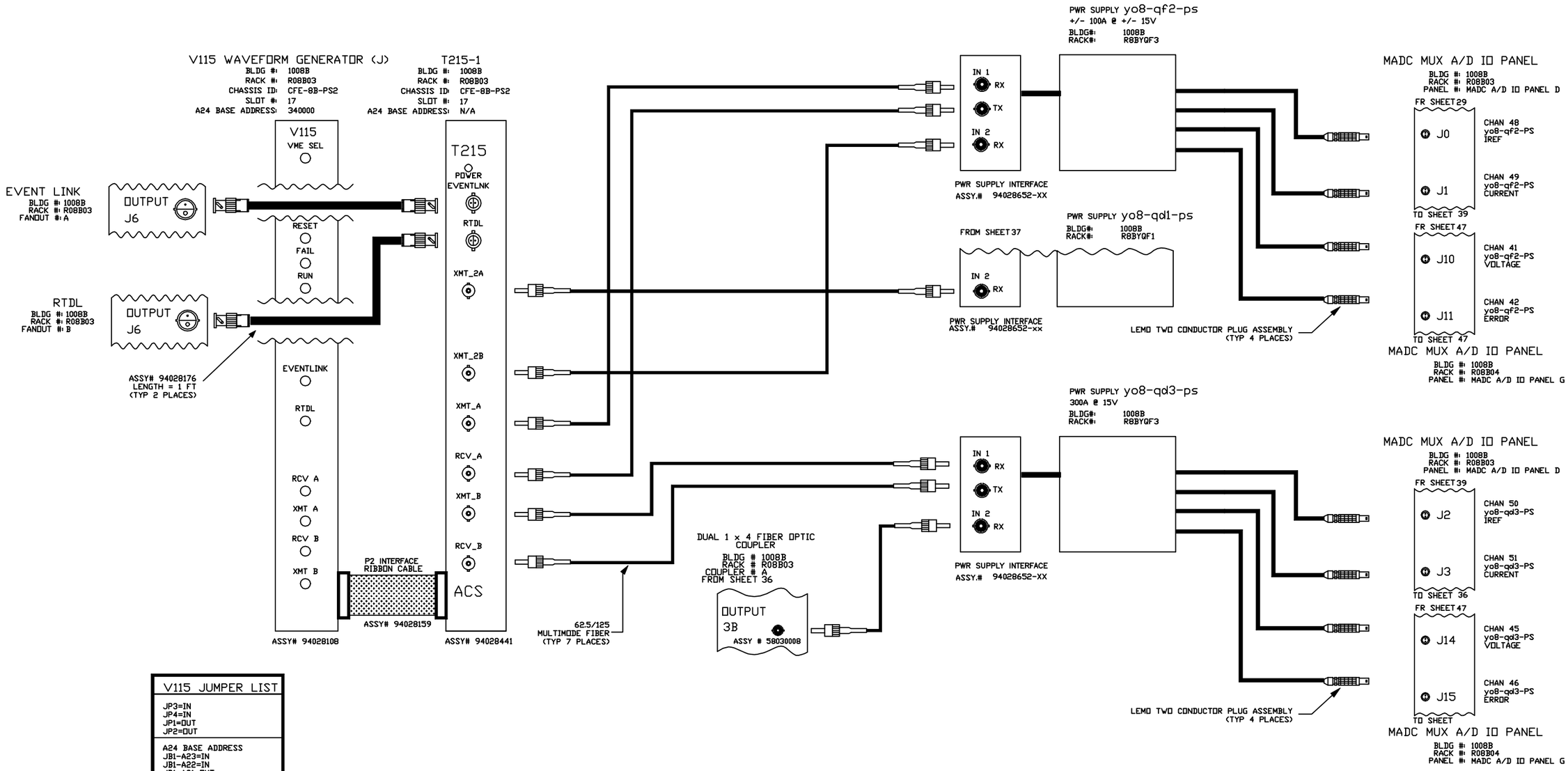

V115 JUMPER LIST
JP3=IN JP4=IN JP1=OUT JP2=OUT
A24 BASE ADDRESS JB1-A23=IN JB1-A22=IN JB1-A21=OUT JB1-A20=OUT JB1-A19=IN JB1-A18=OUT

-3	-2	-1	REF DESIGNATOR	ITEM NO.	DESCRIPTION	MAT'L. DWG NO./BNL NO.
QTY REQD						

INTERPRET IN GENERAL ACCORDANCE WITH ASME Y14.24M-1989	Q.A. CATEGORY A-3	DATE	BROOKHAVEN NATIONAL LABORATORY
	DRAWN BY Ed Koropsak	6/15/98	UPTON, N.Y. 11973
UNLESS OTHERWISE SPECIFIED DIMENSIONS ARE IN INCHES	CHECKED BY		RHIC CONTROLS WIRING DIAGRAM
DECIMAL TOLERANCES .X ±.030 .XX ±.015 .XXX ±.005	DESIGN APPROVAL		BLDG. 1008B, CFE-8B-PS2
ANGULAR TOLERANCE ± .5°	ENGINEER APPROVAL R.MICHNOFF	6/15/98	yo8-qf2-ps/yo8-qd3-ps
	SUPVR. APPROVAL		SIZE D / 94028559 / REV. A
OUTSTANDING ECN	NA FINISH	BREAK SHARP EDGES MAX. XX MIN. XX	NEXT ASSEMBLY / DRAWING NUMBER
			MATERIAL: ——— SCALE: NA WEIGHT: – SHEET 39

*AUTOCAD

REV.	ZONE	ECN NO.	DATE	BY	CKR	APP.

CONTROLS- 1/2/02 1:21 PM 8559_47.dwg

MADC MUX A/D IO PANEL
BLDG #: 1008B
RACK #: R08B04
PANEL #: MADC A/D IO PANEL F

FR SHEET 12

- J0 — CHAN 16 208V-1 IN USE
- J1 — CHAN 17 208V-1 IN USE
- J2 — CHAN 18 POWER SUPPLY 208V-3 IN USE
- J3 — CHAN 19 SPARE

TO SHEET 47

MADC MUX A/D IO PANEL
BLDG #: 1008B
RACK #: R08B04
PANEL #: MADC A/D IO PANEL F

FR SHEET 47

- J8 — CHAN 24 POWER SUPPLY SETPOINT
- J9 — CHAN 25 POWER SUPPLY SETPOINT

TO SHEET 50

MADC MUX A/D IO PANEL
BLDG #: 1008B
RACK #: R08B04
PANEL #: MADC A/D IO PANEL G

FR SHEET 12

- J0 — CHAN 31 POWER SUPPLY SETPOINT
- J1 — CHAN 32 POWER SUPPLY SETPOINT

TO SHEET 38

MADC MUX A/D IO PANEL
BLDG #: 1008B
RACK #: R08B04
PANEL #: MADC A/D IO PANEL G

FR SHEET 38

- J4 — CHAN 35 POWER SUPPLY SETPOINT
- J5 — CHAN 36 POWER SUPPLY SETPOINT

TO SHEET 39

MADC MUX A/D IO PANEL
BLDG #: 1008B
RACK #: R08B04
PANEL #: MADC A/D IO PANEL F

FR SHEET 47

- J4 — CHAN 20 POWER SUPPLY IREF
- J5 — CHAN 21 POWER SUPPLY CURRENT
- J6 — CHAN 22 POWER SUPPLY VOLTAGE
- J7 — CHAN 23 POWER SUPPLY ERROR

TO SHEET 47

MADC MUX A/D IO PANEL
BLDG #: 1008B
RACK #: R08B04
PANEL #: MADC A/D IO PANEL G

FR SHEET 39

- J8 — CHAN 39 POWER SUPPLY SETPOINT
- J9 — CHAN 40 POWER SUPPLY SETPOINT

TO SHEET 39

MADC MUX A/D IO PANEL
BLDG #: 1008B
RACK #: R08B04
PANEL #: MADC A/D IO PANEL G

FR SHEET 39

- J12 — CHAN 43 POWER SUPPLY SETPOINT
- J13 — CHAN 44 POWER SUPPLY SETPOINT

TO SHEET 39

MADC MUX A/D IO PANEL
BLDG #: 1008B
RACK #: R08B04
PANEL #: MADC A/D IO PANEL H

FR SHEET 50

- J12 — CHAN 60 POWER SUPPLY SPARE
- J13 — CHAN 61 POWER SUPPLY SPARE

TO SHEET 11

-3	-2	-1	REF DESIGNATOR	ITEM NO.	DESCRIPTION	MAT'L DWG NO./BNL NO.
QTY REQD						

INTERPRET IN GENERAL ACCORDANCE WITH ASME Y14.24M-1989

UNLESS OTHERWISE SPECIFIED DIMENSIONS ARE IN INCHES

DECIMAL TOLERANCES
.X ±.030
.XX ±.015
.XXX ±.005
ANGULAR TOLERANCE
± .5°

NA FINISH — BREAK SHARP EDGES MAX. XX MIN. XX

OUTSTANDING ECN

Q.A. CATEGORY A-3		DATE
DRAWN BY	Ed Koropsak	6/15/98
CHECKED BY		
DESIGN APPROVAL		
ENGINEER APPROVAL	R.MICHNOFF	6/15/98
SUPVR. APPROVAL		

NEXT ASSEMBLY

BROOKHAVEN NATIONAL LABORATORY
UPTON, N.Y. 11973

RHIC CONTROLS WIRING DIAGRAM

BLDG. 1008B

SPARE MADC CHANNELS

SIZE D — DRAWING NUMBER 94028559 — REV. A

MATERIAL: ——— SCALE: NA WEIGHT: – SHEET 47 OF 52

1 *AUTOCAD

REV.	ZONE	ECN NO.	DATE	BY	CKR	APP.

MULTIMODE FIBER OPTIC TRANSMITTER

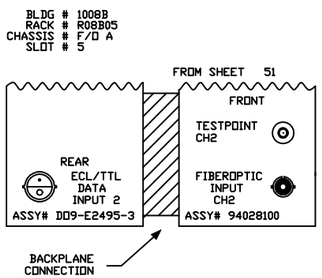

FIBER OPTIC RECEIVER

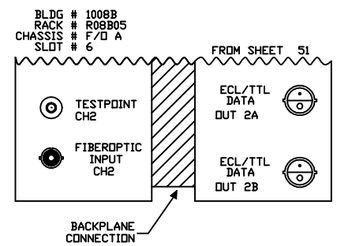

FIBER OPTIC RECEIVER

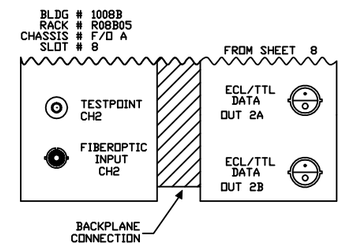

-3	-2	-1	REF DESIGNATOR	ITEM NO.	DESCRIPTION	MAT'L. DWG NO.,SPEC. NO.
QTY REQD						

INTERPRET IN GENERAL ACCORDANCE WITH ASME Y14.24M-1989

UNLESS OTHERWISE SPECIFIED DIMENSIONS ARE IN INCHES

DECIMAL TOLERANCES
.X ±.030
.XX ±.015
.XXX ±.005
ANGULAR TOLERANCE
± .5°

NA FINISH — BREAK SHARP EDGES MAX. XX MIN. XX

OUTSTANDING ECN

Q.A. CATEGORY A-3		DATE	BROOKHAVEN NATIONAL LABORATORY
DRAWN BY	Ed Koropsak	6/15/98	UPTON, N.Y. 11973
CHECKED BY			RHIC CONTROLS WIRING DIAGRAM
DESIGN APPROVAL			SERVICE BLDG. 1008B
ENGINEER APPROVAL	R. MICHNOFF	6/15/98	SPARE F/O RCVR/XMIT CHANNELS
SUPVR. APPROVAL			SIZE D — 94028559 — REV. A
NEXT ASSEMBLY			DRAWING NUMBER

MATERIAL: ——— SCALE: NA WEIGHT: – SHEET 48 OF 52

*AUTOCAD

REV.	ZONE	ECN NO.	DATE	BY	CKR	APP.

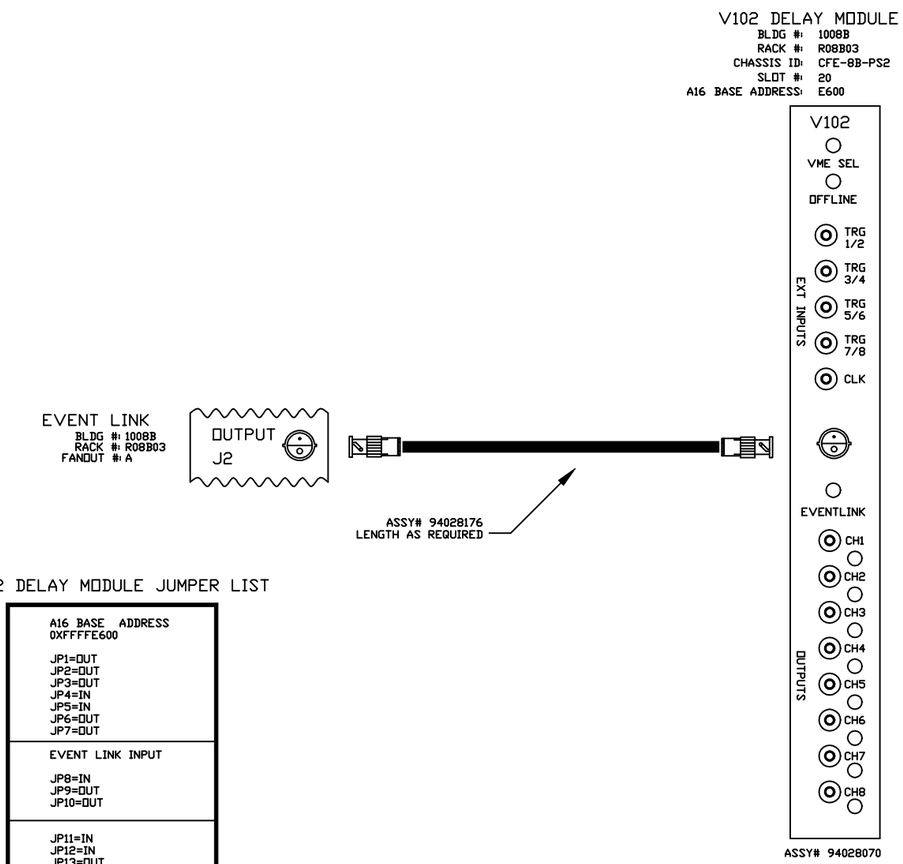

V102 DELAY MODULE JUMPER LIST

A16 BASE ADDRESS 0XFFFFE600 JP1=OUT JP2=OUT JP3=OUT JP4=IN JP5=IN JP6=OUT JP7=OUT
EVENT LINK INPUT JP8=IN JP9=OUT JP10=OUT
JP11=IN JP12=IN JP13=OUT JP14=IN

-3	-2	-1	REF DESIGNATOR	ITEM NO.	DESCRIPTION	MAT'L DWG NO.,SPEC. NO.
QTY REQD						

INTERPRET IN GENERAL ACCORDANCE WITH ASME Y14.24M-1989	Q.A. CATEGORY A-3	DATE	BROOKHAVEN NATIONAL LABORATORY
	DRAWN BY Ed Koropsak	6/15/98	UPTON, N.Y. 11973
UNLESS OTHERWISE SPECIFIED DIMENSIONS ARE IN INCHES	CHECKED BY		RHIC CONTROLS WIRING DIAGRAM
DECIMAL TOLERANCES .X ±.030 .XX ±.015 .XXX ±.005 ANGULAR TOLERANCE ± .5°	DESIGN APPROVAL		BLDG. 1008B CHASSIS CFE-8B-PS2
	ENGINEER APPROVAL R. MICHNOFF	6/15/98	V102 DELAY MODULE
	SUPVR. APPROVAL		SIZE D — 94028559 — REV. A
NA FINISH — BREAK SHARP EDGES MAX. XX MIN. XX	NEXT ASSEMBLY		DRAWING NUMBER
OUTSTANDING ECN			MATERIAL: ——— SCALE: NA WEIGHT: – SHEET 49 OF 52

*AUTOCAD

REV.	ZONE	ECN NO.	DATE	BY	CKR	APP.

CONTROLS- 5/9/01 10:50 AM 8559_50.dwg

DX Heater PS MADC Readbacks

MADC MUX A/D IO PANEL

BLDG #: 1008B
RACK #: R08B04
PANEL #: MADC A/D IO PANEL H

FR SHEET 12

- J0 — CHAN 48, POWER SUPPLY 1008B-7-1-A2, VOLTAGE, g7-dxh-hta
- J1 — CHAN 49, POWER SUPPLY 1008B-7-1-A2, CURRENT, g7-dxh-hta
- J2 — CHAN 50, POWER SUPPLY 1008B-7-1-A2, GND CURRENT, g7-dxh-hta

TO SHEET 50

MADC MUX A/D IO PANEL

BLDG #: 1008B
RACK #: R08B04
PANEL #: MADC A/D IO PANEL H

FR SHEET 50

- J6 — CHAN 54, POWER SUPPLY 1008B-8-1-A1, VOLTAGE, g8-dxh-hta
- J7 — CHAN 55, POWER SUPPLY 1008B-8-1-A1, CURRENT, g8-dxh-hta
- J8 — CHAN 56, POWER SUPPLY 1008B-8-1-A1, GND CURRENT, g8-dxh-hta

TO SHEET 50

MADC MUX A/D IO PANEL

BLDG #: 1008B
RACK #: R08B04
PANEL #: MADC A/D IO PANEL H

FR SHEET 50

- J3 — CHAN 51, POWER SUPPLY 1008B-7-2-B2, VOLTAGE, g7-dxh-htb
- J4 — CHAN 52, POWER SUPPLY 1008B-7-2-B2, CURRENT, g7-dxh-htb
- J5 — CHAN 53, POWER SUPPLY 1008B-7-2-B2, GND CURRENT, g7-dxh-htb

TO SHEET 50

MADC MUX A/D IO PANEL

BLDG #: 1008B
RACK #: R08B04
PANEL #: MADC A/D IO PANEL H

FR SHEET 50

- J9 — CHAN 57, POWER SUPPLY 1008B-8-2-B1, VOLTAGE, g8-dxh-htb
- J10 — CHAN 58, POWER SUPPLY 1008B-8-2-B1, CURRENT, g8-dxh-htb
- J11 — CHAN 59, POWER SUPPLY 1008B-8-2-B1, GND CURRENT, g8-dxh-htb

TO SHEET 47

BLDG #: 1008B RACK #: R08B04 PANEL MADC A/D IO PANEL F

FROM SH 47

- J10 — CHAN 26, PHENIX MMS V
- J11 — CHAN 27, PHENIX MMS I
- J12 — CHAN 28, PHENIX CMO V
- J13 — CHAN 29, PHENIX CMO I
- J14 — CHAN 30, PHENIX MMN V
- J15 — CHAN 31, PHENIX MMN I

-3	-2	-1	REF DESIGNATOR	ITEM NO.	DESCRIPTION	MAT'L DWG NO./BNL NO.
QTY REQD						

INTERPRET IN GENERAL ACCORDANCE WITH ASME Y14.24M-1989

UNLESS OTHERWISE SPECIFIED DIMENSIONS ARE IN INCHES

DECIMAL TOLERANCES
.X ±.030
.XX ±.015
.XXX ±.005
ANGULAR TOLERANCE ± .5°

OUTSTANDING ECN

NA FINISH

BREAK SHARP EDGES MAX. XX MIN. XX

Q.A. CATEGORY A-3		DATE
DRAWN BY	Ed Koropsak	6/15/98
CHECKED BY		
DESIGN APPROVAL		
ENGINEER APPROVAL	R. MICHNOFF	6/15/98
SUPVR. APPROVAL		

NEXT ASSEMBLY

BROOKHAVEN NATIONAL LABORATORY
UPTON, N.Y. 11973

RHIC CONTROLS WIRING DIAGRAM

DX HEATER PS MADC READBACKS

PHENIX MADC READBACKS

SIZE D — DRAWING NUMBER 94028559 — REV. A

MATERIAL: ——— SCALE: NA WEIGHT: – SHEET 50

*AUTOCAD

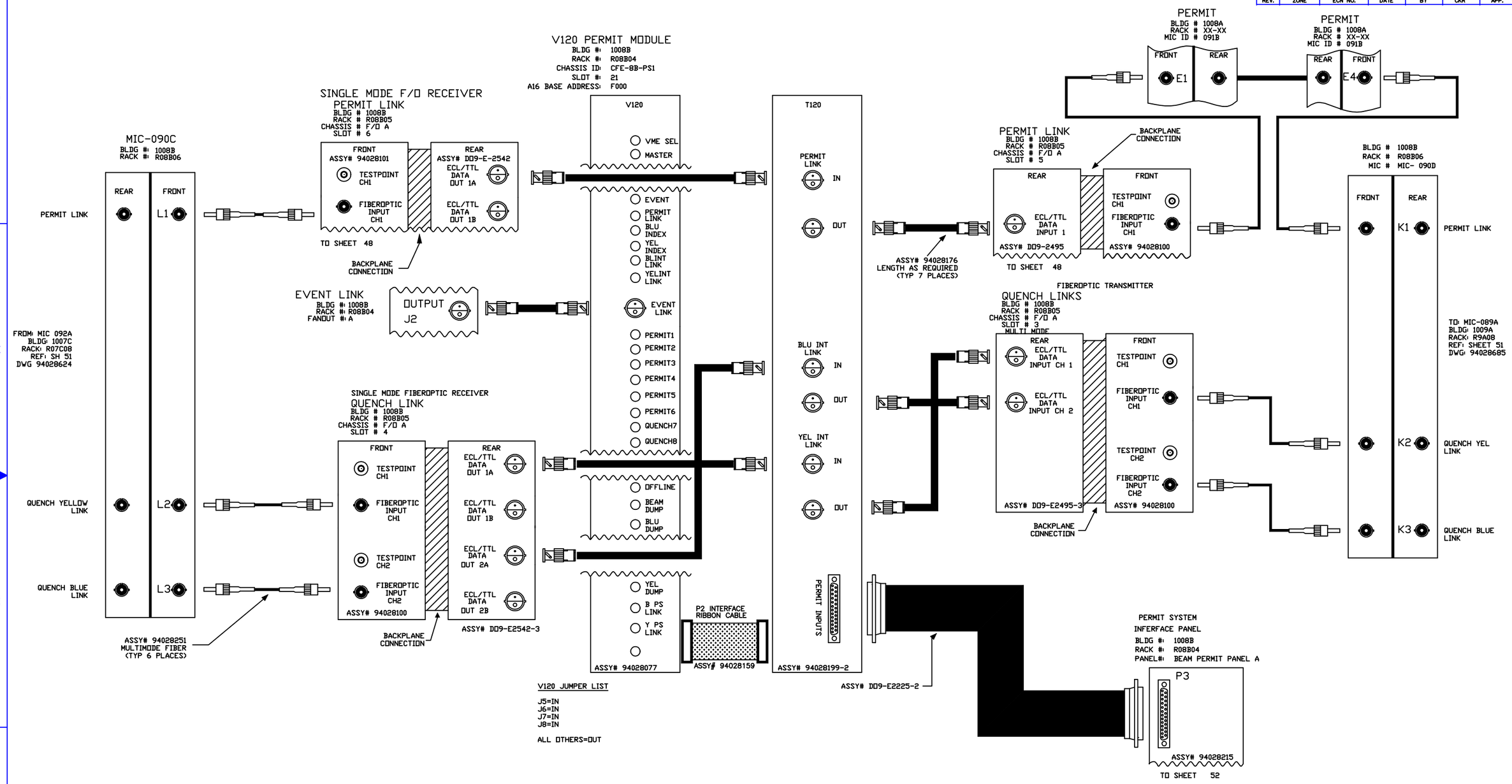

Controls 8/30/99 3:25 PM 8559_51.dwg

-3	-2	-1	REF DESIGNATOR	ITEM NO.	DESCRIPTION	MAT'L. DWG NO./INL NO.
QTY REQD						

INTERPRET IN GENERAL ACCORDANCE WITH ASME Y14.24M-1989

UNLESS OTHERWISE SPECIFIED DIMENSIONS ARE IN INCHES

DECIMAL TOLERANCES
X ±.030
.XX ±.015
.XXX ±.005
ANGULAR TOLERANCE
± .5°

NA FINISH — BREAK SHARP EDGES — MAX. XX MIN. XX

OUTSTANDING ECN

Q.A. CATEGORY A-3		DATE
DRAWN BY	Ed Koropsak	6/15/98
CHECKED BY		
DESIGN APPROVAL		
ENGINEER APPROVAL	R. MICHNOFF	6/15/98
SUPVR. APPROVAL		
NEXT ASSEMBLY		

BROOKHAVEN NATIONAL LABORATORY
UPTON, N.Y. 11973

RHIC CONTROLS WIRING DIAGRAM

SERVIVE BLDG. 1008B, CHASSIS CFE-8B-PS2

V120/T120 PERMIT SYSTEM

SIZE D — DRAWING NUMBER 94028559 — REV. A

MATERIAL: ——— SCALE: NA WEIGHT: — SHEET 51

1 *AUTOCAD

REV.	ZONE	ECN NO.	DATE	BY	CKR	APP.

CONTROLS- 1/2/02 1:31 PM 8559_52.dwg

PERMIT SYSTEM INTERFACE MODULE

BLDG #: 1008B
RACK #: R02B04
PANEL #: PERMIT I/F PANEL A

FROM SHEET 51

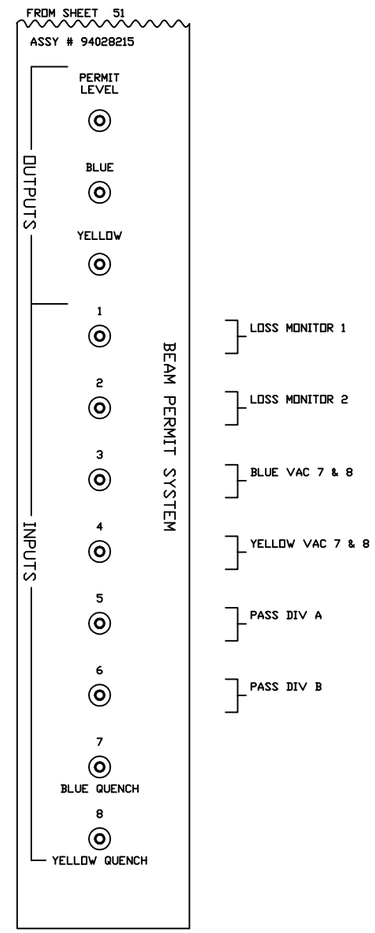

-3	-2	-1	REF DESIGNATOR	ITEM NO.	DESCRIPTION	MAT'L DWG NO.,BHL NO.
QTY REQD						

INTERPRET IN GENERAL ACCORDANCE WITH ASME Y14.24M-1989

UNLESS OTHERWISE SPECIFIED DIMENSIONS ARE IN INCHES

DECIMAL TOLERANCES
.X ±.030
.XX ±.015
.XXX ±.005
ANGULAR TOLERANCE
± .5°

NA FINISH

BREAK SHARP EDGES
MAX. XX MIN. XX

OUTSTANDING ECN

Q.A. CATEGORY A-3		DATE
DRAWN BY	Ed Koropsak	6/15/98
CHECKED BY		
DESIGN APPROVAL		
ENGINEER APPROVAL	R. MICHNOFF	6/15/98
SUPVR. APPROVAL		

NEXT ASSEMBLY

BROOKHAVEN NATIONAL LABORATORY
UPTON, N.Y. 11973

RHIC CONTROLS WIRING DIAGRAM
BLDG. 1008B, RACK R08B04

PERMIT SYSTEM INTERFACE PANEL

SIZE D | DRAWING NUMBER 94028559 | REV. A

MATERIAL: ——— SCALE: NA WEIGHT: – SHEET 52 OF 52

*AUTOCAD

REV.	ZONE	ECN NO.	DATE	BY	CKR	APP.

RESET FANOUT MODULE
BLDG # 1008B
RACK # R08B17
FANOUT # C

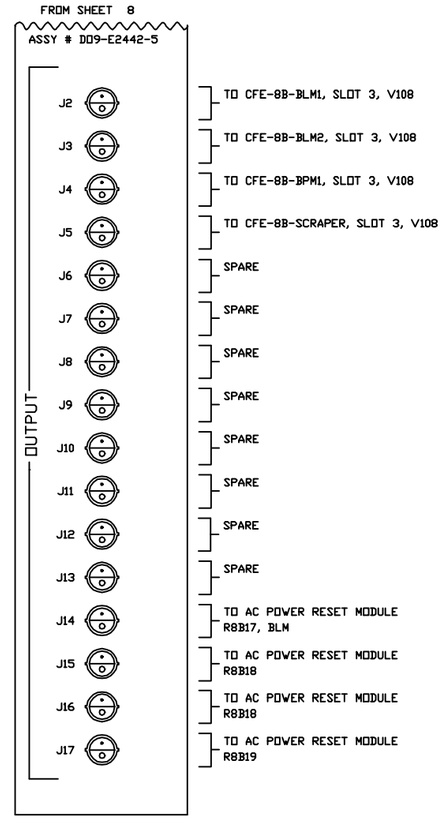

-3	-2	-1	REF DESIGNATOR	ITEM NO.	DESCRIPTION	MAT'L. DWG NO.,BINL NO.
QTY REQD						

INTERPRET IN GENERAL ACCORDANCE WITH ASME Y14.24M-1989

UNLESS OTHERWISE SPECIFIED DIMENSIONS ARE IN INCHES

DECIMAL TOLERANCES
.X ±.030
.XX ±.015
.XXX ±.005
ANGULAR TOLERANCE ± .5°

NA FINISH

BREAK SHARP EDGES MAX. XX MIN. XX

OUTSTANDING ECN

Q.A. CATEGORY A-3		DATE
DRAWN BY	Venegas	8/30/99
CHECKED BY		
DESIGN APPROVAL		
ENGINEER APPROVAL	R. MICHNOFF	6/5/98
SUPVR. APPROVAL		

NEXT ASSEMBLY

BROOKHAVEN NATIONAL LABORATORY
UPTON, N.Y. 11973

RHIC CONTROLS WIRING DIAGRAM
1008B
RESET LINK

SIZE D | DRAWING NUMBER 94028559 | REV. A

MATERIAL: ——— SCALE: NA WEIGHT: – SHEET 53

*AUTOCAD