REV	ZONE	DESCRIPTION	BY	DATE	CKR	APP
B	B7/B5	ECN # 0608	EDK	8/13/92	P.S.	P.S.
C	B8/D7	ECN # 0697	EDK	1/21/93	P.S.	P.S.
D	BC-1-8	ECN # 0771	EDK	2/26/93	P.S.	P.S.
E	BC3,PG2	ECN # 1155	PS	26oct95	P.S.	P.S.

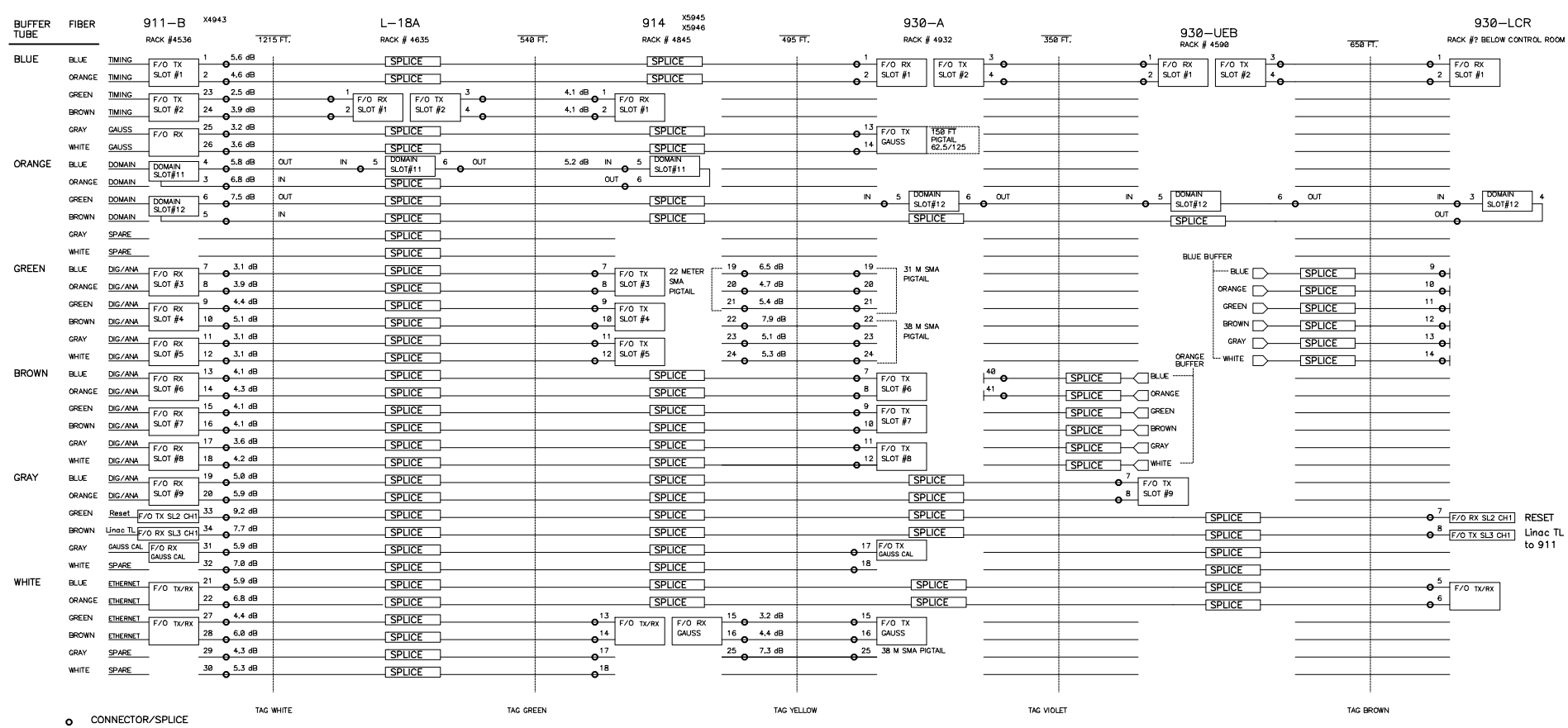

CONNECTOR/SPLICE

F/O — F/O TX OR RX CARD D36-E108 D36-E111

SPLICE — FUSION SPLICE

DOMAIN — OPTELECOM MODEM

CONNECTORS

TIMING SYSTEM--ST
DIG/ANA--------ST
ETHERNET-------ST
DOMAIN---------SMA
GAUSS CELL-----SMA

NOTE---GAUSS CELL IS SPECIAL EQUIPTMENT
J.GELLER IS THE ENGINEER
ETHERNET IS SPECIAL EQUIPTMENT
J. GOULD IS THE ENGINEER

NOTE: THIS SYMBOL INDICATES FIBER CONNECTION FROM PAGE 2. FIBER ON PAGE 2 IS 24 FIBER LOOSE TUBE ARMORED CABLE. FIBER SIZE IS 62.5/125

INTERBUILDING CABLE IS A 36 FIBER LOOSE TUBE ARMORED CABLE.
4 METER LONG TIGHT BUFFERED CONNECTORIZED PIGTAILS ARE SPLICED AT THE RACKS.
ALL CABLES ARE 50/125 FIBER EXCEPT THE PIGTAIL IN 930-A.

FILE NAME: BOOSFOC.SCH

REF DESIGNATOR	ITEM NO	QTY	DESCRIPTION	MATL.DWG NO JINL.NO

XXX ± FRAC ± ANG ± MAX MIN.
TOLERANCE BREAK SHARP EDGES

BROOKHAVEN NATIONAL LABORATORY
ASSOCIATED UNIVERSITIES,INC.
UPTON,N.Y.11973

JOB NUMBER	NEXT ASSEMBLY	NO PER ASS'Y
5/26/92		A3
DATE	MATERIAL	SCALE	Q.A.

BOOSTER FIBER INTERCONNECT
BOOSTER TIMELINE
SHEET 1 OF 2

DRAWN BY	CHECKED BY	ENG.APP	SUPV'R APP	DRAWING NUMBER	REV
ED K	P. STEIN	P.S.	BRO	D36-E1125 -4	E