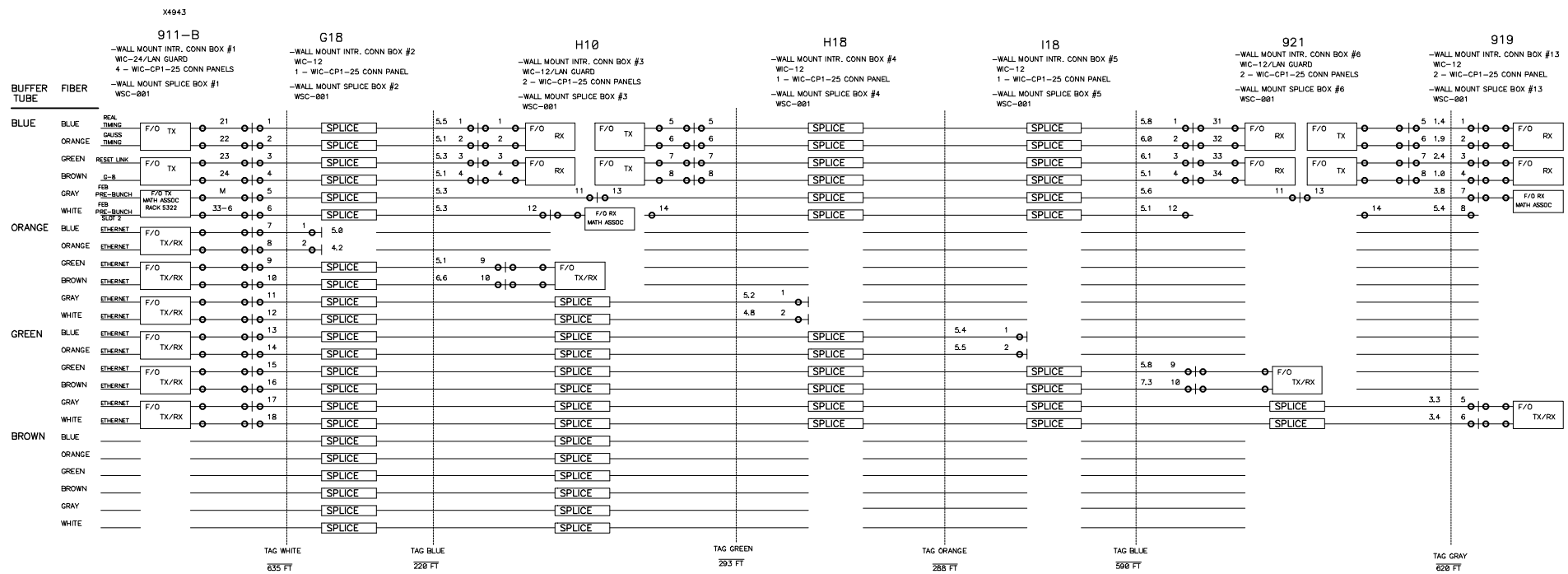

| PATCH PANEL CONNECTION, WALL MOUNTED WIC BOX
WIC BOX CONTAINS WIC-CPI-25 CONNECTOR PANELS
EACH CONNECTOR PANEL CONTAINS 6 ST/ST CONN.

o CONNECTOR/SPLICE

F/O — F/O TX OR RX CARD
94028164 (TX)
94028097 (RX)

SPLICE — FUSION SPLICE

F/O TX/RX — ETHERNET TRANSCEIVER

CONNECTORS

TIMING SYSTEM--ST
DIG/ANA--------ST
ETHERNET-------ST

JUMPER (THICK LINE)

PIGTAIL (THIN LINE)

NOTE---ETHERNET IS SPECIAL EQUIPTMENT
J. GOULD IS THE ENGINEER

INTERBUILDING CABLE IS A 24 FIBER LOOSE TUBE ARMORED CABLE,
EXCEPT 921-919 WHICH IS 18 FIBER CABLE.

ALL CABLES ON THIS PAGE ARE 62.5/125 FIBER.

FILE NAME: AGSFOC5.SCH

REF DESIGNATOR	ITEM NO	QTY	DESCRIPTION	MATL.DWG NO JINL.NO
XXX ± FRAC ± ANG ±			MAX MIN.	BROOKHAVEN NATIONAL LABORATORY ASSOCIATED UNIVERSITIES, INC. UPTON, N.Y. 11973
TOLERANCE			BREAK SHARP EDGES	
JOB NUMBER	NEXT ASSEMBLY		NO PER ASS'Y	AGS FIBER INTERCONNECT
12/16/96			A3	G18 LINE
DATE	MATERIAL	SCALE	Q.A.	SHEET 5 OF 8
EK/PP/PS	P. STEIN	P.S.	BRO	D36-E1126 -4 A
DRAWN BY	CHECKED BY	ENG.APP	SUPV'R APP	DRAWING NUMBER REV