REV	ZONE	DESCRIPTION	BY	DATE	CKR	APP
B	PG. 2,3	ECN # 0772	EDK	4/8/93	P.S.	P.S.
C	PG. 2,3	ECN # 0921	C.D.	4/8/93	P.S.	P.S.
D	PG1,4-8	ECN # 1154	PS	26oct95	P.S.	P.S.

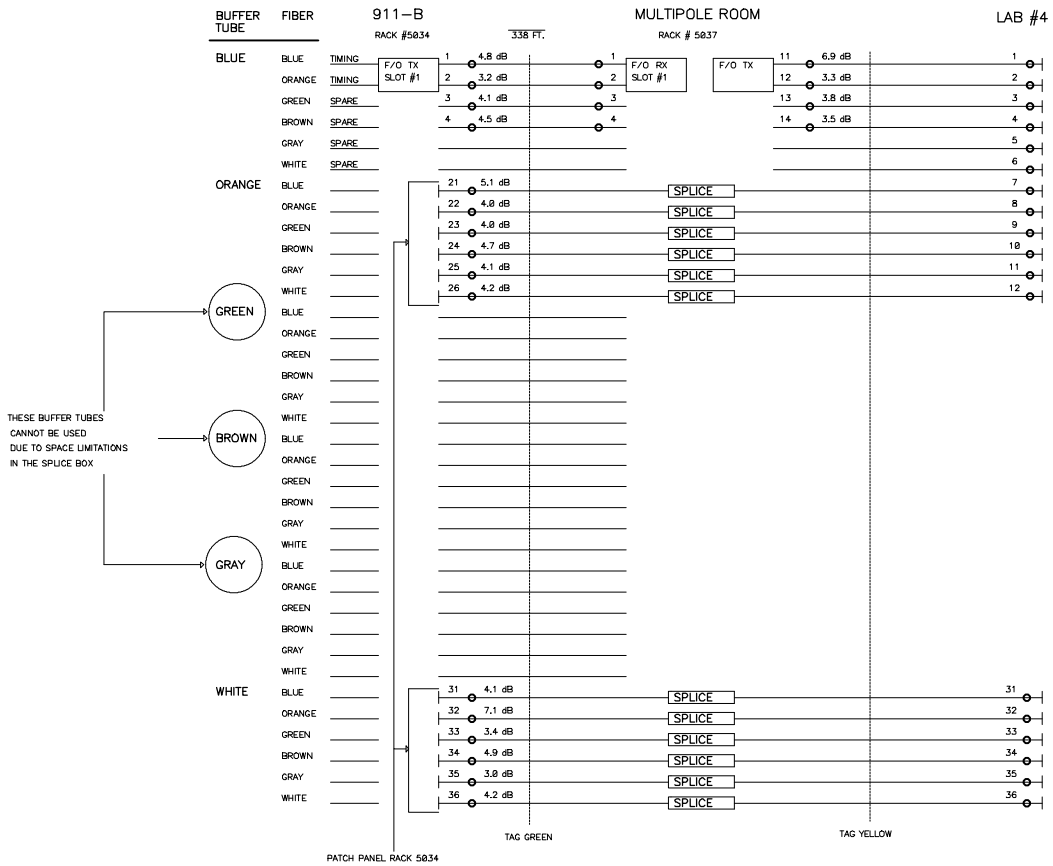

CONNECTOR/SPLICE

F/O — F/O TX OR RX CARD
D36-E108
D36-E111

SPLICE — FUSION SPLICE

DOMAIN — OPTELECOM MODEM

CONNECTORS

TIMING SYSTEM--ST
DIG/ANA---------ST
DOMAIN----------SMA

INTERBUILDING CABLE IS A 36 FIBER LOOSE TUBE ARMORED CABLE.
4 METER LONG TIGHT BUFFERED CONNECTORIZED PIGTAILS ARE SPLICED AT THE RACKS.
ALL CABLES ARE 50/125 FIBER.

FILE NAME: AGSFOC1.SCH

REF DESIGNATOR	ITEM NO	QTY	DESCRIPTION	MATL.DWG NO JINL.NO

XXX ± FRAC ± ANG ±	MAX MIN.		BROOKHAVEN NATIONAL LABORATORY ASSOCIATED UNIVERSITIES,INC. UPTON,N.Y.11973
TOLERANCE	BREAK SHARP EDGES		
JOB NUMBER	NEXT ASSEMBLY	NO PER ASS'Y	AGS FIBER INTERCONNECT
5/26/92		A3	MP LINE
DATE	MATERIAL / SCALE	Q.A.	SHEET 1 OF 8
ED K	P. STEIN / P.S.	BRO	D36-E1126 -4 D
DRAWN BY	CHECKED BY / ENG.APP	SUPV'R APP	DRAWING NUMBER / REV