ACS, BNL 7/15/99 4:19 PM 911-C_TIMING_LINKS.dwg

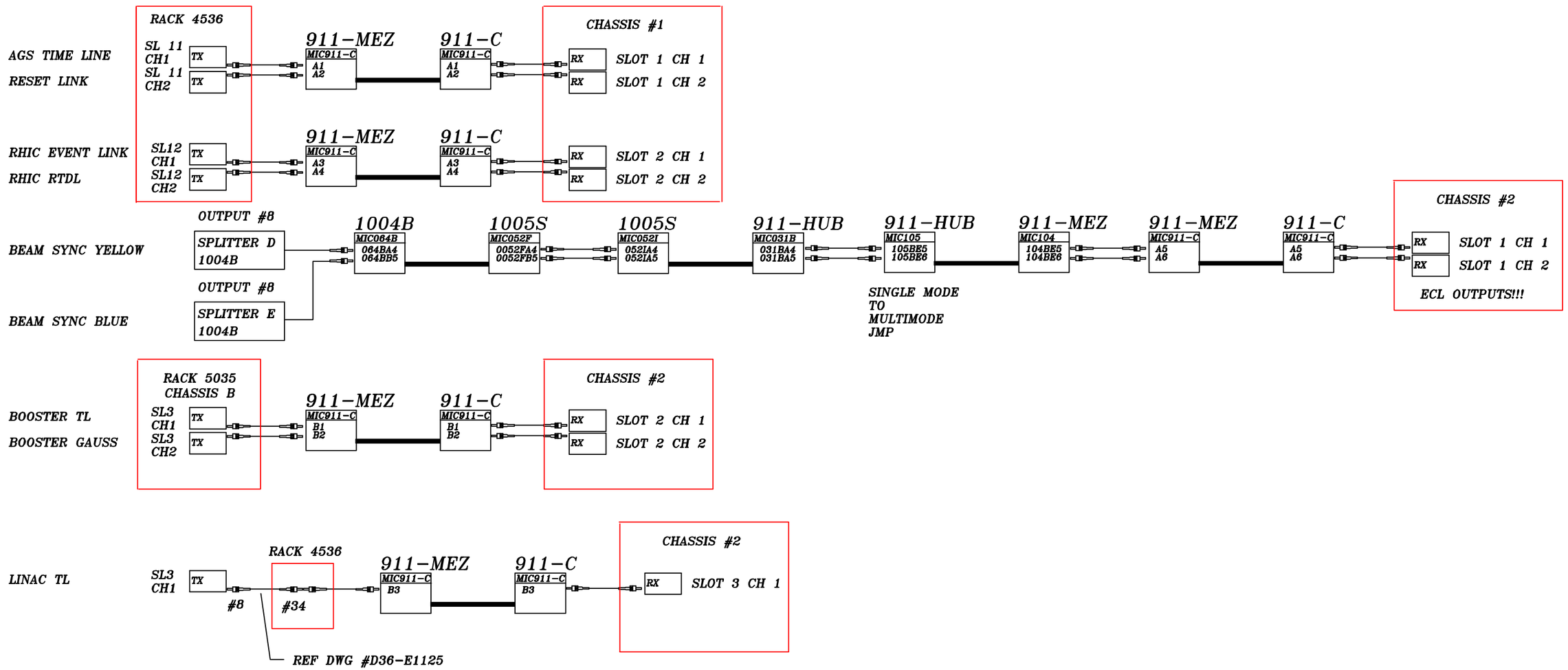


| -3 | -2 | -1 | REF DESIGNATOR | ITEM NO. | DESCRIPTION | MAT'L DWG NO.,BNL NO. |
|---|---|---|---|---|---|---|
| QTY REQD | | | | | | |

INTERPRET IN GENERAL ACCORDANCE WITH ASME Y14.24M-1989

UNLESS OTHERWISE SPECIFIED DIMENSIONS ARE IN INCHES

DECIMAL TOLERANCES
.X ±.030
.XX ±.015
.XXX ±.005
ANGULAR TOLERANCE
± .5°

OUTSTANDING ECN

NA FINISH

BREAK SHARP EDGES
MAX. XX MIN. XX

| | | |
|---|---|---|
| Q.A. CATEGORY A-3 | | DATE |
| DRAWN BY | Ed Koropsak | 7/14/99 |
| CHECKED BY | | |
| DESIGN APPROVAL | | |
| ENGINEER APPROVAL | R. MICHNOFF | |
| SUPVR. APPROVAL | | |

NEXT ASSEMBLY

BROOKHAVEN NATIONAL LABORATORY
UPTON, N.Y. 11973

RHIC CONTROLS

FIBER OPTIC PATHS

911-C TIMING LINKS

SIZE D | DRAWING NUMBER 94028XXX | REV. A

MATERIAL: ——— | SCALE: FULL | WEIGHT: – | SHEET 1 OF 1

*AUTOCAD