PHENIX Ready for Beam

Mike Leitch (LANL) – PHENIX Run Coord.

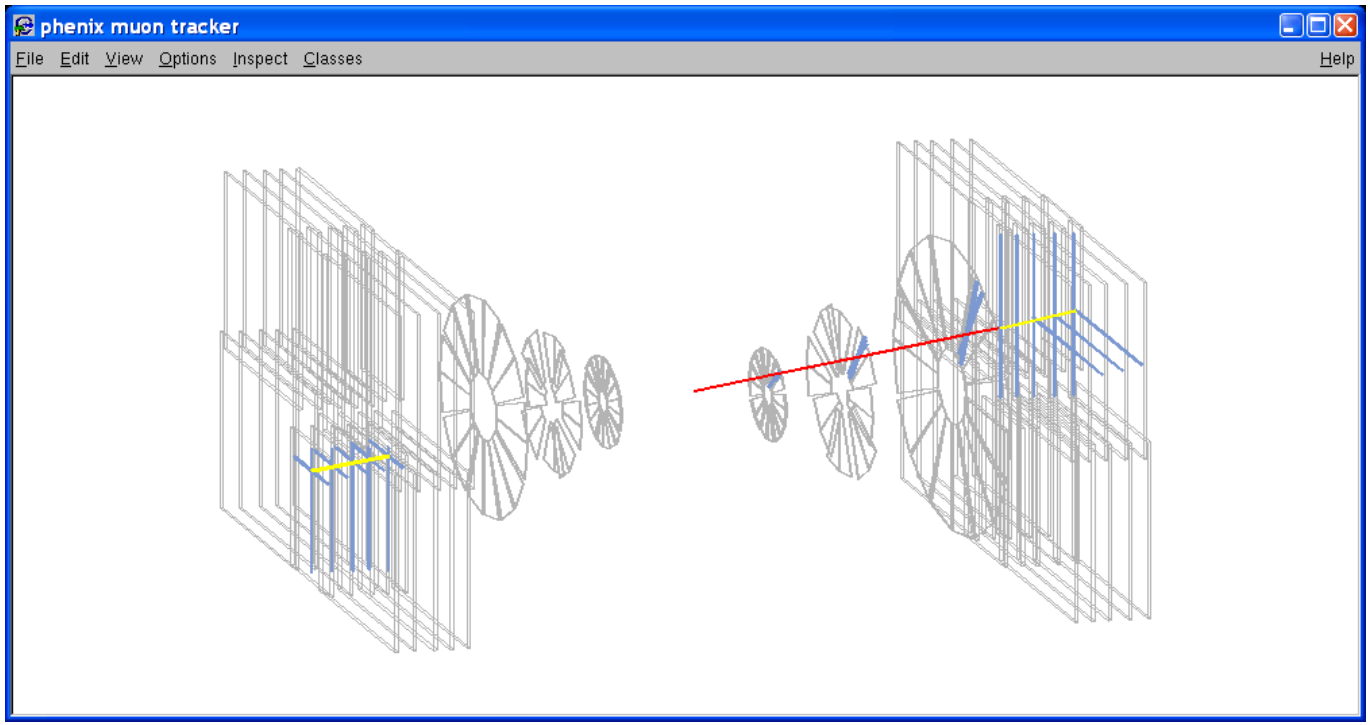

Cosmic rays with muon magnets ON – if no beam

Access during the day useful – mainly for HBD

PHENIX starts 5-person shifts Feb 27th
(now 3-person shifts)

Hadron Blind Detector (HBD)

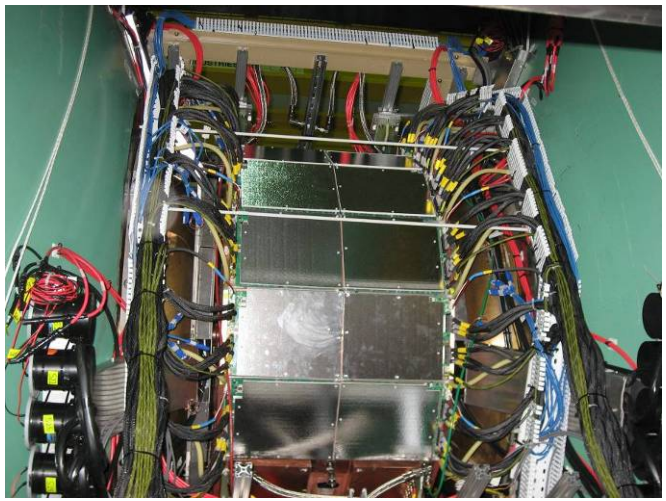

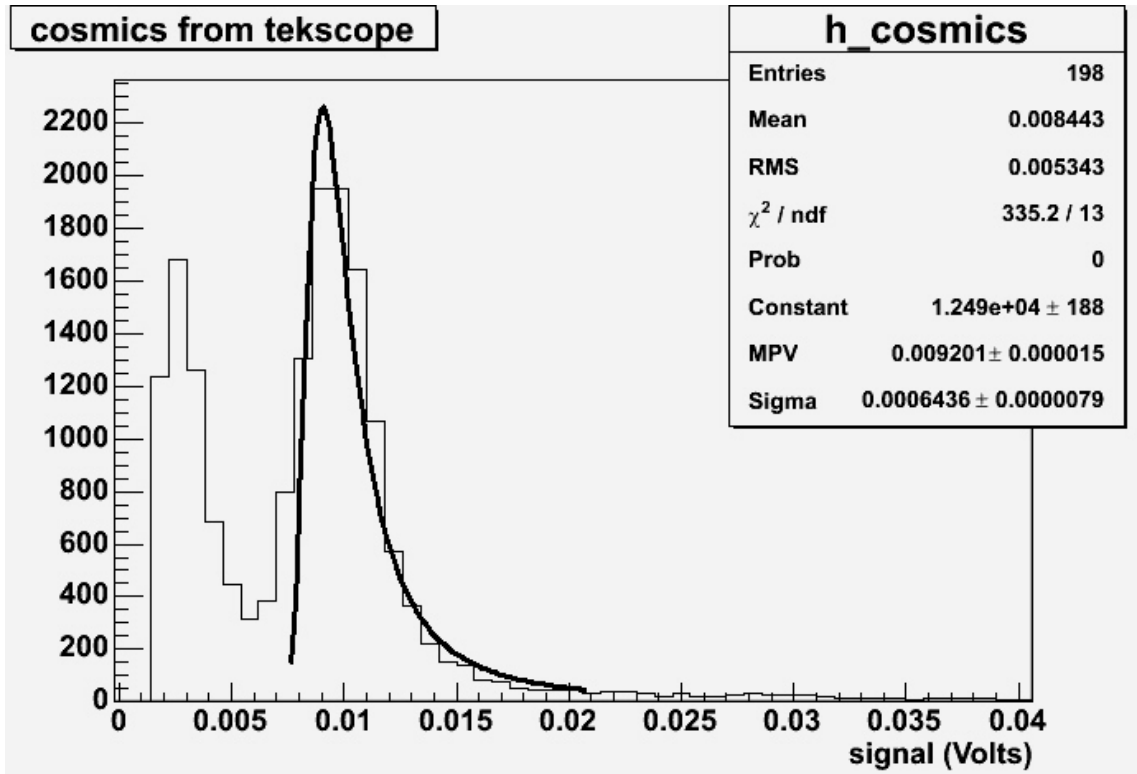

Cosmic Ray peak in one HBD Triple-GEM

- the noise is clearly separable from the cosmic peak
- the gain seems to be what we expect it to be.