Building 911C
P.O. Box 5000
Upton, NY 11973-5000
Phone 631 344-4531
Fax 631 344-5954
hershcovitch@bnl.gov

Memo

DATE: *December 1, 2006*

TO: RHIC E-Coolers

FROM: *Ady Hershcovitch*

SUBJECT: **Minutes of the November 17, 2006 & December 1, 2006 Meetings**

Present at the November 17, 2006 meeting: Ilan Ben-Zvi, Alexei Fedotov, Wolfram Fischer, Harald Hahn, Ady Hershcovitch, Dmitry Kayran, Jorg Kewisch, Vladimir Litvinenko, William Mackay, David Pate, Eduard Pozdeyev, Thomas Roser, Dejan Trbojevic.

Present at the December 1, 2006 meeting: Ilan Ben-Zvi, Peter Cameron, Alexei Fedotov, Wolfram Fischer, Harald Hahn, Ady Hershcovitch, Dmitry Kayran, Jorg Kewisch, Vladimir Litvinenko, William Mackay, Eduard Pozdeyev, Thomas Roser.

Topic discussed: ERL Status

ERL Status: during the meetings Ilan gave a comprehensive presentation on the status of the ERL (energy recovery LINAC) project and its various sub-systems. The ERL is the major experimental effort that is geared towards electron beam cooling and RHIC II. Of all the RHIC II projects, electron beam cooling will be the largest contributor (by a substantial factor) to luminosity enhancement in RHIC. In addition the ERL is a good accelerator science project that includes the development of a high current superconducting RF (SRF) electron gun and a high current superconducting ERL. This effort will benefit other projects including e-RHIC.

The ERL is being set up in building 912. Although its main objective is to reduce the risk and costs of the RHIC II project, it will be a facility for accelerator experiments like a unique study of electron beam halos, for which there are no theoretical or experimental studies.

To summarize the status: the infrastructure in 912 (electrical power and cooling water distributions, control room, equipment room, block house etc.) is more than 90% complete. SRF gun, design complete, awaiting AES purchase order signatures to commence fabrication. The cavity is still at JLAB. There was an indium accident at JLAB that will require the need for large amounts of nitric acid to clean the cavity. Also must bake out at 120 C to mitigate Q reduction with increase RF power (an interesting effect noticed: Q does not seem to be affected by radiation). Nevertheless, 18.8 mV/m were already reached with a Q of $3x10^9$. Laser system is expected to be at BNL in about 7 months; parts for cathode deposition system and transfer cart are to be ordered in FY08.
Below is Ilan's presentation, which includes status details, photos, and diagrams.

Status of the ERL

- The ERL in building 912 is the major experimental R&D towards RHIC II.
- The objective is to reduce the risk and costs of the RHIC II project.
- Critical items to be tested:
  - High-current / brightness SRF gun
  - High current SRF cavity
  - ERL magnet loop inc. diagnostics, dump etc.

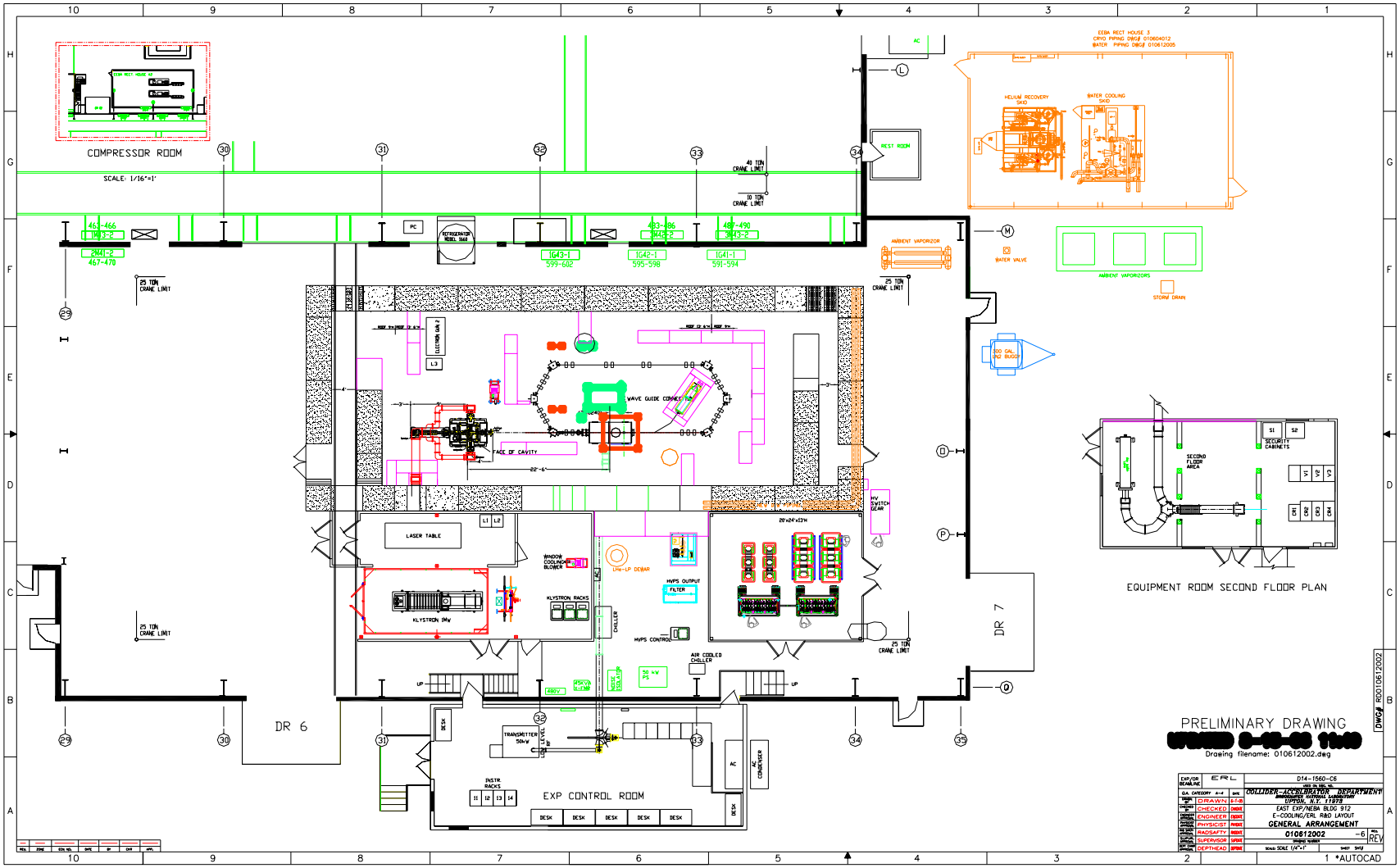
COMPRESSOR ROOM
SCALE: 1/16"=1'
EEBA RECT HOUSE 3
CRYO PIPING DWG# 010604012
WATER PIPING DWG# 010612005
HELIUM RECOVERY SKID
WATER COOLING SKID
REST ROOM
AMBIENT VAPORIZOR
WATER VALVE
AMBIENT VAPORIZORS
STORM DRAIN
40 TON CRANE LIMIT
10 TON CRANE LIMIT
25 TON CRANE LIMIT
REFRIGERATOR MODEL 1668
WAVE GUIDE CONNECT
FACE OF CAVITY
LASER TABLE
KLYSTRON IMW
KLYSTRON RACKS
WINDOW COOLING BLOWER
LHe-LP DEWAR
MVPS OUTPUT FILTER
MVPS CONTROL
CHILLER
AIR COOLED CHILLER
MV SWITCH GEAR
20'x24'x13'H
TRANSMITTER 50kW
INSTR. RACKS
EXP CONTROL ROOM
DESK
AC CONDENSER
DR 6
DR 7
SECOND FLOOR AREA
SECURITY CABINETS
EQUIPMENT ROOM SECOND FLOOR PLAN
PRELIMINARY DRAWING
Drawing filename: 010612002.dwg
DWG# R0010612002
EXP/DR DEAN/LINE
ERL
D14-1560-C6
Q.A. CATEGORY A-4
DRAWN
CHECKED
ENGINEER
PHYSICIST
RADSAFTY
SUPERVISOR
DEPTHEAD
COLLIDER-ACCELERATOR DEPARTMENT
BROOKHAVEN NATIONAL LABORATORY
UPTON, N.Y. 11973
EAST EXP/NEBA BLDG 912
E-COOLING/ERL R&D LAYOUT
GENERAL ARRANGEMENT
010612002
-6
REV
SCALE 1/4"=1'
1 *AUTOCAD

Conventional Facilities

- Complete (90% or more)
  - Electric Power Distribution
  - Cooling Water System
  - Control Room
  - Equipment Room
  - Block house
  - Klystron PS Enclosure

Conventional Facilities

- Remaining Work
  - ODH Ventilation
  - Smoke Detection
  - HVAC (Laser Room, Equipment Room, Blockhouse, Klystron PS Enclosure)
  - Blockhouse Interior Shielding
  - PS to Klystron Tray
  - Ring Tray

1. LITE CONCRETE ROOF BEAMS
2. EXHAUST VENT (4 PLACES)
3. RF CAVITY
4. 50 KW WAVE GUIDE
5. LOW LEVEL RF
6. 50KW TRANSMITTER
7. BEAM DUMP
8. ELECTRON GUN
9. WINDOW BLOWER
10. LITE CONCRETE SHIELDING BLOCKS
11. AIR CONDITIONER
12. 1MW WAVE GUIDE
13. LITE CONCRETE PORT BLOCK (2 PLACES)
14. HEAVY CONCRETE SHIELDING
15. HIGH VOLTAGE PS HOUSE
16. CONTROL ROOM
17. EQUIPMENT BUILDING
18. ENERGY RECOVERY LINAC (ERL)
19. SECURITY CABINETS
20. VACUUM RACKS
21. CRYO RACKS
22. DI WATER RETURN / SUPPLY
25. NEBA BUILDING 912
26. LHe DEWAR
27. LASER ROOM
29. 1MW KLYSTRON
30. DIPOLE MAGNET
31. QUADRUPOLE MAGNET
32. EEBA RECT HOUSE #3
33. HELIUM RECOVERY SKID
34. WATER COOLING SKID
35. AMBIENT VAPORIZERS
36. HV SWITCH GEAR
37. HELIUM RECOVERY LINES
38. 1MW DUMMY LOAD
39. 1MW CIRCULATOR
40. 50KW CIRCULATOR
41. 1MW KLYSTRON SHIELD
42. BALLAST TANK
43. TRAY
44. LN_2 DEWAR

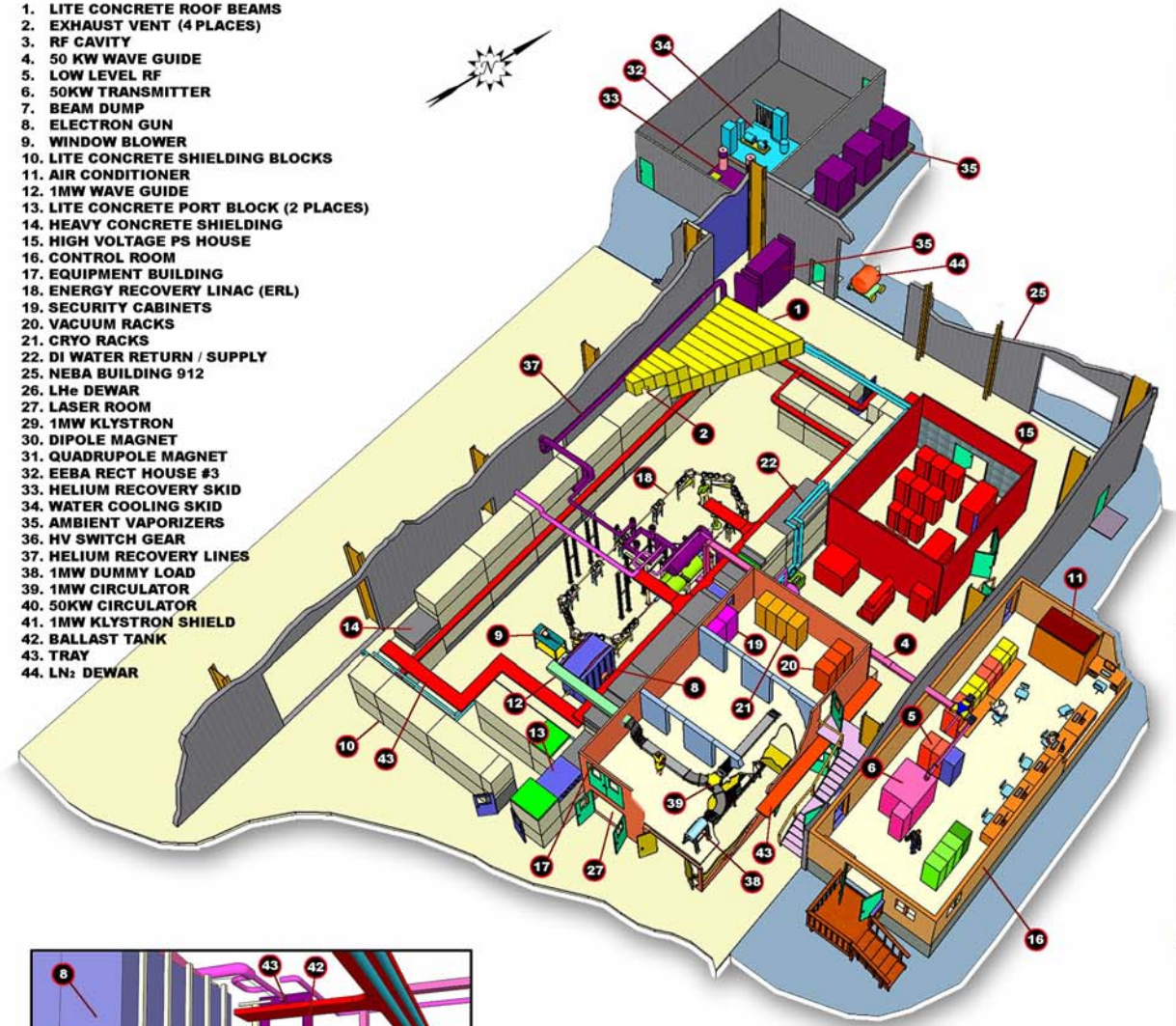

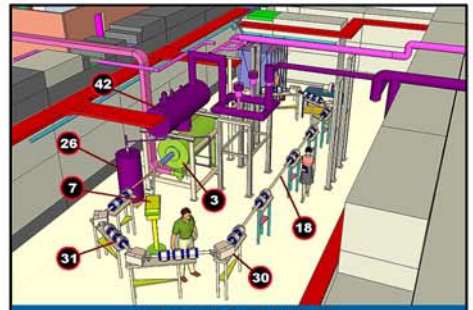

VIEW LOOKING SOUTH EAST - ERL

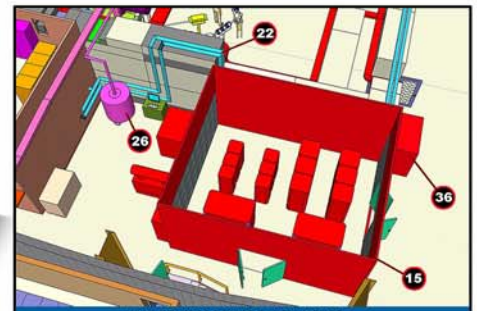

HIGH VOLTAGE POWER SUPPLY HOUSE

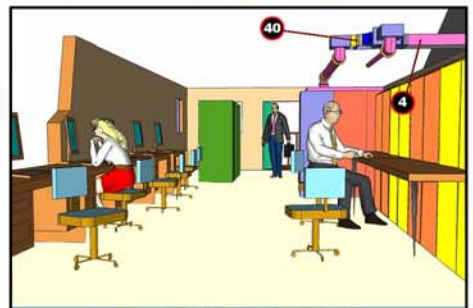

VIEW LOOKING SOUTH - CONTROL ROOM

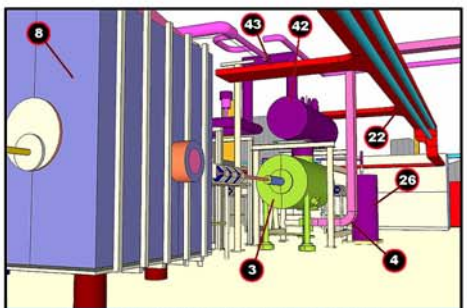

VIEW LOOKING NORTH - EAST SHIELD WALL NOT SHOWN

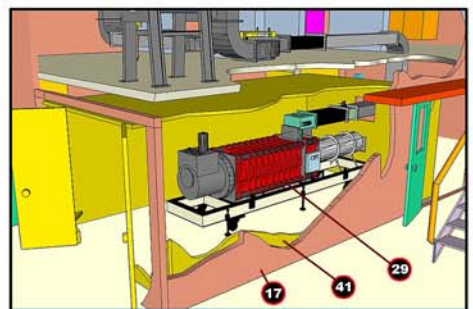

VIEW LOOKING NORTH WEST - 1MW KLYSTRON

BROOKHAVEN
NATIONAL LABORATORY
COLLIDER - ACCELERATOR DEPARTMENT

ERL GENERAL LAYOUT

FILE 001061036-REV E
RIPP BOWMAN 7-17-06

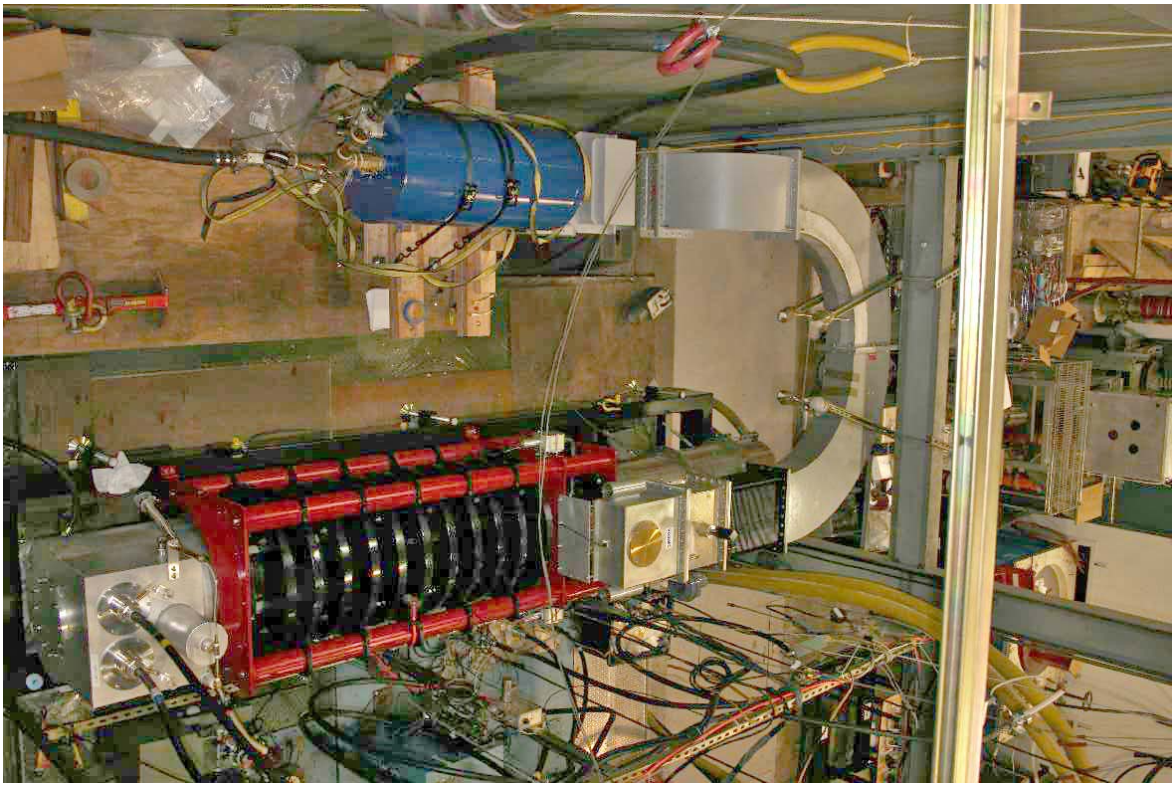

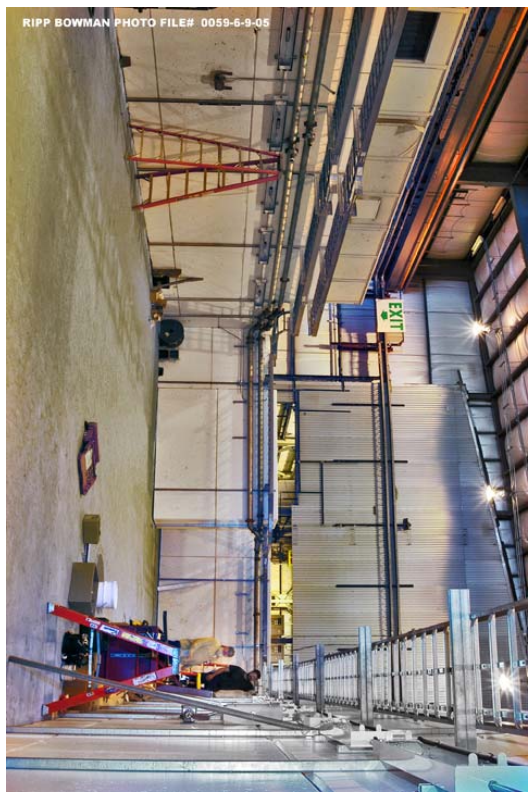
RIPP BOWMAN PHOTO FILE# 0059-6-9-05
EXIT

RIPP BOWMAN PHOTO FILE# 0041-6-9-05

RIPP BOWMAN PHOTO FILE# 0069-6-06

RIPP BOWMAN PHOTO FILE# 0044-6-9-05

RIPP BOWMAN PHOTO FILE# 0014-6-9-05

R&D ERL and E-Cooler beam parameters

	R&D prototype ERL (result of PARMELA simulation)		Required for e- cooling
	High average current	High charge per bunch	
Charge per bunch, nC	1.4	5	5
Numbers of passes	1	1	2
Energy maximum/injection, MeV	20/2.5	20/3.0	54/5
Average current, mA	500	50	50 (100)
Injected/ejected beam power, MW	1.0	0.15	0.26 (.52)
Transverse emittances, mm*mrad	<3	<10	<4
Energy spread, $\delta E/E$	$3x10^{-3}$	$5x10^{-3}$	$4x10^{-4}$

- The prototype ERL will demonstrate the main parameters of the e-beam close to required for e-cooling
- The prototype will also serve as a test bed for studying issues relevant for very high current ERLs

Message from first GtD test planning meeting:

The first meeting shows up that there are two different regimes of operation:

1. **CW-mode** (repetition rate for GtD up to 50 MHz) to demonstrate stable high avrage current (up to 0.15 A) operation.
   a) Electron beam alignment (2,3 BPMs)
   b) Current and Energy measurement
   c) Halo studies (scrapers)
   d) anything else....

2. **Pulsed mode** (rep. rate 1-2 Hz) to beam dynamic study as much as possible for short running time.
   a) Charge per bunch up to 5 nC (current monitor)
   b) Maximum energy gain, maximum field
   c) Avrage energy and energy spread measurement (BPMs, screen)
   d) Emittance measurement (pepper-pot)
   e) Pulse to pulse stability measurement
   f) RF amplitude, laser phase synchronization impact
   g) Beam collimation at low current/ low energy (2MeV).
   h) anything else....

ERL layout

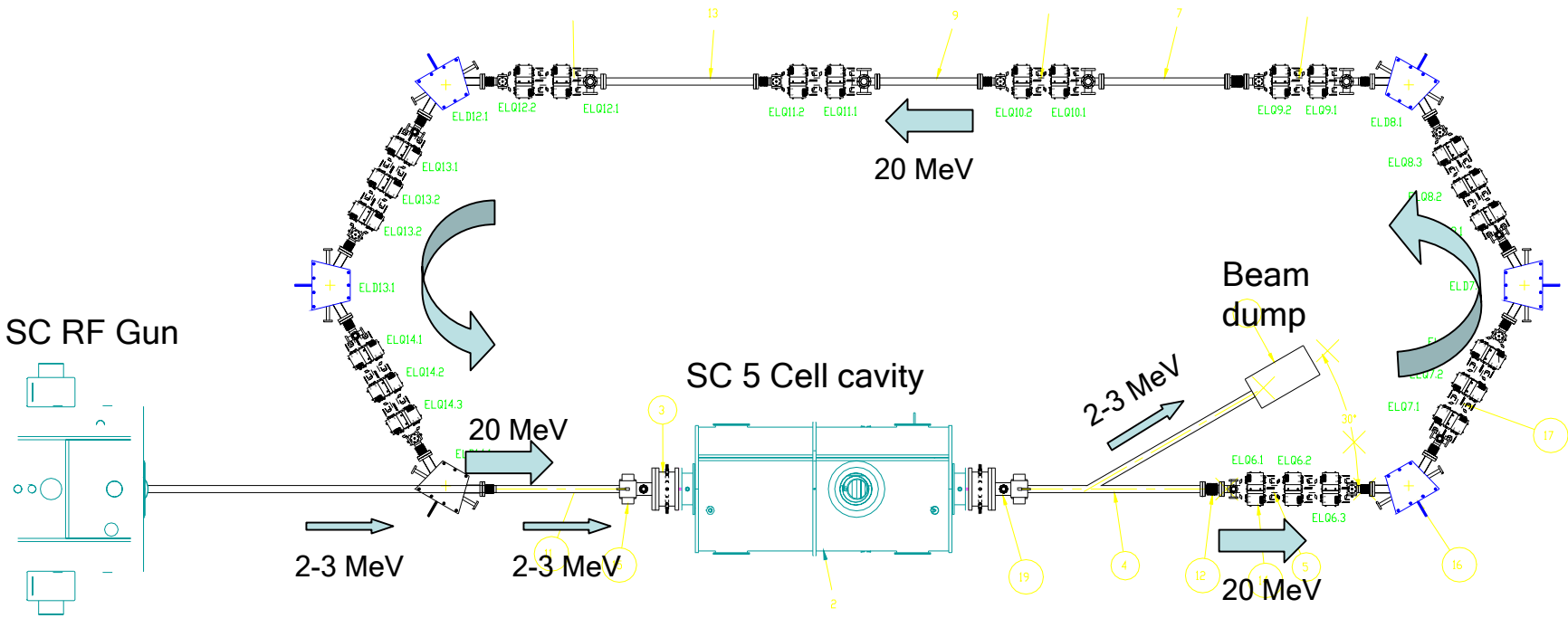

Injection part

ERL layout

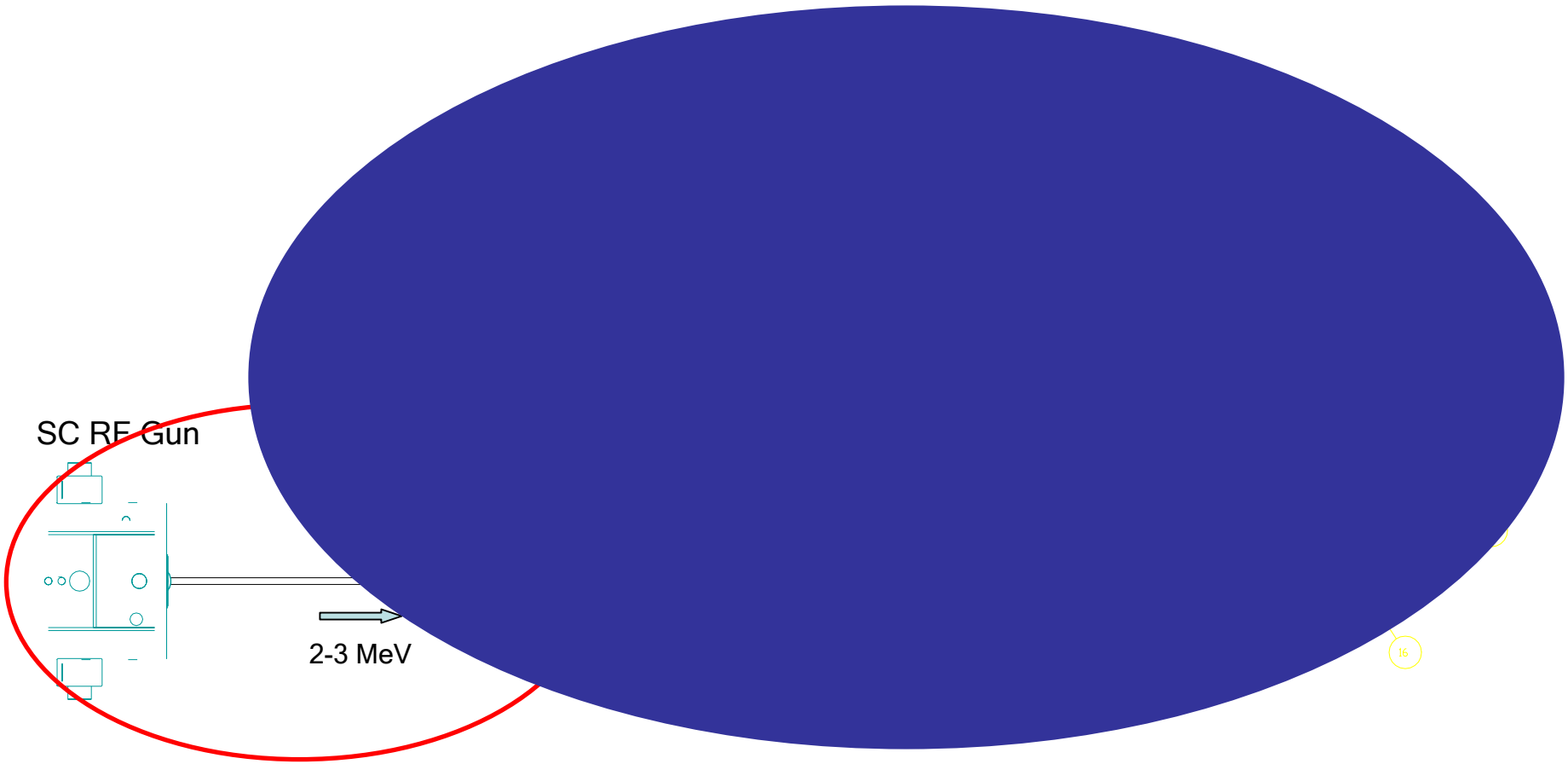

Injection part

Schematic layout of the ERL injection part:

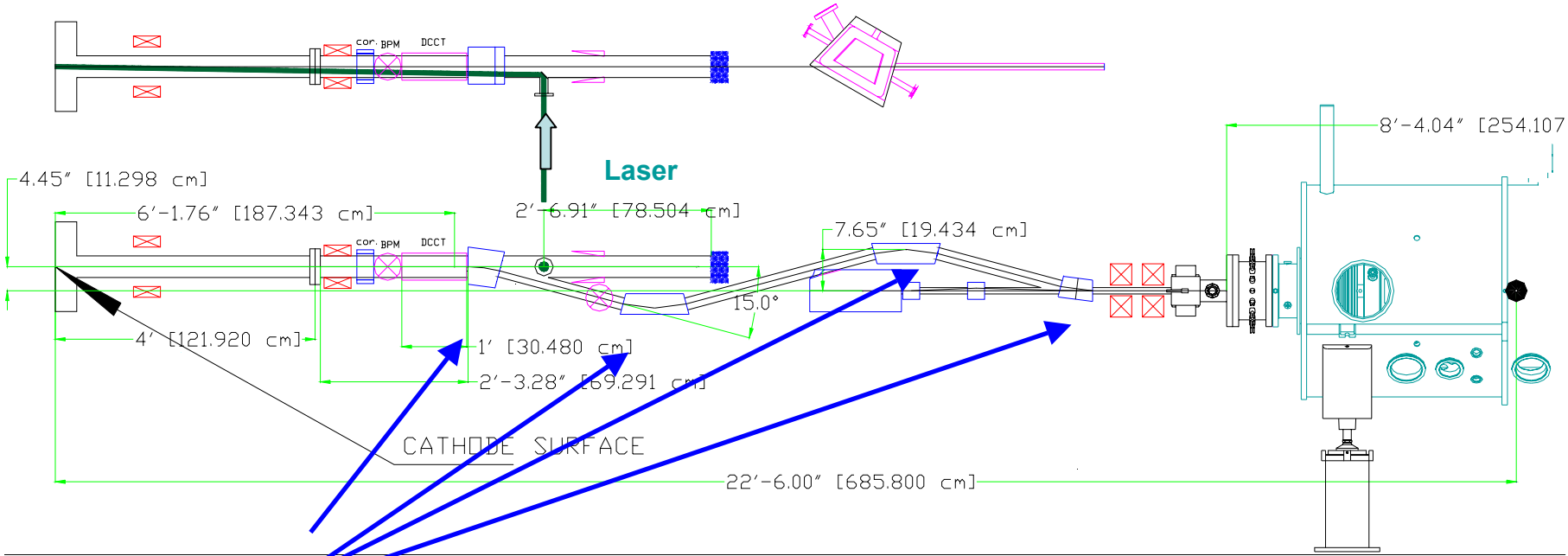

Dipoles:

Bend angles=15°, 30°

R=57 cm

Emittances evaluation in injection part of ERL, result of PARMELA simulation

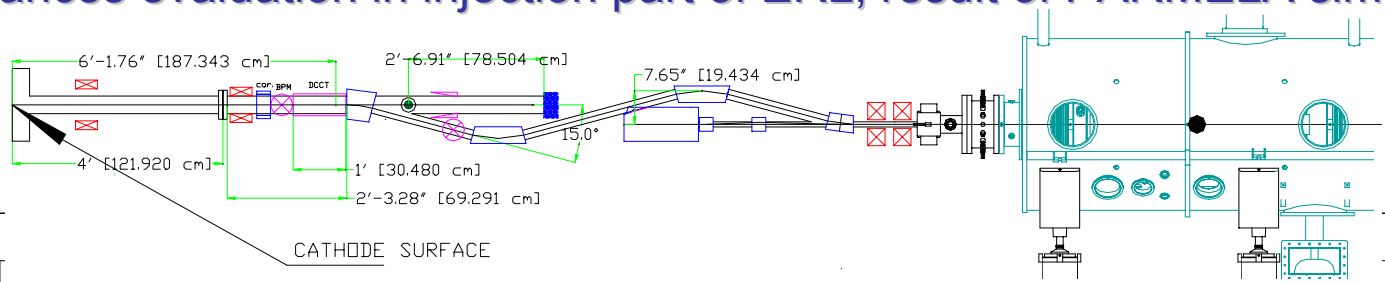

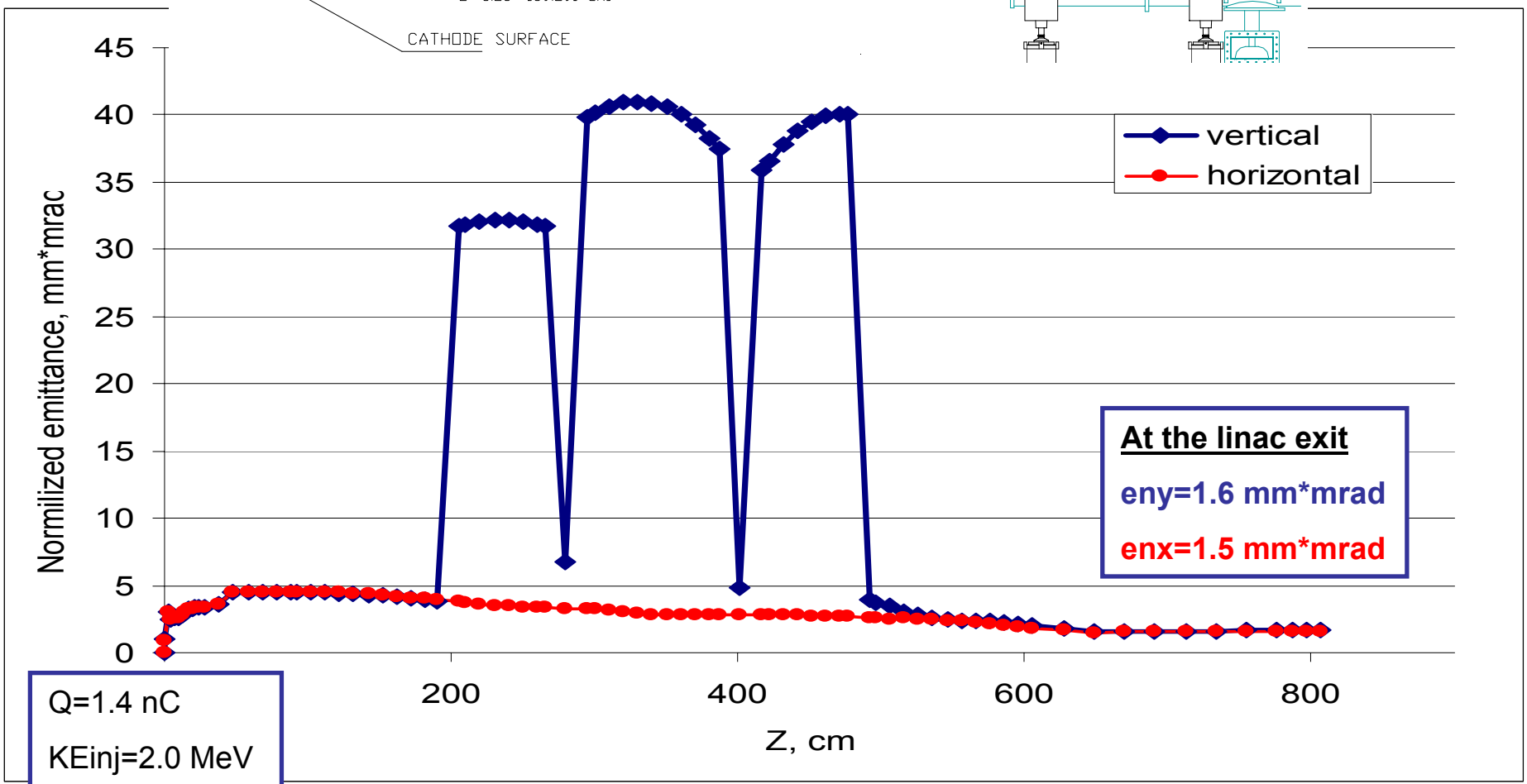

Q=1.4 nC

KEinj=2.0 MeV

Emax= 17 MeV

Beam size evaluation in injection part of ERL:

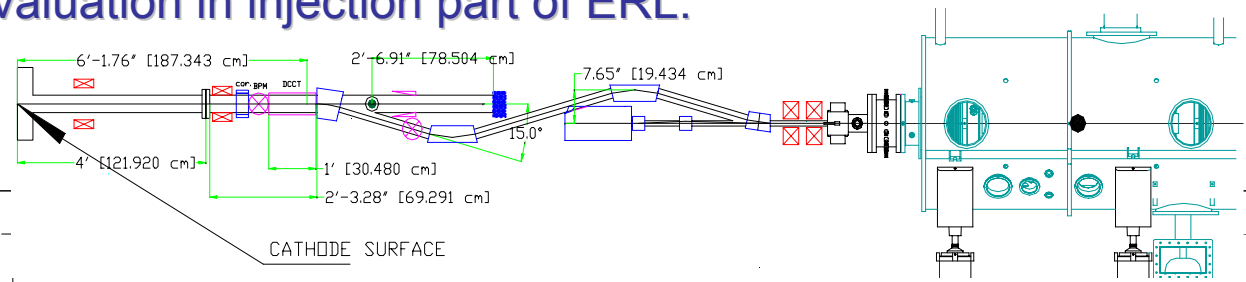

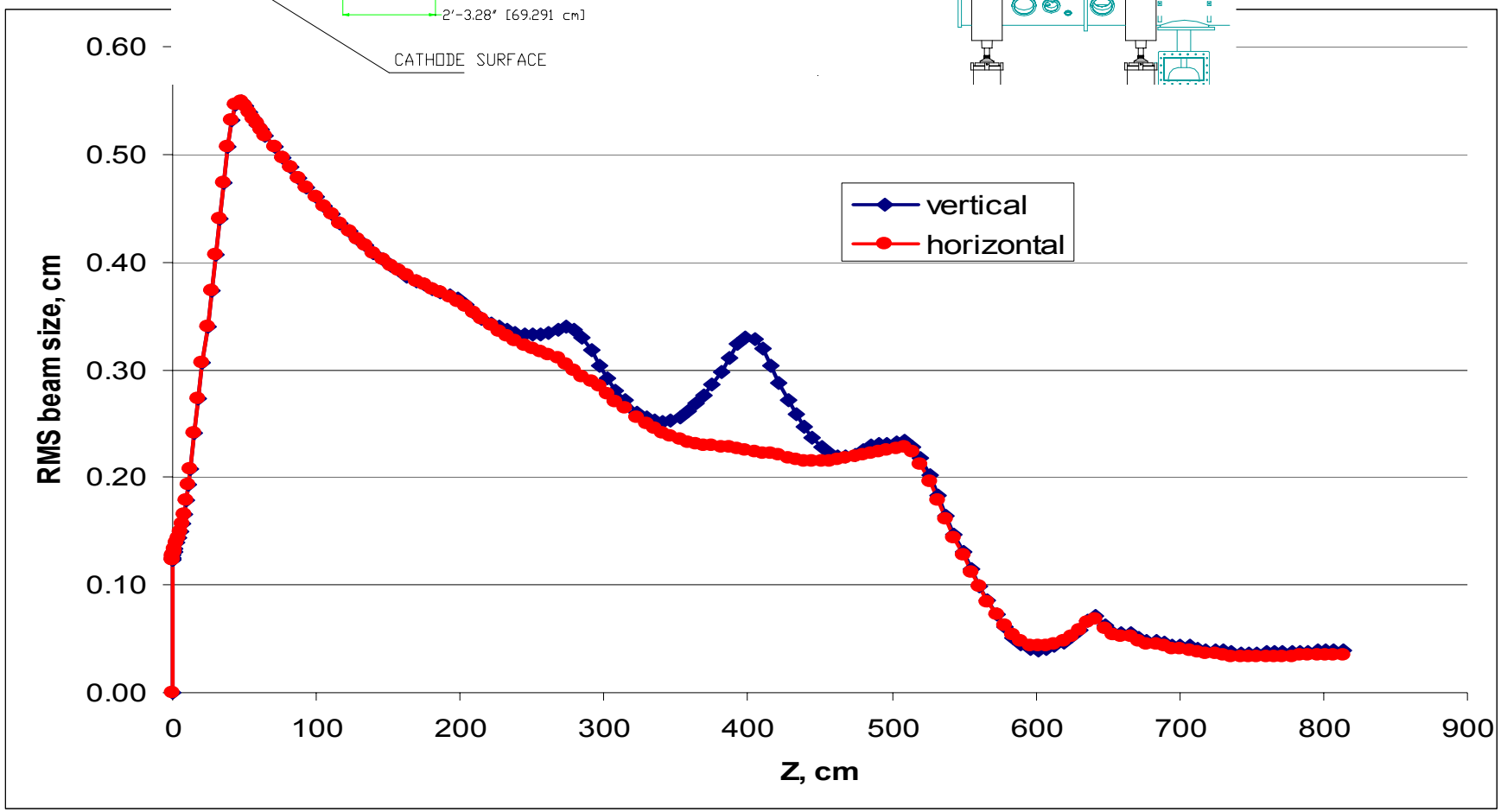

List of electron beam parameters to measure

Parameter to measure	Instrumentation	Pulsed regime ~ 10 Hz (up to 3nC per bunch)	Low current (up to 0.1 mA)	High Current (up to 0.15 A, 3nCx50MHz)
Current	Current monitor	YES	YES	YES
Position	BPMS	YES	YES	YES
Energy	Dipole+ BPMs	YES	YES	YES
Stability, jitter, drift	Dipole+ BPMs	YES	YES	YES
Halo	Collimator, Current monitor, Radiation Monitor	YES	YES	YES
Pulse length	Transition monitor+ Streak camera	YES	Possibly	NO
	Faraday-cup signal??	YES	YES	YES
	Compton scattering	YES	YES	YES
Beam size	Phosphor screen	YES	NO	NO
	Transition monitor	Possibly	YES	NO
Transverse Emittance	Pepper pot+ phosphor screen	YES	NO	NO
Anything else??	??			

List of laser beam parameters to measure

Parameter to measure	Instrumentation	Pulsed regime ~ 10 Hz	Low Power up to 1kHz	High Power 50 MHz
Power	Joule meter, power meter	YES	YES	YES
Transverse profile	Screen + CCD at the monument at equivalent location Video camera and monitor near the gun window for real time observation	YES	YES	YES
Longitudinal profile	Screen Streak camera Fast diode and fast sampling scope	YES No	YES YES	YES YES
Stability, jitter, drift	Using e beam parameters	YES	YES	YES
Phase stability	Using e beam parameters		YES	YES

SRF gun:
Fab contract nearing signature

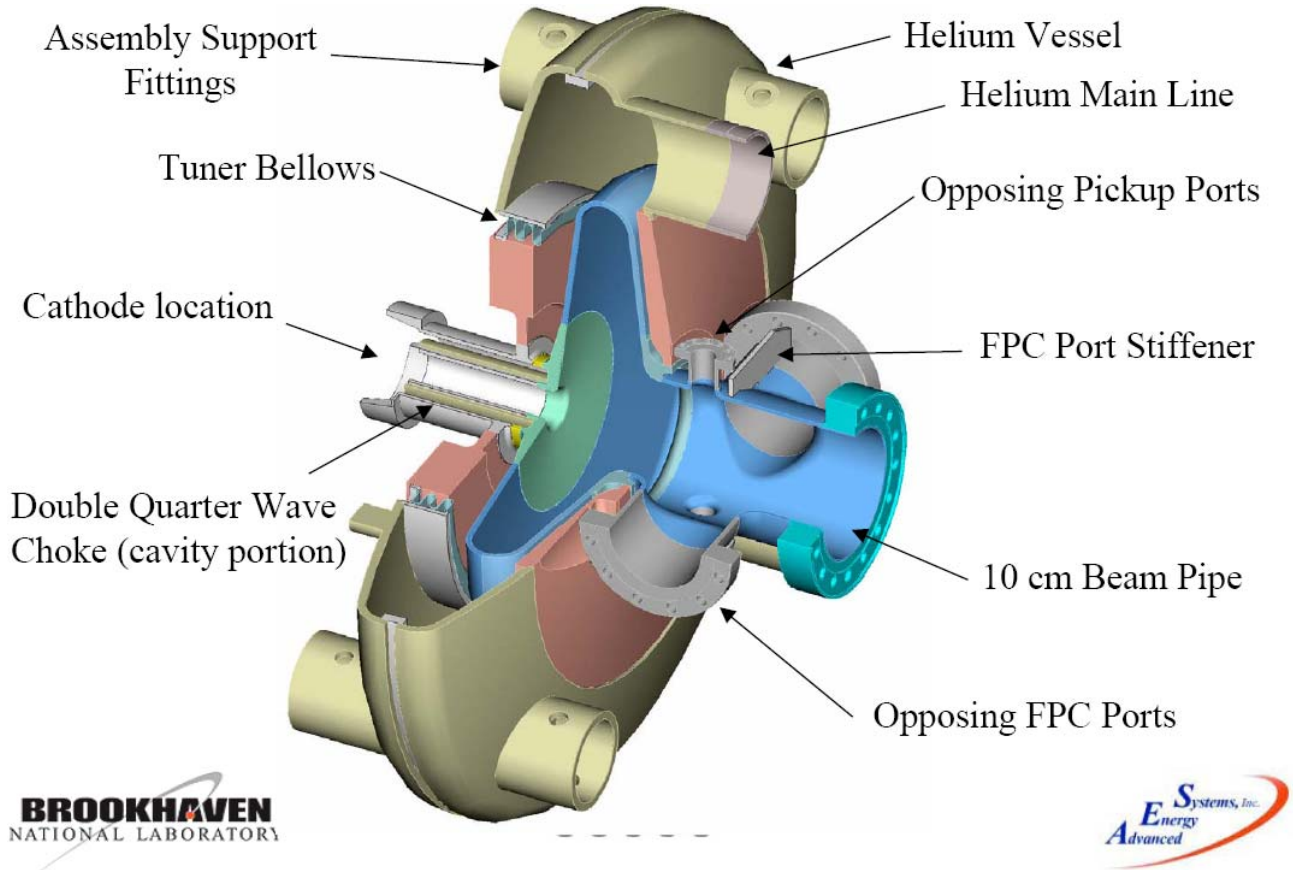

Cross-section

HTS solenoid

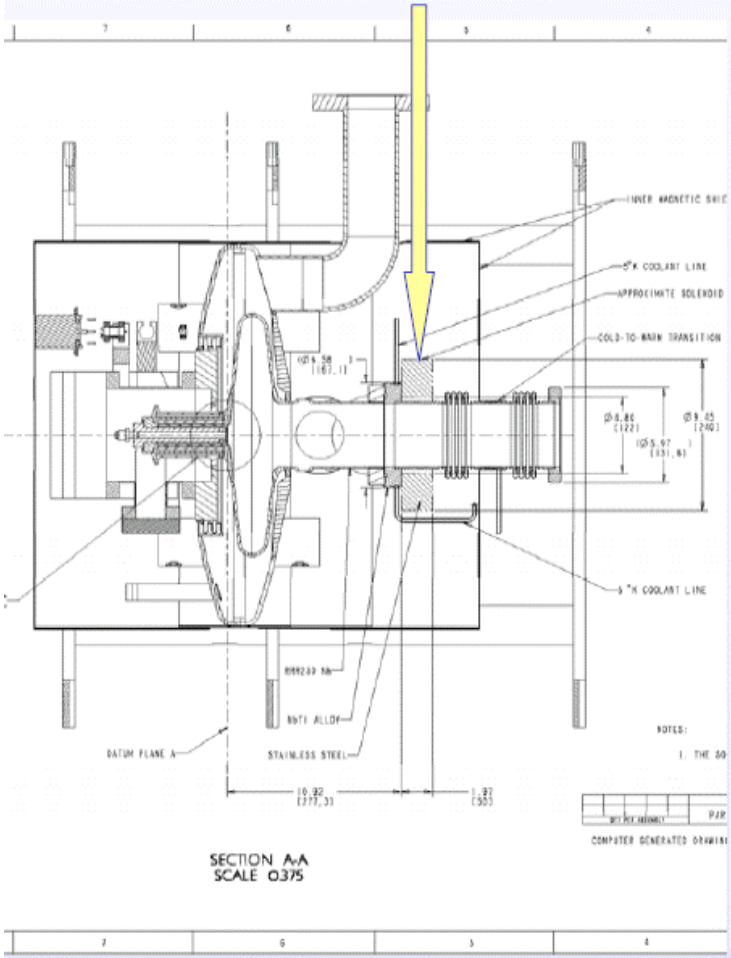

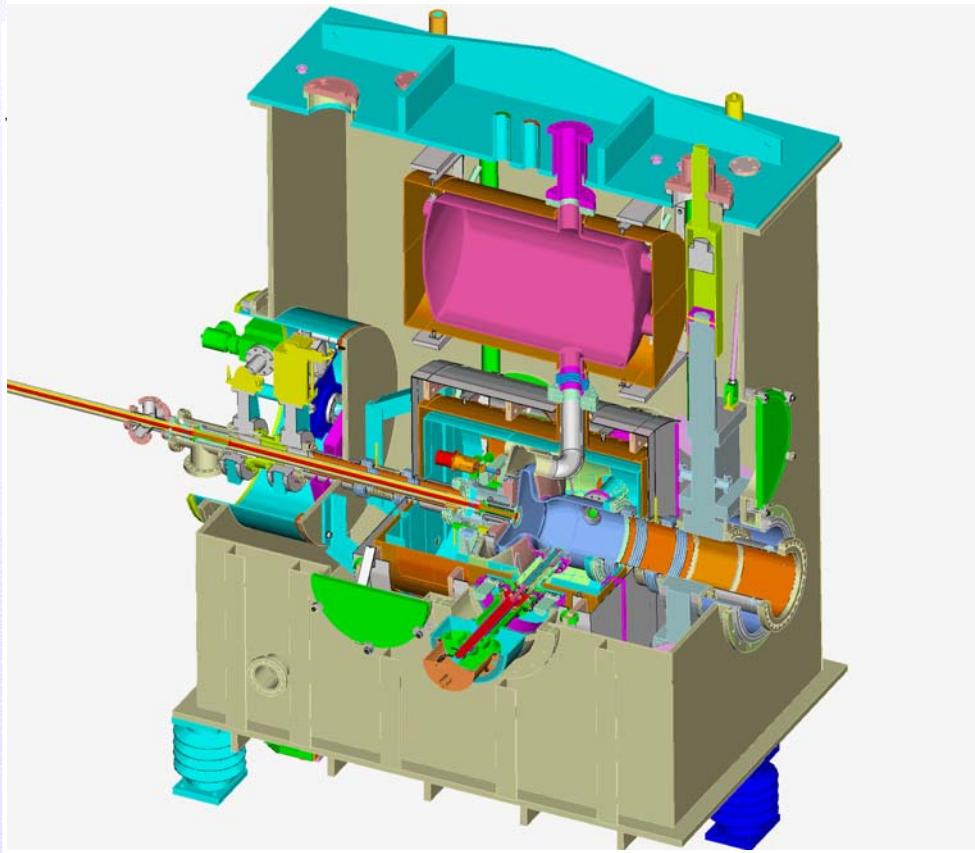

Contract nearly done!

BASE PERIOD

Goal No. 1……. Design & Fabrication of SRF e-Gun

OPTIONS

Goal No. 2……. Development/Design/Fabrication of FPC Conditioning Cart System

Goal No. 3……. Development/Design/fabrication of Cavity Process Tooling

Goal No. 4……. Development/Design/Fabrication of Cavity String Assembly Tooling

Goal No. 5……. High Temperature SC Solenoid Magnet

Goal No. 6……. Development/Design/Fabrication of e-Gun Injection System

Goal No. 7……. Development/Design/Fabrication of Beam Dump System

$1.95M Navy money due soon, more in FY08

BNL Goal - Title	AES Cost	Profit	AES Price
1: SRF e-Gun	$ 1,877,351	$ 187,735	$ 2,065,086
2: FPC Processing Cart	$ 349,112	$ 34,907	$ 384,019
3: Cavity Process Tooling	$ 151,876	$ 15,187	$ 167,063
4: Cavity String Assembly & Shipping Tooling	$ 244,199	$ 24,420	$ 268,619
5: HTS Solenoid Yokes	not quoted	not applicable	not quoted
6: e-Gun Injection System	not quoted	not applicable	not quoted
7: Beam Dump	not quoted	not applicable	not quoted
TOTAL=	$ 2,622,539	$ 262,248	$ 2,884,787

ECX Cavity Update

Effort to Date

Initial Plan

- Ship cavity to JLab
- Perform Heavy Chemistry, 200 um removal,
- Bake at 600 C,
- light chemistry, 20 um removal,
- Test in VTA, achieve 20 MV/m at Qo > 1e10
- Weld into He vessel
- Retest and measure 20 MV/m and Qo > 1e10
- Assemble into String and ship to BNL

Reality

- Initial chemistry, bake and chemistry as planned
- Initial 3 VTA tests yielded ~3 MV/m with a rapid drop in Q obviously heating related
- Heating phenomena found to result from Titanium half-nipples welded into NbTi beamline flange

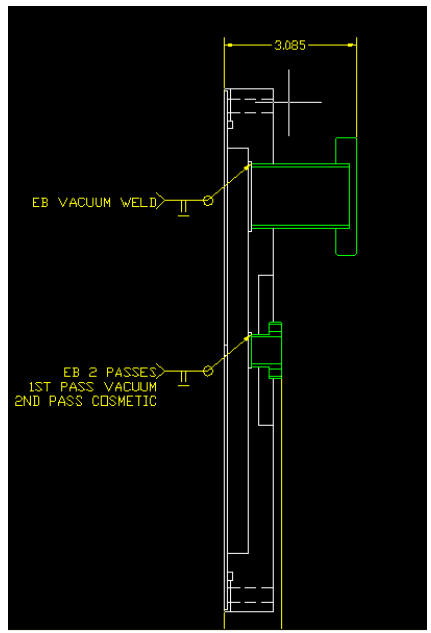

ECX Update

- Once NbTi flanges were identified as being defective they were replaced with two all Nb flanges

- This greatly improved our performance and we reached 15 MV/m at Qo= 4e9

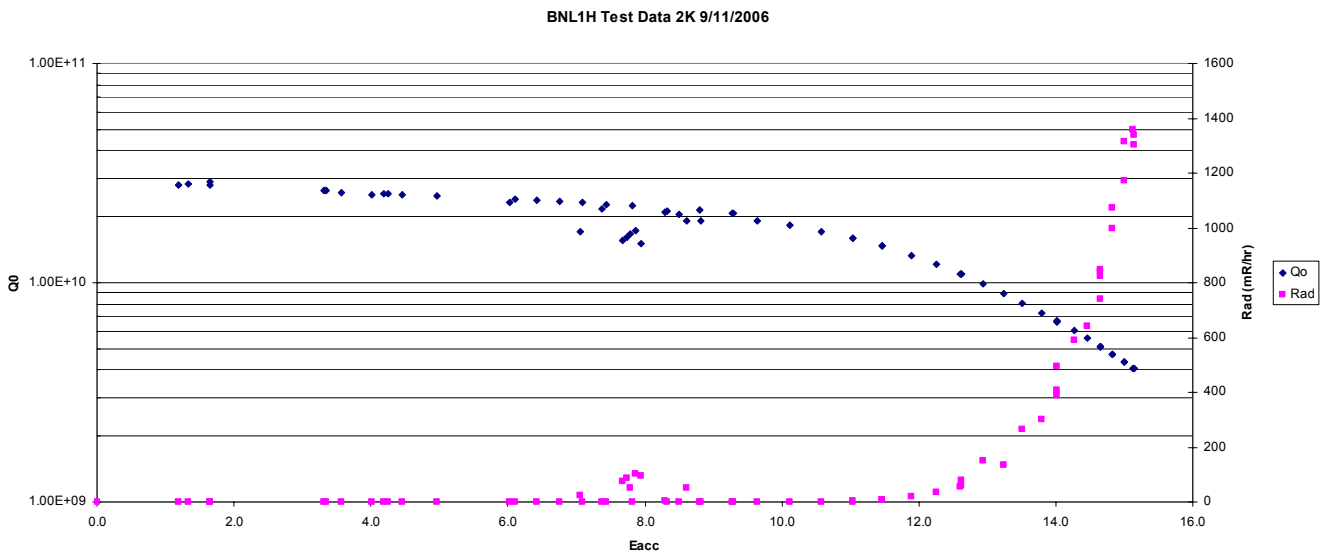

ECX Update

- Following this test we were encouraged by the increase in field, but disappointed in the overall performance so we set out to perform another light chemistry and longer high pressure water rinse as well as a low temperature bake in order to improve the performance of the cavity
- Unfortunately the low temperature bake suffered a loss of nitrogen circulation leading to the loss of one of the indium seals and contamination of the cavity

The cavity was removed from the VTA and a Helium cylinder and active vacuum pumping mounted so that we could He process the cavity. The cavity was then re-inserted into the VTA and testing continued. We He processed through several barriers and ended with **18.8 MV/m at 3e9**

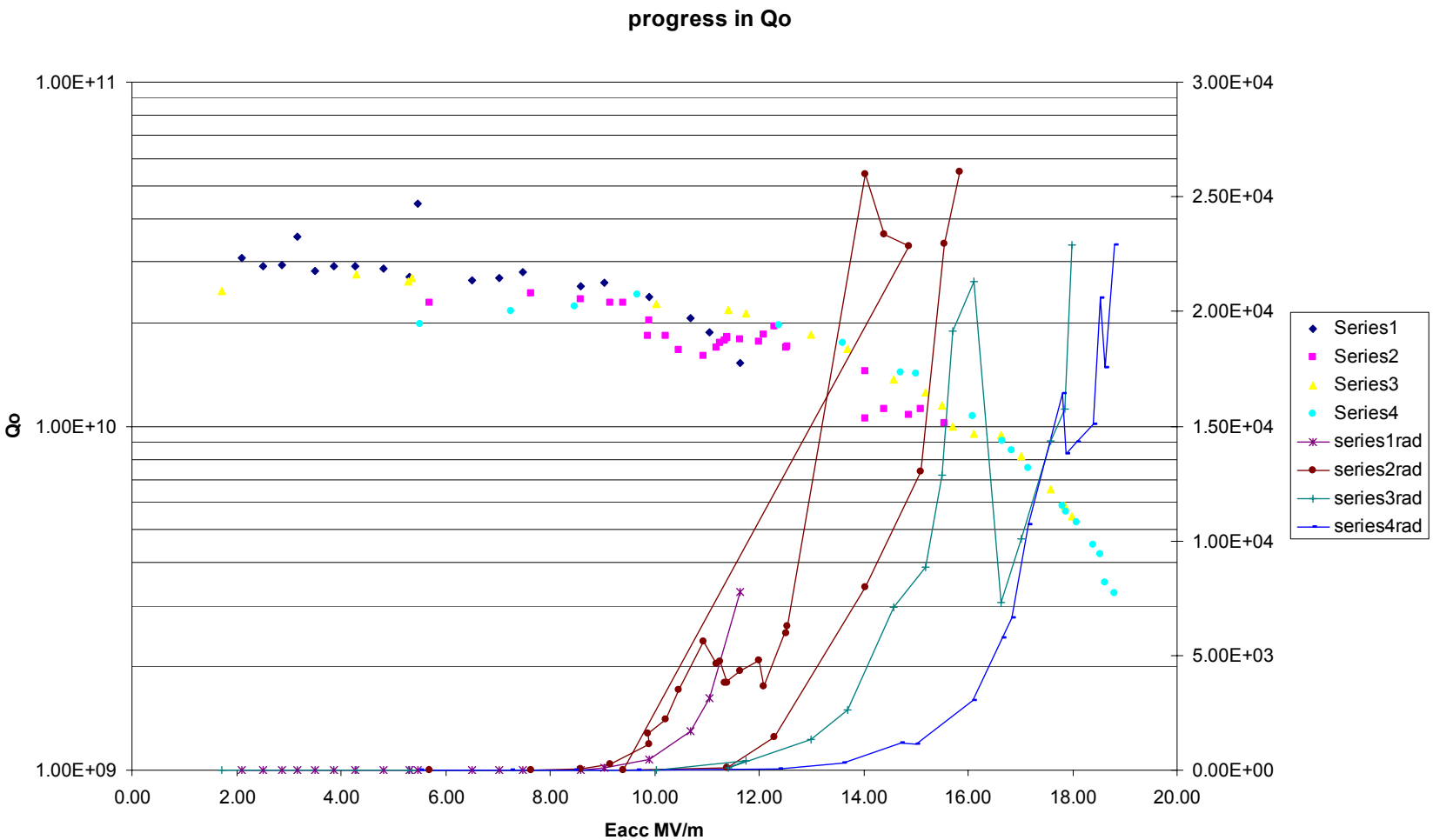

ECX Summary

- Cavity performance at 18.8 MV/m and Qo=3e9

- Since we have still not met our desired specification we have a few more process changes to make

1. Perform a full cavity nitric acid soak to remove any possible residual indium not removed during the first soak
2. Extend the High Pressure Rinse duration and only perform one assembly sequence instead of two to try and minimize cavity contamination
3. Add a HEPA filter system around the HPR system to help minimize particulate
4. Perform a 120 C bake to try and improve the Q slope

Jlab is going into a cryogenic shutdown for two weeks the beginning of December so I hope we can get the next test done before then.

ERL loop components in fabrication

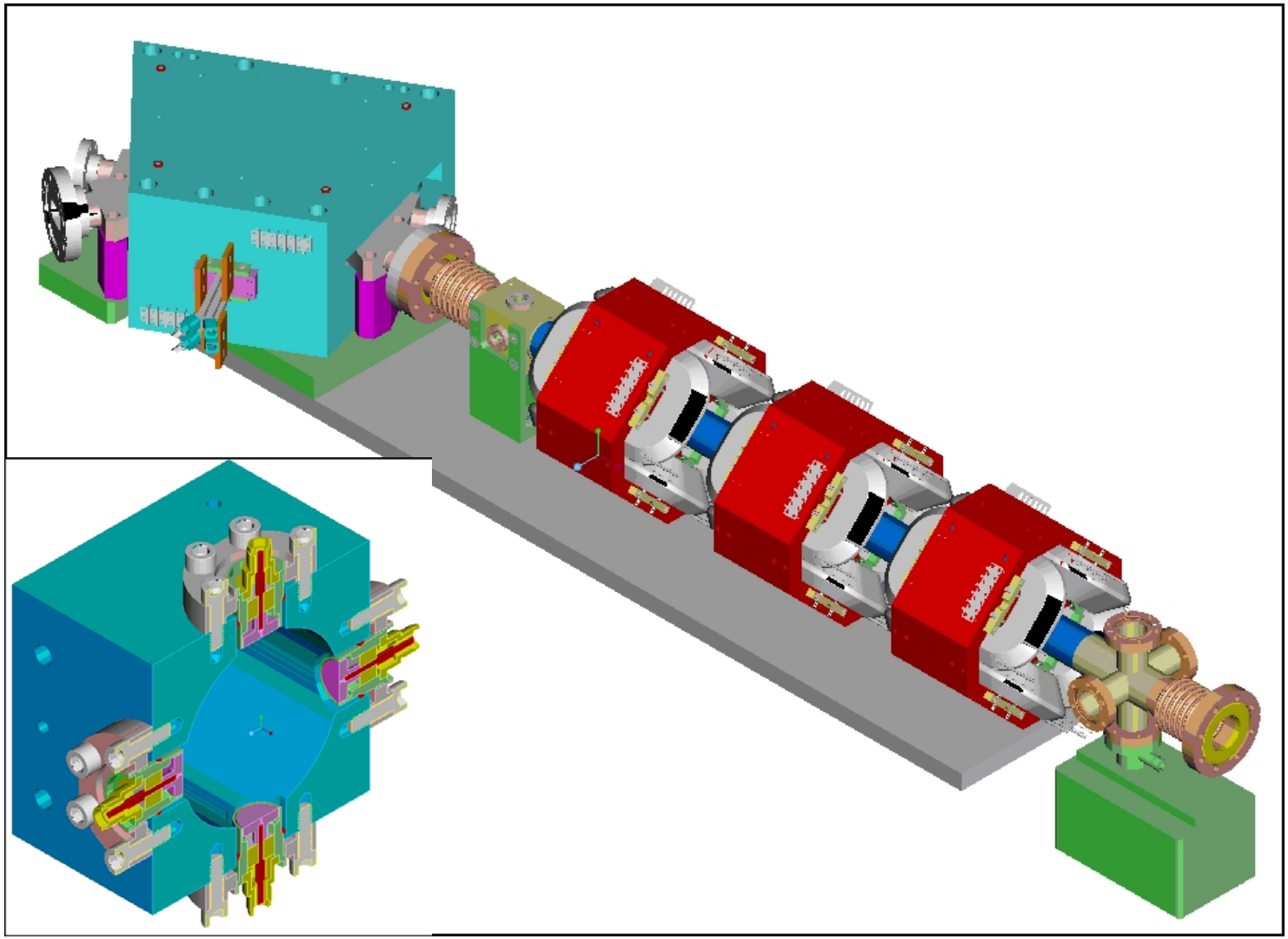

Laser system

Solicitation	**10/25/06**	
Source Selection:		
Quotes/Proposals Received	**11/17/06**	
Panel Conflict of Interest Certs	**11/30/06**	**to be received at panel meeting**
Panel Meeting Minutes	**11/30/06**	**to be taken at panel meetings**
Score Sheets	**11/30/06**	**to be taken at panel meetings**
Panel Evaluation Report	**12/8/06**	
Technical Evaluation	**12/8/06**	
Source Selection Official Statement	**12/11/06**	

Delivery: 180 days ARO

Acceptance & Testing: 90 days

Integration: 60 days

- Beam transport- vacuum mirror/holder
- Diagnostics-position, energy
- RF synchronization

Received response from one vendor, expecting from another

Deposition system and Transfer Cart

- AES (Navy SBIR):
  - Design for deposition system completed
  - Parts to be ordered in Feb/March 07
  - Transport cart to be designed
  - Parts to be ordered in 08
- BNL:
  - Re-establish cathode recipe
  - Integrate Transport cart

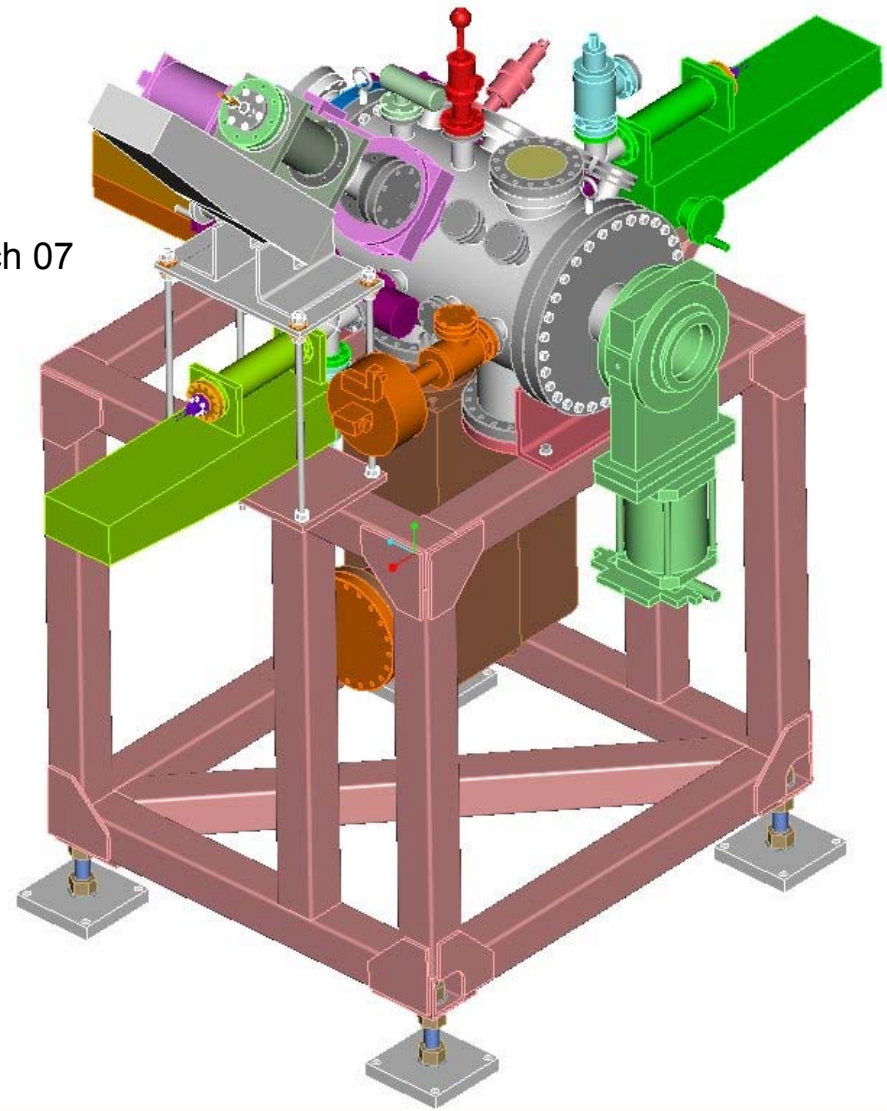

Transport System

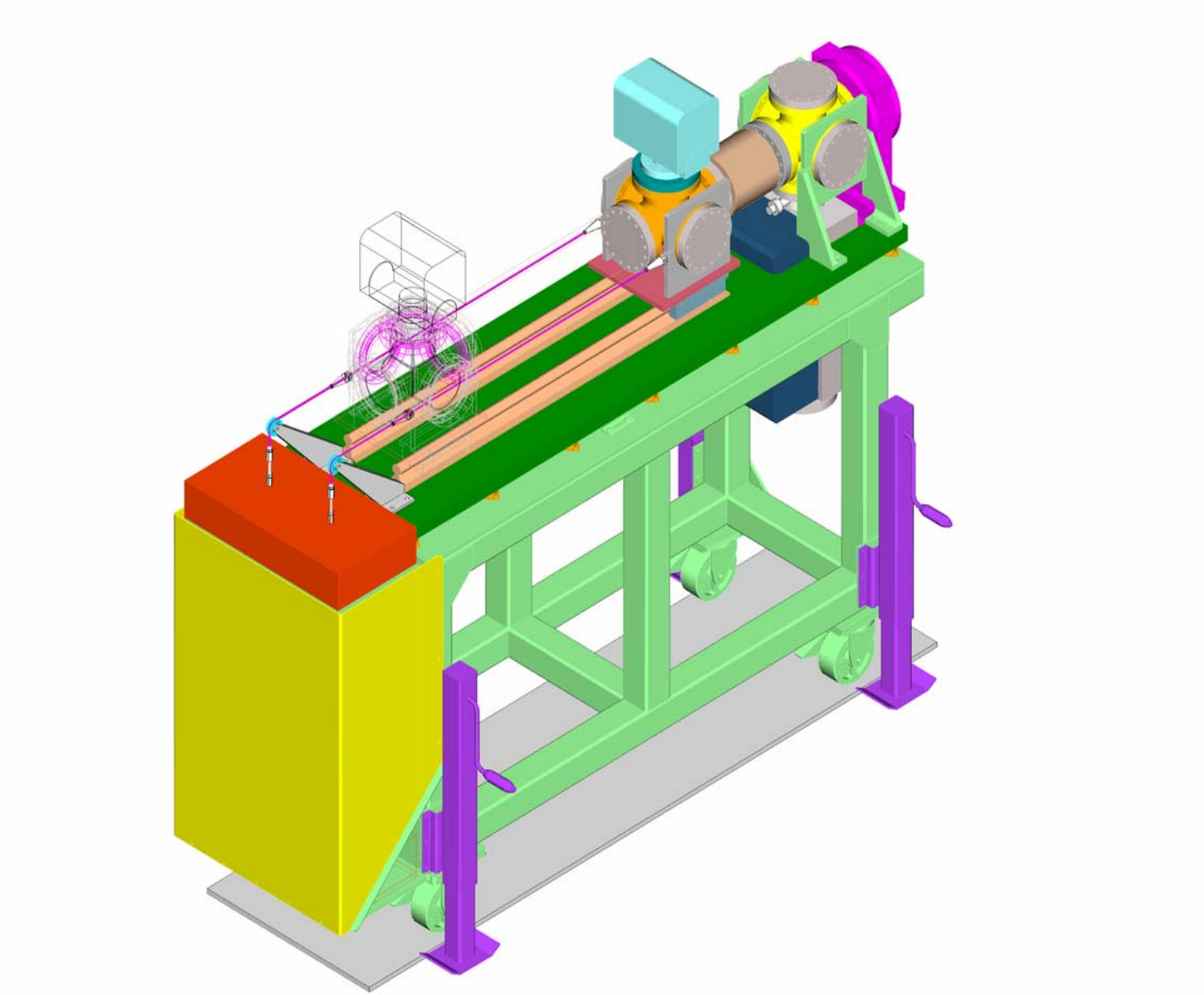

System Assembly

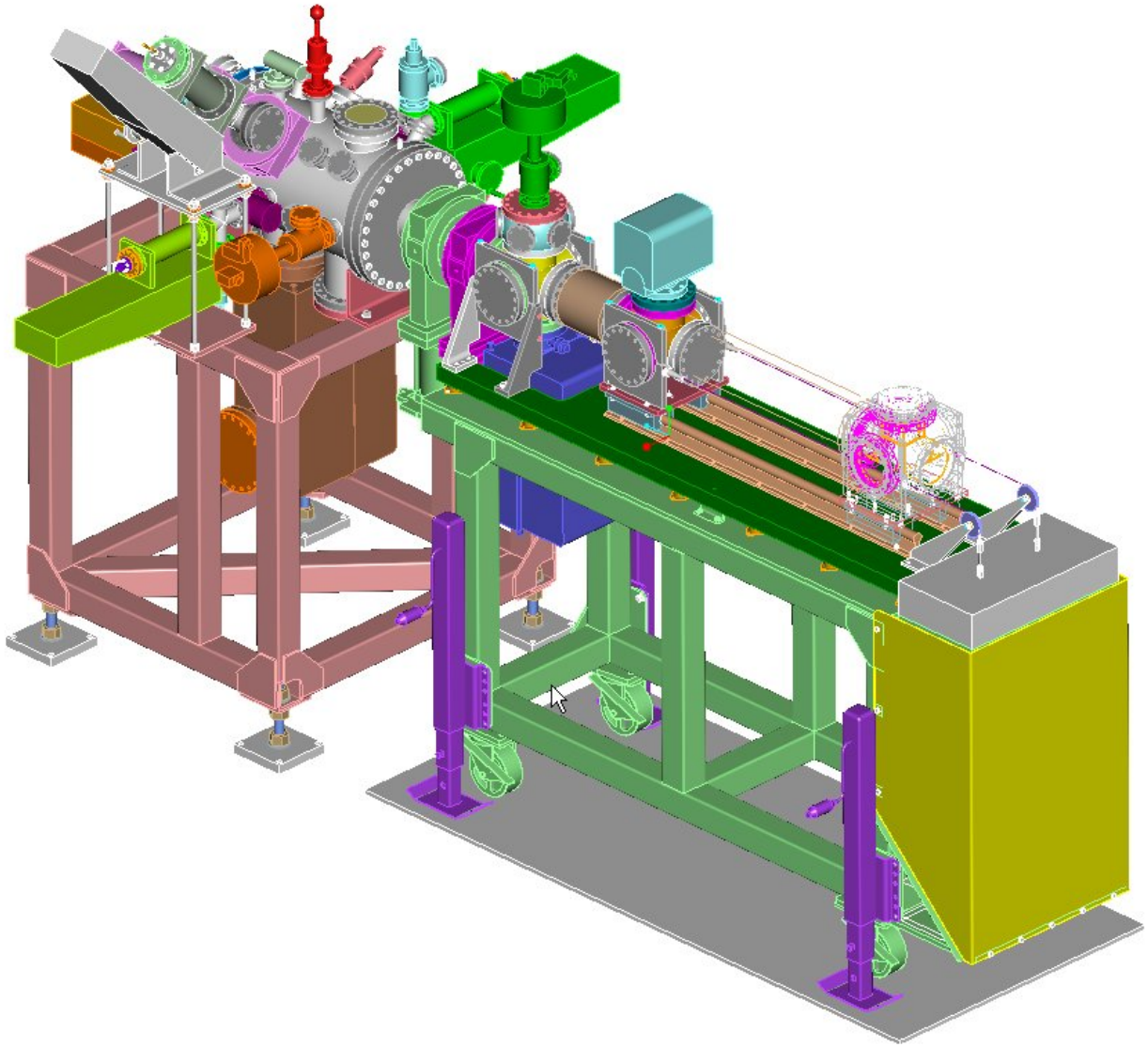

Transport System/Gun Assy.

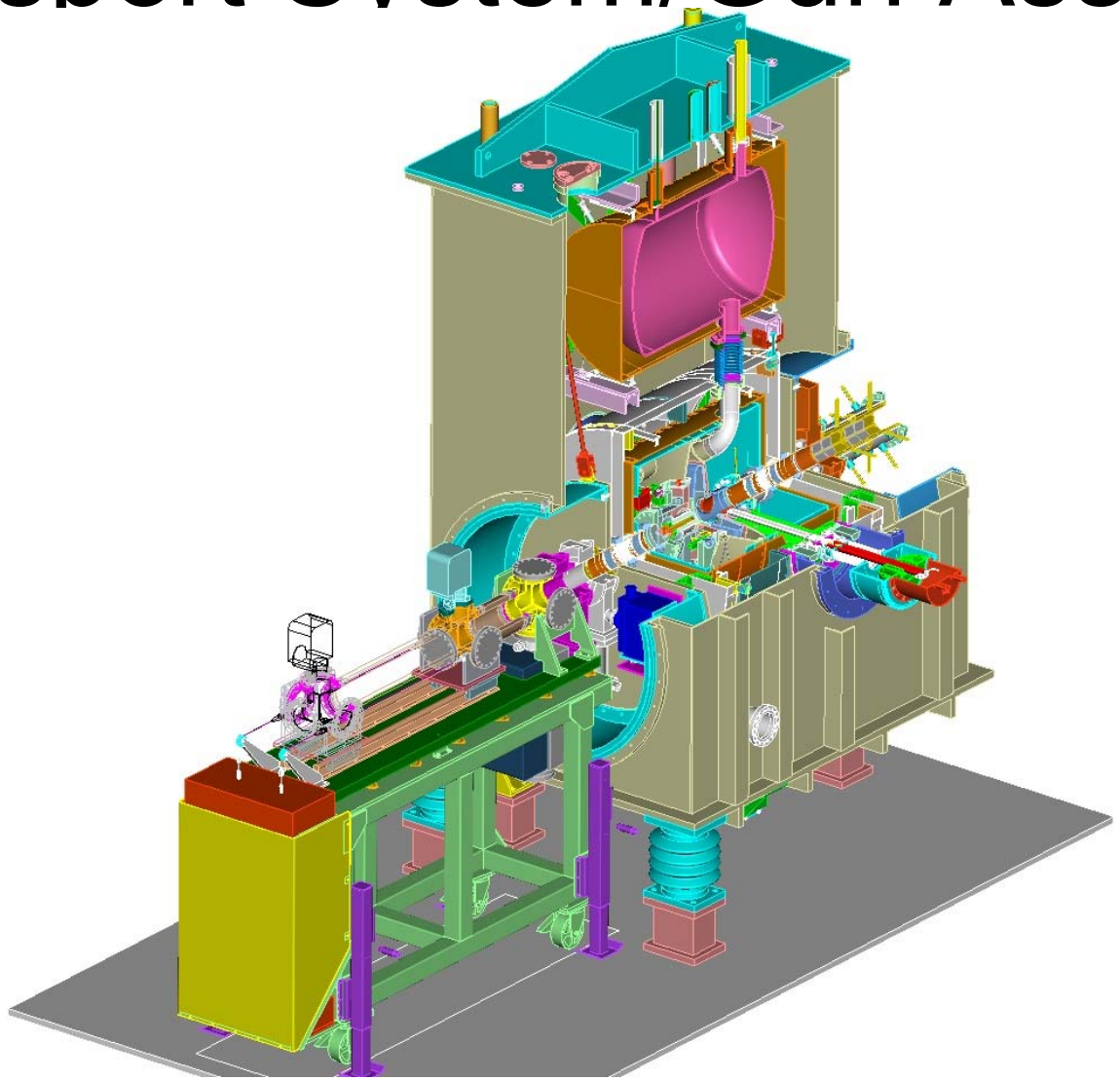

Transport System/Gun Assy.

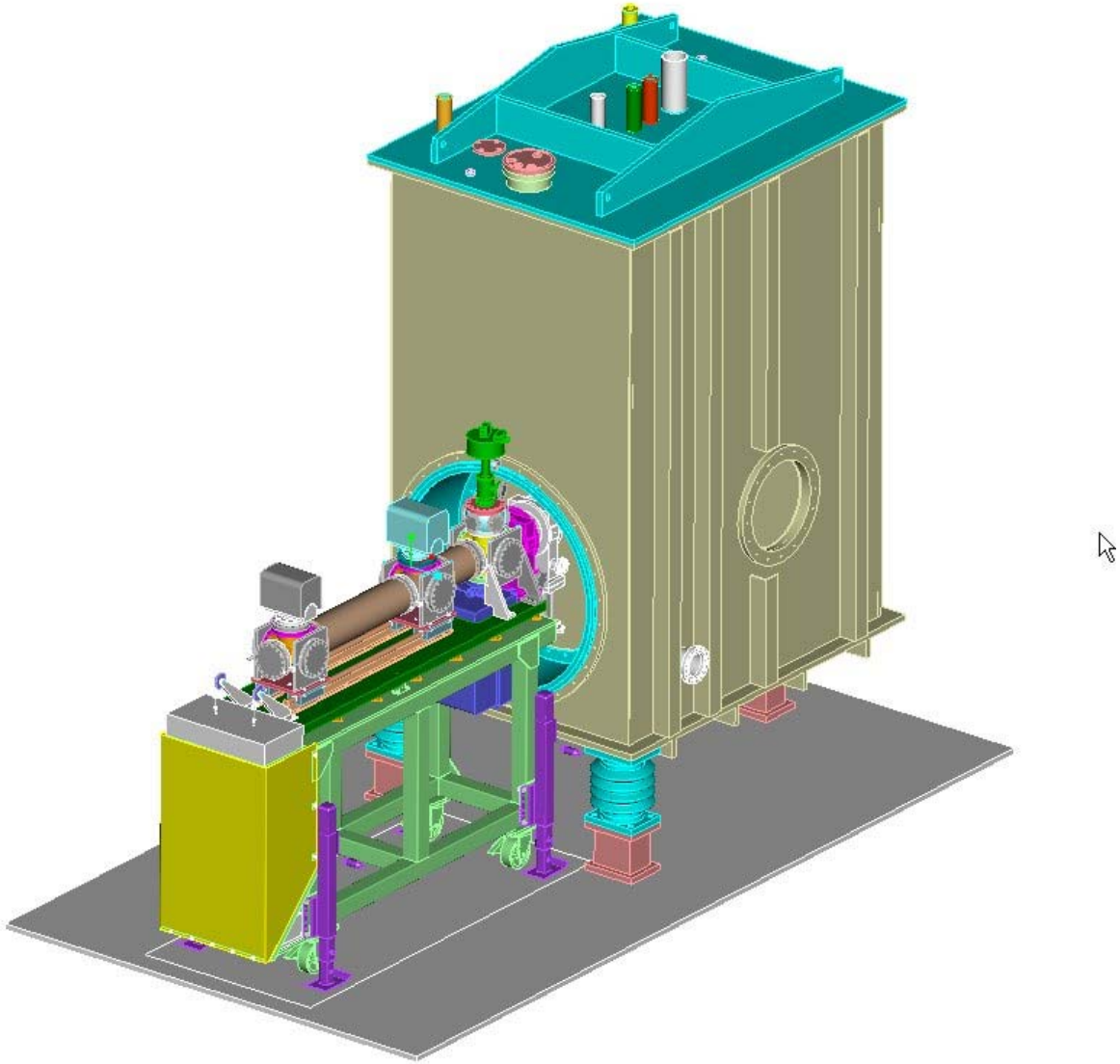

Diamond amplified photocathode

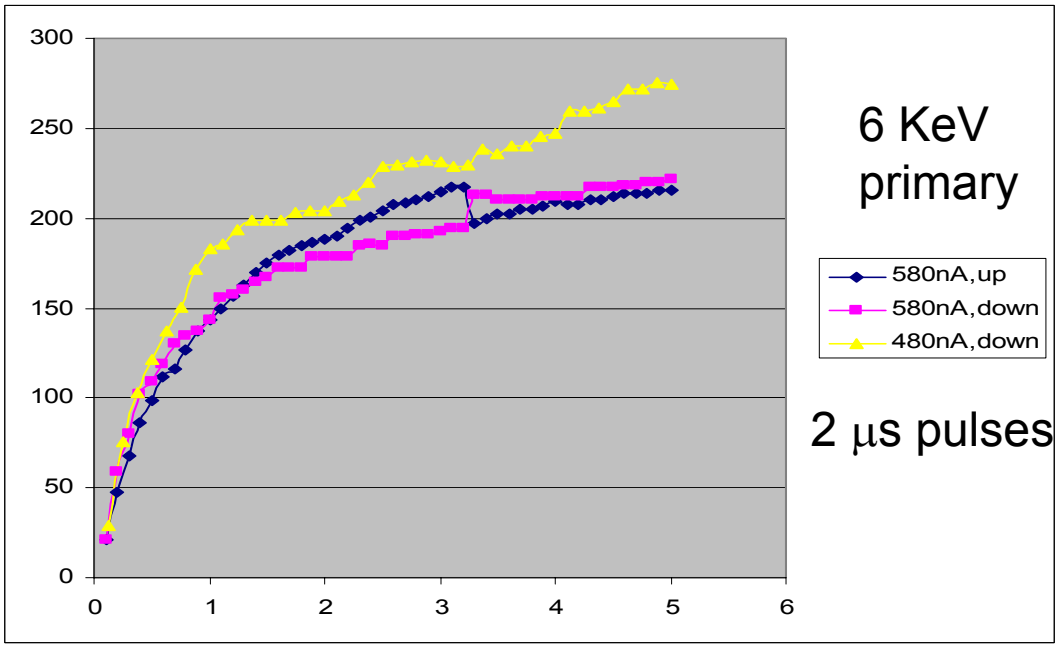

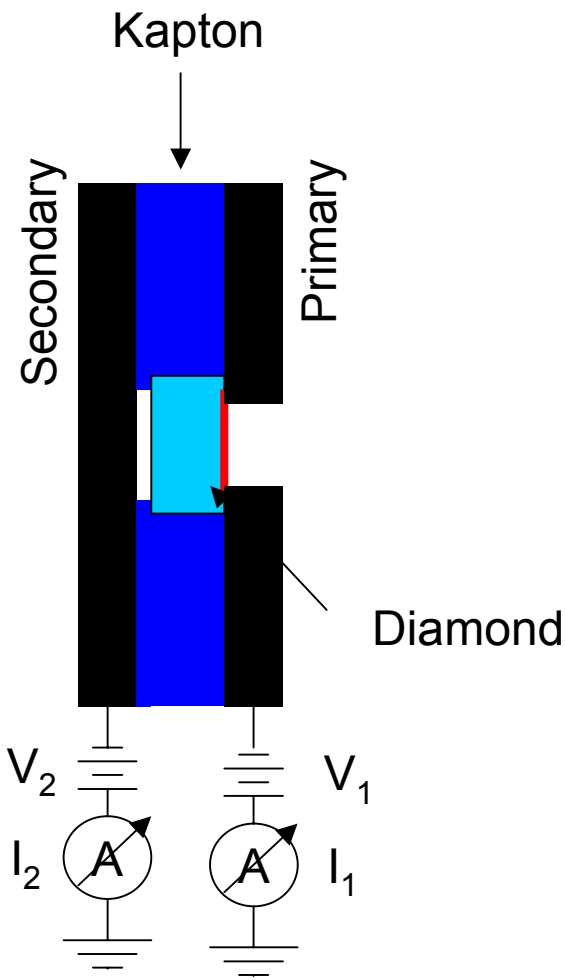

Good results in generation, transmission and emission of electrons from diamond. Preliminary: Curves fit theory.

Work on capsule production

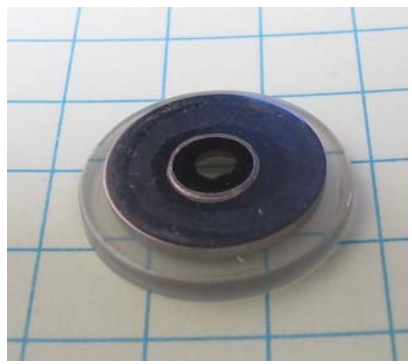

To be done:

- **Thermal emittance measurement**
- **Picosecond pulse measurement**
- **High total current measurement**
- **Production of thin windows**
- **Test of capsules**
- **Test in SRF gun**

Backup:
CsK_2Sb cathode

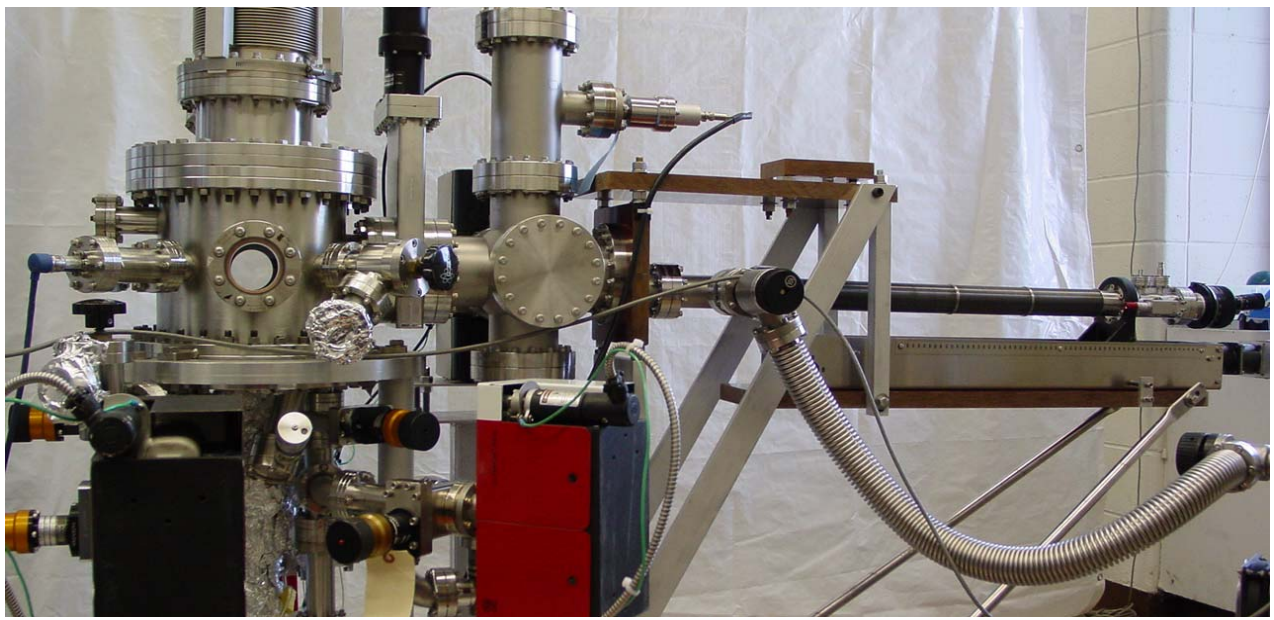

ERL LLRF SYSTEM PLANS & STATUS

- Current Plan: ERL 5-Cell Cavity and Gun will in the fullness of time be controlled by new digital controllers currently in design as part of the C-AD LLRF Upgrade.
  - All C-AD LLRF systems will be based upon a single new digital controller architecture:
    - Stand-alone rack-mount carrier, serving as an FEC and extremely flexible system host module, hosting up to six similarly extremely flexible PMC/XMC daughter modules providing all signal acquisition and processing functions.
  - Reason one might be concerned
    - THIS NEW HARDWARE DOES NOT YET EXIST. It is being designed now. It is based on technologies, hardware and development tools we have NEVER used before, and our plans are extremely aggressive.
  - Reason one might be less concerned
    - We recently completed preliminary testing of a prototype daughter module.
    - Purpose of this effort was to allow proof of principle testing of every technology we plan to employ, including:
      - PPC405 as an embedded FEC running the standard controls VxWorks kernel and drivers, 10/100 Ethernet, >3 Gbps serial comm links on Cu and fiber, PCI 32/33, 533 MHz 64bit DDR2 notebook SDRAM modules, SDR SDRAM, FLASH . . .
    - Testing of the prototype was 100% successful, and three prototype modules now serve as development platforms for the LLRF Upgrade effort.
    - Prototype modules routinely sit active on the controls network, as development FECs for the C-AD LLRF Upgrade.

ERL LLRF SYSTEM PLANS & STATUS

- Current Status: No hardware of any kind has yet been assembled for the 5-Cell testing, let alone the rest of the ERL LLRF.
  - C-AD LLRF Priorities are 1) machine operations (Run 7), 2) C-AD LLRF Upgrade progress, 3) everything else (including ERL).
  - Priority of preparations for 5-Cell testing (or anything else in Item 3) rises inversely with the time remaining to complete preparations.
  - Staged Plan for 5-Cell Testing
    - 1) Near Term (03/2006): Initial testing of 5-Cell will be done using an analog PLL and/or SEL type setup.
      - “Simple”, minimum effort, old school, gives us experience with cavity.
    - 2) Mid Term (07/2006): Transition control of 5-Cell to “existing” digital LLRF system based on BNL designed SNS Ring LLRF system.
      - Significant effort to reconstitute hardware, adapt 1 MHz ring system to 703 MHz SCRF system.
      - No real benefit to LLRF (actually just a time sink). Would provide relatively clean interface to an existing EPICS control system. Make pretty displays.
    - 3) Late Term: (11/2006): Transition control of 5-Cell to prototype LLRF Upgrade controller.
      - Prototype Carrier, RF ADC and DAC daughter modules, FPGA firmware, system drivers, application software, testing, debugging, implementing compliant passwords, etc.
      - Humongous effort. Anything else we do detracts from this effort, and delays it. Return on Delay is ~2:1 (every week delay up front costs two weeks to completion).

ERL LLRF SYSTEM PLANS & STATUS

- ERL Gun Integration: Once the 5-Cell is transitioned to the LLRF Upgrade hardware, the remainder of ERL LLRF sub-system control comes easier.
  - Identical controller for the gun.
    - This is the major goal of the C-AD LLRF Upgrade. Provide a common hardware platform for control of *any* LLRF system, and make it system specific via firmware and software.
  - Most effort would be in accommodating any difference in control algorithms and system firmware.
    - Software and firmware (code) development are not simple. But, code is MUCH easier to revise than is hardware. This is why we like programmable things.
- Energy Feedback, Other Stuff: Same answer as the Gun.
  - Either add another controller if needed, or just implement desired new functionality in the cavity controller, gun controller, or both.

Cryogenics: System 1- Batch System with portable dewars

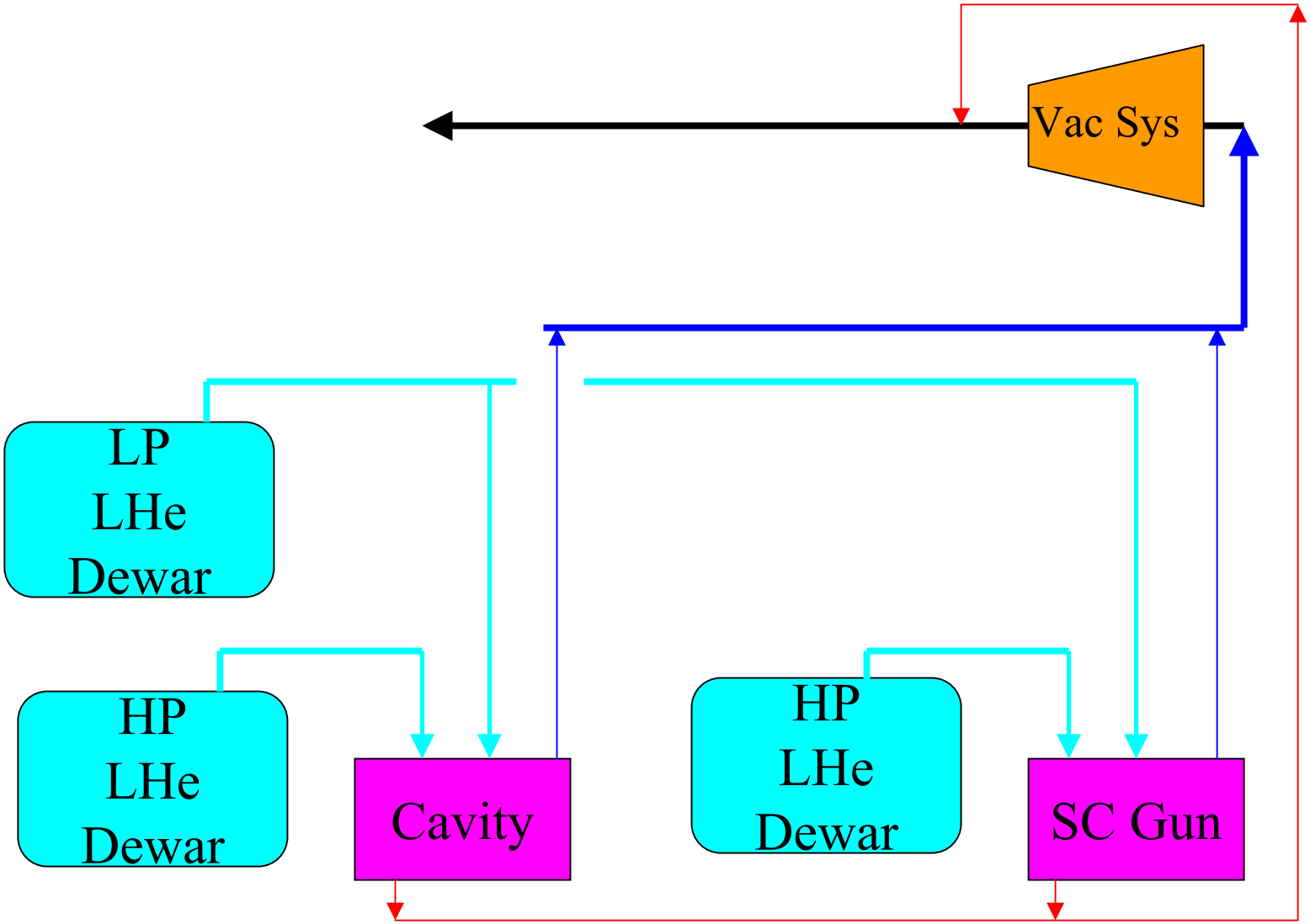

2K Operations with Batch System

- <u>5 Cell Cavity and 700 MHz SRF Gun</u>
  - –Cooled down and filled from a local helium dewar
    - •500 Liter Supply dewar located outside of Block house
    - •When cavity and/or gun are filled, close supply valve, pump down to 2K via vacuum pump
    - •2 K Operations while Helium remaining after pump down boils off
    - •Est. 2.5-3 hrs of 2 K operations with built in Helium reservoir on top of cavity and gun
    - •Pressurized 250 Liter dewar located adjacent to cavity or gun to provide 5K cooling to power coupler, end flanges
    - •Cold gas routed through vaporizer before reaching vacuum pump
    - •LN2 heat shield fed from buggy adjacent to the block house

- <u>1.3 GHz RF Gun</u>
  - Same operating concept except 500 liter fill dewar will be local to RF gun inside block house
  - Does not have associated pressurized Helium dewar
  - Does not have LN2 heat shield

Until the refrigerator is in place only one component will be operating cold at any given time

Work remaining for batch system:

- Parallel plate relief valve system for cavity.

- Piping installation

Cryogenics: SYSTEM 2 - Liquefier

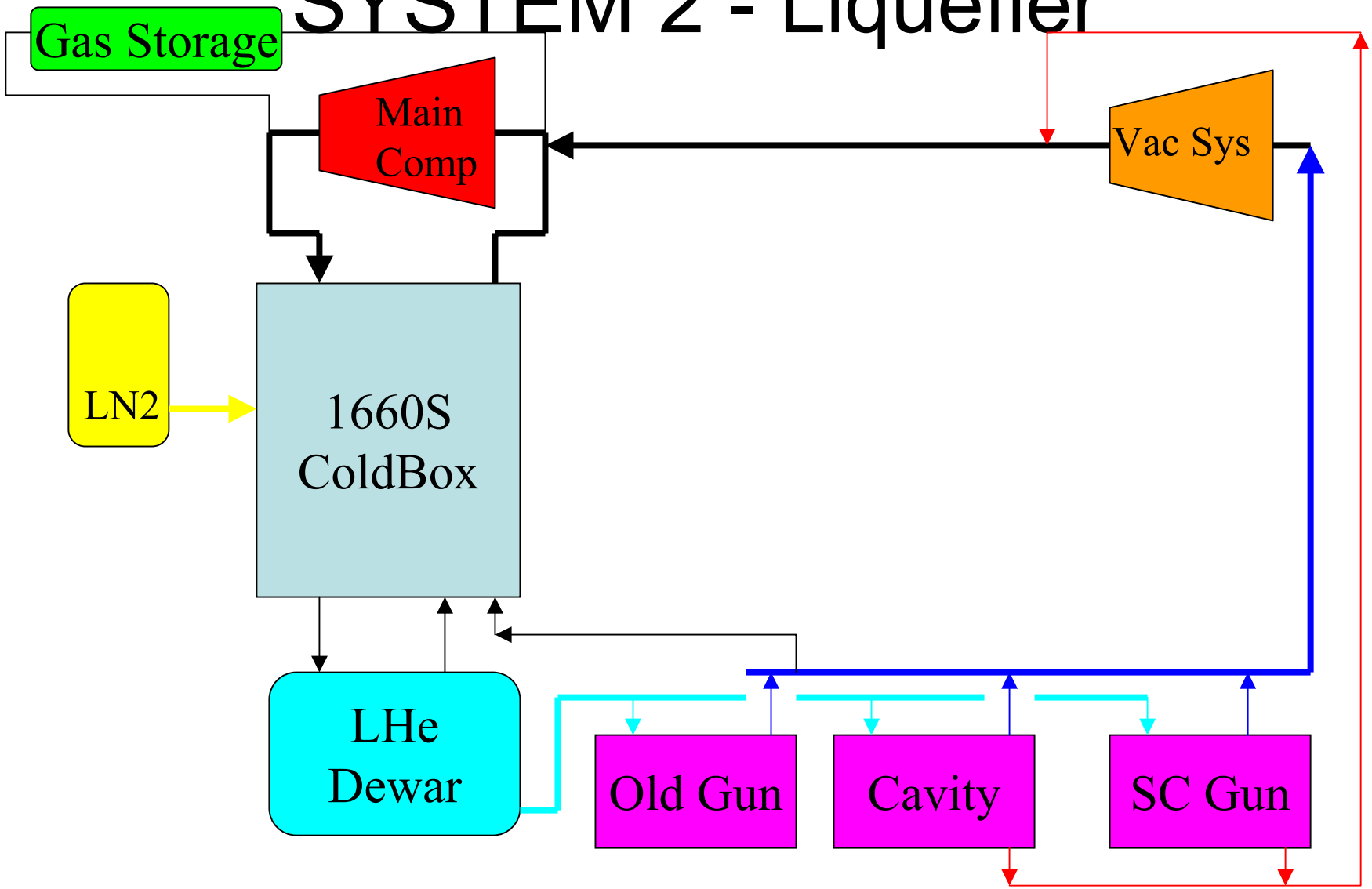

System 2 components:

Main compressor -	Old G-2 compressor
	Sullair C20LA4.8 400HP ~ 45 g/s
	Will be tested soon
Gas storage tank -	Existing on site. Will have to be relocated
LN2 Dewar -	Existing on site. Will have to be relocated
Lhe Dewar -	Existing on site. Will have to be sent out to be modified.
1660S coldbox-	Being sent out to be refurbished. Expected back in June 07

New Vacuum jacketed xfer lines

New oil removal system

System 2 (continued):

- Provide 6 to 8 hours of continuous operation of cavity and gun

- Could be operational by March 08

SYSTEM 3: Liquefier + Recovery

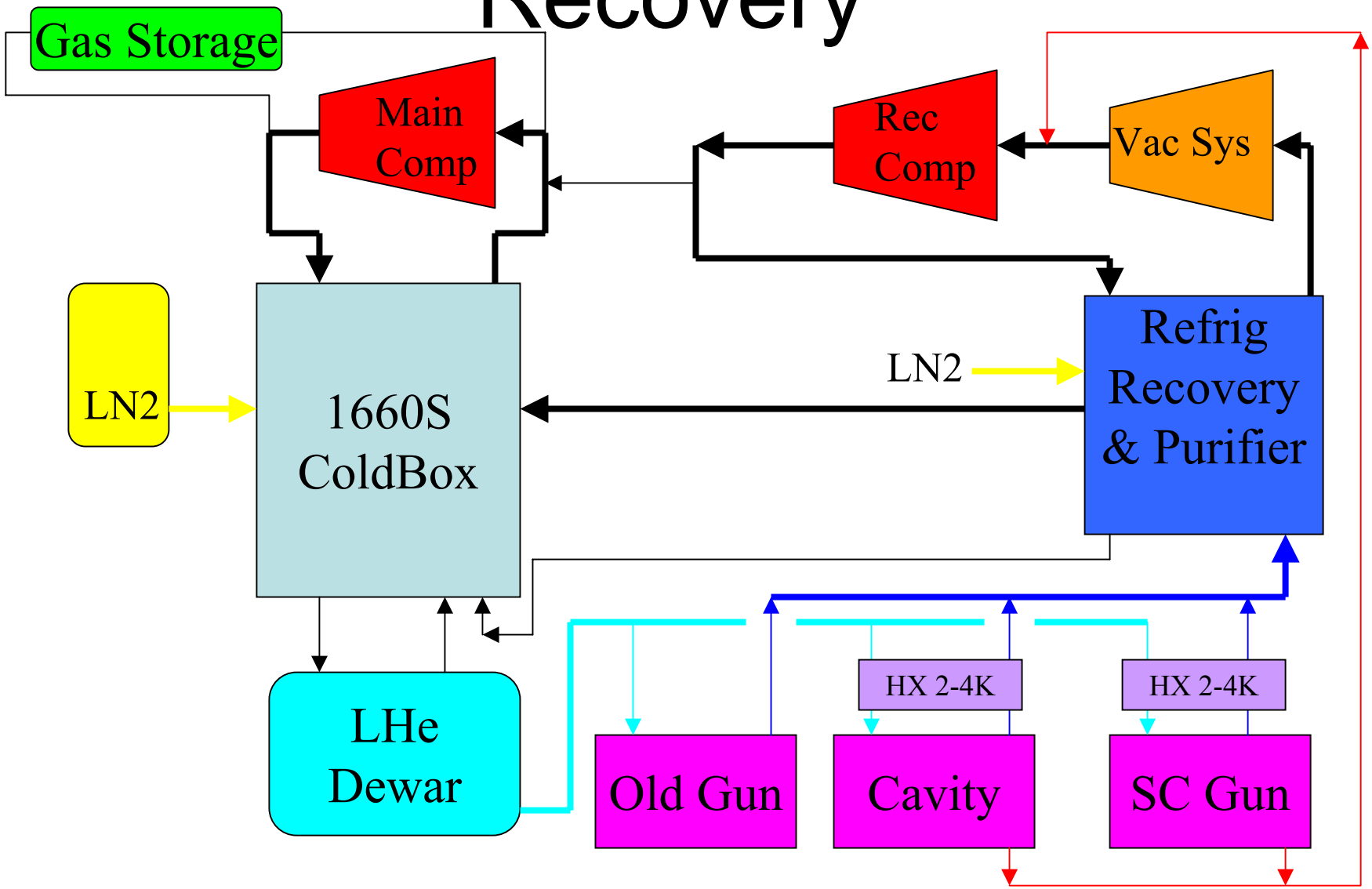

System 3:

- Allows for continuous operation

- Could be operational 18 months after approval

- Requires: Recovery compressor
  Refrigeration Recovery HX + Purifier
  2K-to-4K heat exchangers
  Vacuum jacketed xfer lines

Vacuum Skid

Used for all 3 systems. Operational testing is underway.

500 Gallon Dewar (ASME U stamp)

To be sent out to be modified for System 1

1660S Plant (100-120 LPH)

(Being shipped to Linde for refurbishment)

G-2, 400 HP Sullair C20LA4.8

Testing to be done soon

AIR

ID	Task Name	Duration	Start	Finish
1	**e-CX / ERL Project**	**1479 days**	**Mon 2/3/03**	**Mon 12/29/08**
2	Project Start	0 days	Mon 2/3/03	Mon 2/3/03
3	**Develop & Procure the SC 5-cell RF cavity**	**822 days**	**Mon 2/3/03**	**Mon 5/8/06**
60	**5-Cell Cavity Preparation & String Assembly**	**988 days**	**Mon 2/3/03**	**Tue 1/9/07**
153	**Cavity BCP Cleaning**	**236 days**	**Mon 1/30/06**	**Tue 1/9/07**
253	**Cavity Mechanical Installation**	**902 days**	**Thu 9/4/03**	**Mon 4/16/07**
326	**Assemble SRf Cavity & Associated Components**	**160 days**	**Thu 9/7/06**	**Mon 4/30/07**
334				
335	**Gun-to-Dump Test**	**1479 days**	**Mon 2/3/03**	**Mon 12/29/08**
336	**Gun-to-Dump Test Planning**	**35 days**	**Fri 2/10/06**	**Fri 3/31/06**
340	**SC Electron Gun Procurement**	**381 days**	**Fri 12/1/06**	**Wed 6/11/08**
362	**Procure & Install e-Gun RF System**	**841 days**	**Mon 1/5/04**	**Fri 5/11/07**
395				
396	**Photocathode System Development & Procurement**	**1344 days**	**Mon 2/3/03**	**Wed 6/11/08**
415	**Gun to Dump Photocathode / Laser Controls**	**240 days**	**Tue 2/6/07**	**Wed 1/23/08**
418	**Assemble & Test of Rf Gun & Associated Systems**	**350 days**	**Mon 4/2/07**	**Fri 8/22/08**
424	**GtD Test Magnets, Power Supplies & Stands**	**575 days**	**Mon 4/3/06**	**Tue 7/22/08**
451	**Design & Procurement of RF Gun to Dump Vacuum System**	**327 days**	**Thu 10/5/06**	**Thu 1/31/08**
461	**GtD Test Beam Instrumentation System**	**406 days**	**Thu 8/24/06**	**Fri 4/11/08**
467	**Beam Dump Procurement**	**846 days**	**Mon 11/1/04**	**Wed 3/26/08**
478	**Gun-to-Cavity-to-Dump Controls**	**858 days**	**Thu 5/12/05**	**Mon 10/20/08**
523	**Gun to Dump Test Systems Integration & Final Assembly**	**132 days**	**Fri 3/14/08**	**Mon 9/22/08**
534	Gun-to-Dump Testing	5 days	Tue 9/16/08	Mon 9/22/08
535				
536	**Dev., Design & Procurement of ERL Magnets, PSs, Controls & Vacuum System**	**1450 days**	**Mon 2/3/03**	**Wed 11/12/08**
632	**ERL Installation / Integration, All Systems**	**365 days**	**Thu 7/12/07**	**Mon 12/29/08**
660	Receive approval to run	0 days	Thu 12/11/08	Thu 12/11/08
661	System Run & Testing Begins	0 days	Mon 12/29/08	Mon 12/29/08
662	Project Complete	0 days	Mon 12/29/08	Mon 12/29/08

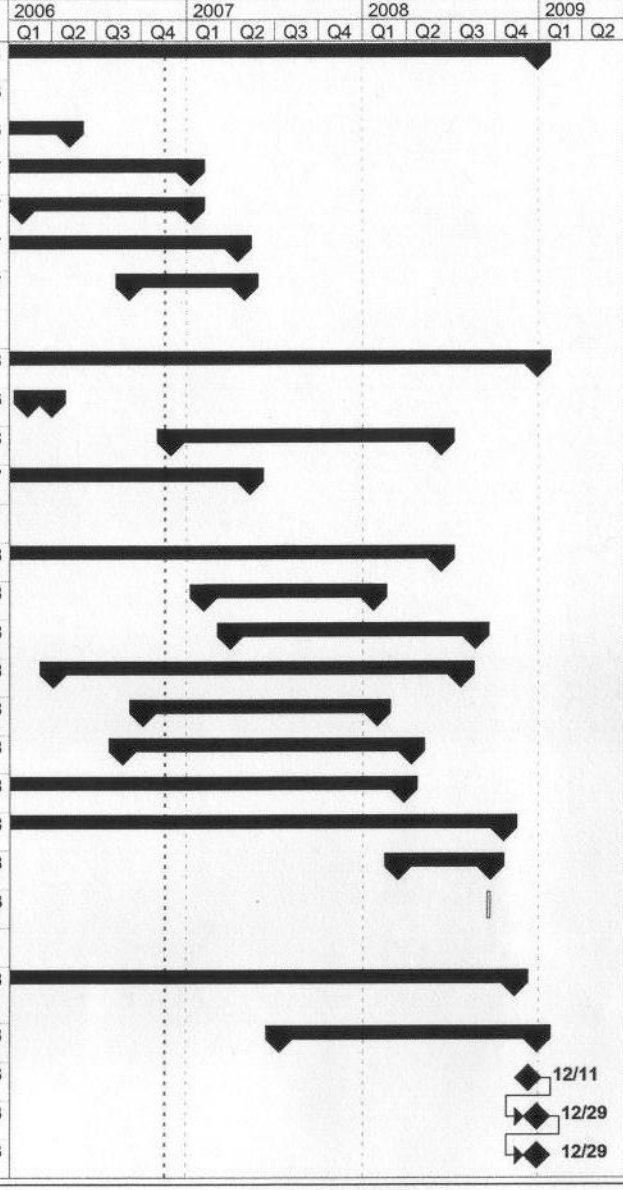

Prjt:SCRFoverallFY07 Adjustment 111606 to I BZ
Date: Thu 11/16/06, 5:37 PM

Task		Rolled Up Task		External Tasks	
Critical Task		Rolled Up Critical Task		Project Summary	
Progress		Rolled Up Milestone		Group By Summary	
Milestone		Rolled Up Progress		Deadline	
Summary		Split			