RHIC/RF-20

RHIC Project

BROOKHAVEN NATIONAL LABORATORY

RHIC/RF Technical Note No. 20

LOOP COUPLING ANALYSIS

J. Rose
C. Quiery

July 1994

INTRODUCTION

A method for calculating the coupling coefficient, β, of a loop is presented. The effective damping achieved by this loop when terminated in an arbitrary impedance is also calculated. The analysis is compared with measurements in the laboratory and found to be in agreement. The methods demonstrated are not original and can be found in texts and papers dating back fifty or more years[1,2,3,4], but are not widely known. They are documented here for ease of reference in the mode damping work currently being pursued by the rf group.

Calculation of β

The coupling parameter, β, measures the efficiency with which the energy stored in the cavity couples to the external load and is dissipated there. This measurement is important in finding a loop size that most efficiently couples to the cavity. β is the ratio of the externally dissipated power to that of the internally dissipated power. In the case where the system is probe coupled, the cavity is seen as a series tuned circuit and β is equivalent to Z_0/R_L, where Z_0 represents the input impedance (i.e. R_{gen}) and R_L is the output impedance. However, in our case where the system is loop coupled, the cavity is seen as a shunt tuned circuit and β is defined as R_L/Z_0. β is categorized in one of three ways. The system is either undercoupled ($\beta < 1$), critically coupled ($\beta = 1$), or overcoupled ($\beta > 1$). For the purposes of driving a cavity with a generator one usually wants to minimize the power required from the generator. The maximum power transfer from a generator to a load is achieved when the system is critically coupled (i.e. $Z_{gen}=Z_{load}$ or $\beta = 1$) . This will insure maximum transfer of power from the cavity. Therefore, in the following equation, it can be seen that maximum power transfer occurs when the unloaded Q (Q_0) is twice that of loaded Q (Q_L):

$$Q_0 = Q_L(1+\beta) \tag{1}$$

Calculation of Induced Voltage

The induced voltage of a loop in a time varying magnetic field can be calculated using the following analysis:

When the magnetic flux linking a loop changes, a current is induced on the loop. The relationship between the induced electric field and the rate of change of the magnetic field is:

$$\nabla x E = -\frac{\partial B}{\partial t} \tag{2}$$

Taking the surface integral of both sides over a loop and applying Stokes Theorem:

$$\int_S (\nabla x A) \cdot ds = \int_c (A \cdot dl) \tag{3}$$

we obtain:

$$\int_S (\nabla x E) \cdot ds = \int E \cdot dl = -\int_S \frac{\partial B}{\partial t} ds \tag{4}$$

Since the loop is situated in a time varying magnetic field:

$$B = B_0 e^{j\omega t} \tag{5}$$

and the rate of change of the magnetic field with respect to time is:

$$\frac{\partial B}{\partial t} = j\omega B_0 e^{j\omega t} \tag{6}$$

The right side of (4) becomes:

$$-j\omega B_0 S e^{j\omega t} \tag{7}$$

where S = Surface area of the loop.

Equation (4) now becomes:

$$\int E \cdot dl = -j\omega B_0 S e^{j\omega t} \tag{8}$$

where

$$B_0 = \mu H \tag{9}$$

This states that a time-rate of change of magnetic flux induces an electric field. The negative sign shows that the induced emf will cause a current to flow in the closed loop in such a direction as to oppose the change in the linking magnetic flux. To find the magnetic field in an arbitrary cavity geometry, electromagnetic field solvers such as SUPERFISH, MAFIA, or URMEL are used.

To exemplify how this method can be utilized, the coupling ratio for a loop in the 26.7 MHz accelerating cavity was calculated. A loop with a surface area of 7.13×10^{-3} m^2 was placed in port 16 shown in the cavity diagram in Figure 1. At this location in the cavity, one could find from URMEL's output file, that the average azimuthal magnetic field intensity ($H\phi$) is 6.9 A/m. Normalizing the magnetic field from URMEL (in this case 1 kv gap) to that of the 400kv gap, this quantity is multiplied by 400 to become 2760 A/m which in turn gives us $B = 3.47 \times 10^{-3}$ Tesla. The induced emf on the loop can now be found by using equation (8), suppressing

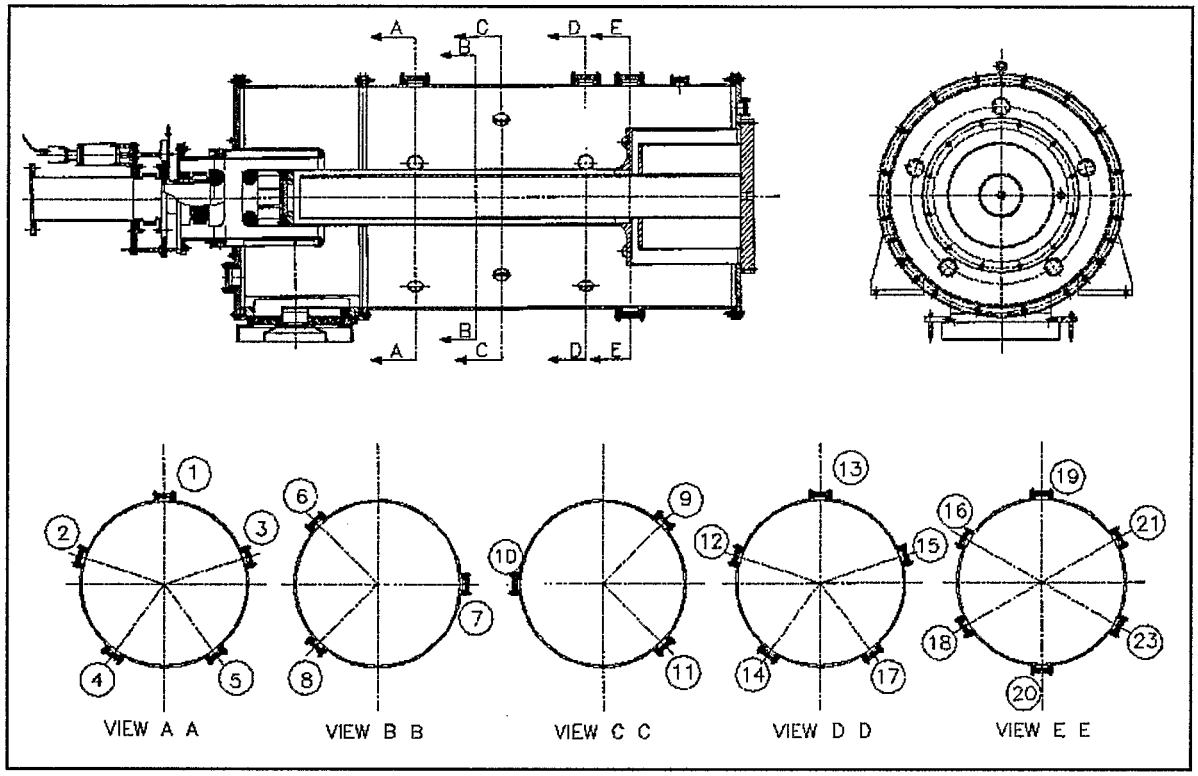

Figure 1 Location of Port Holes on Cavity

the time dependence $e^{j\omega t}$:

$$\int E \cdot dl = (3.47x10^{-}3Tesla)(2\pi * 26.17MHz)(7.13x10^{-}3m^2) \tag{10}$$

Hence, the induced emf on a loop with a surface area of 7.13 x 10^{-3} m^2 placed at 1.71 meters from the front of the cavity, turns out to be 4069 V, which gives a gap to loop coupling of:

$$20\log\frac{4069V}{400kV} = -39.85dB \tag{11}$$

Direct Measurement

The emf induced in a stationary loop caused by a time varying magnetic field is a transformer emf that transforms voltages, currents, and impedances. The setup used in our measurements can be represented by the circuit in Figure 2, where the right side of the circuit represents the cavity and the left is the loop that will be inserted.

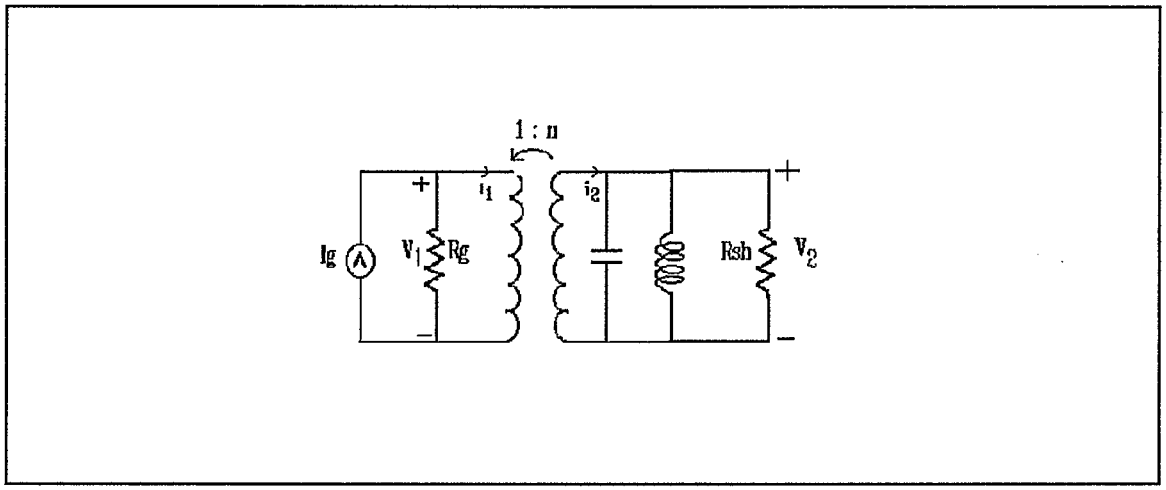

Figure 2 : Transformer Circuit Equivalent of Laboratory Setup

For our transformer, the ratio of the currents in the windings is equal to the inverse ratio of the number of turns, and the ratio of voltages is equal to the number of turns:

$$i_1 = ni_2, V_1 = \frac{V_2}{n} \tag{12}$$

Thus the coupled impedance at the reference plane of the loop is the shunt impedance divided by the effective turns ratio squared:

$$R_{eff} = \frac{V_1}{i_1} = \frac{\frac{1}{n}V_2}{ni_2} = \frac{R_{sh}}{n^2} \tag{13}$$

The circuit in Figure 2 is transformed to that of Figure 3.

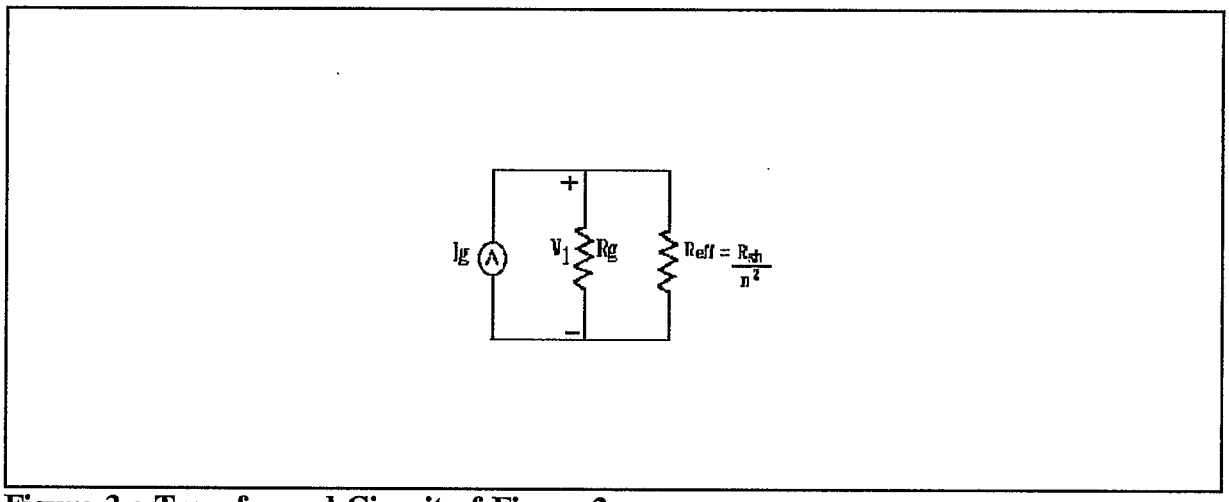

Figure 3 : Transformed Circuit of Figure 2

Substituting the fundamental shunt impedance of the 26 MHz PoP cavity (0.93 MΩ), found by SUPERFISH, the equation becomes:

$$R_{eff} = \frac{0.93x10^6}{n^2} \tag{14}$$

With this equation, we were able to calculate the coupling ratio of the same loop by measuring its impedance on a network analyzer. For the loop, with a surface area of 7.13×10^{-3} m^2 placed in port 16 of the cavity, the effective impedance transformed to the plane of the loop was found to be 59.23Ω. Plugging this into the above equation, one finds n = 125. Therefore, the coupling ratio is:

$$20\log(\frac{1}{125}) = -41.9dB \tag{15}$$

The purpose of the of this generator-driven circuit is to obtain maximum power transfer. Maximum power is delivered by the source when R_{sh}/n^2 is equal to the internal resistance, R_g, of the generator, which for our power tetrode is 1500 Ω.

Effective Damping

The higher order modes (HOM's) present in the cavity will cause beam instabilities if not suppressed adequately. The goal of HOM damping is to attenuate the higher order modes without affecting the shunt impedance at the resonant frequency. Due to their large growth rates, we are currently most concerned with damping the first two HOM's of 103 and 192 MHz. In order to damp (de-Q) higher order modes we wish to overcouple a terminating impedance, typically 50Ω, to the cavity with very little power absorption at the resonant frequency. In order to reject the fundamental (26 MHz) power, a notch filter must be placed in series with the termination. As an example, we will use the first HOM impedance of 130 kΩ. The circuit is shown in Figure 4.

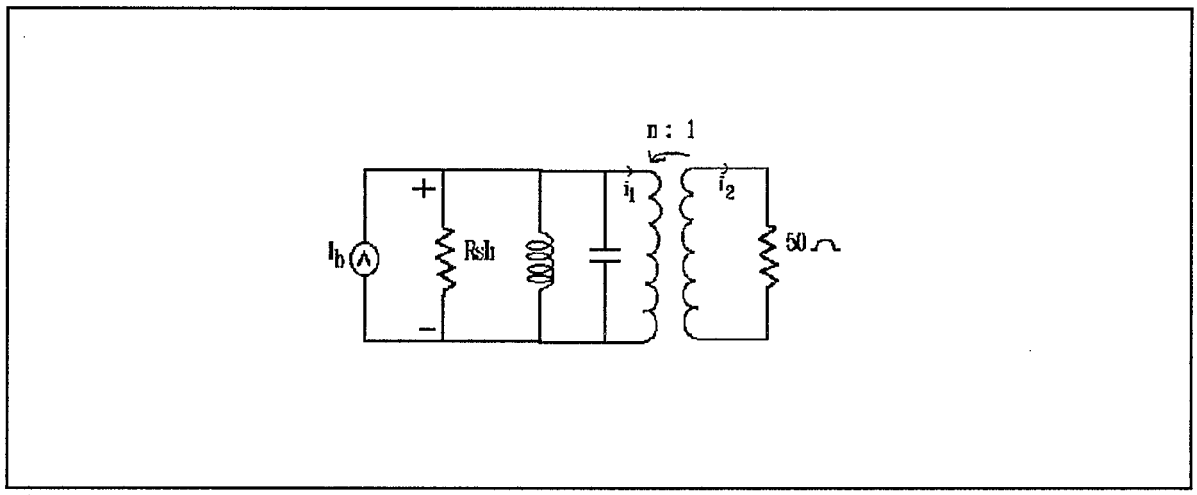

Figure 4: Effective Damping Circuit

If the coupling is chosen such that the effective parallel resistance in the reference plane of the cavity is much less than the shunt impedance ($R_{eff} << R_{sh}$), then the total impedance is essentially that of R_{eff} and the mode is effectively damped. When the 50 ohms is transformed into the cavity at the first HOM frequency of 103 MHz, the reactances cancel and the equivalent circuit becomes that of Figure 5.

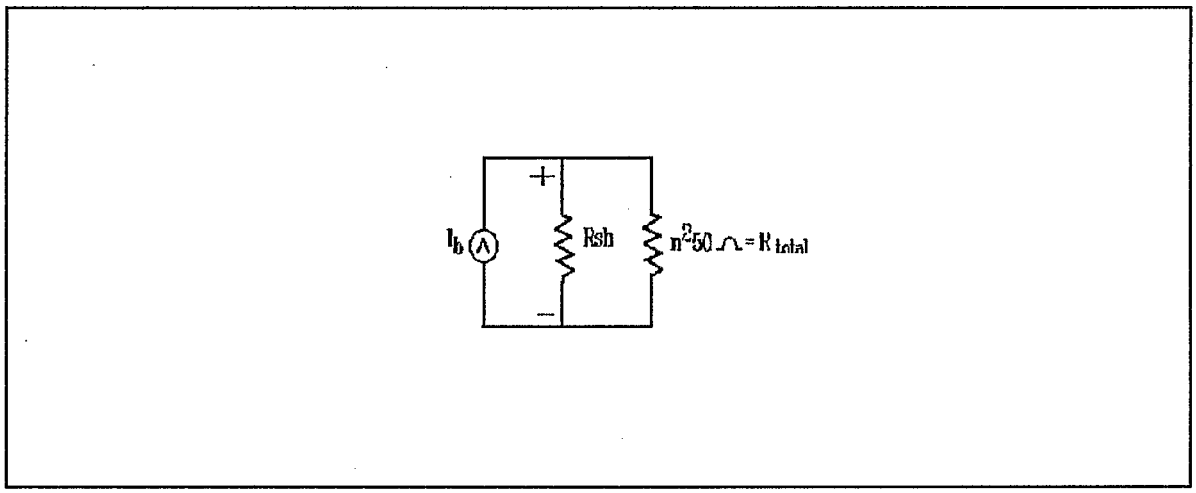

Figure 5 : Damping Circuit of Figure 4

The parallel resistance of the circuit in Figure 5 is equivalent to:

$$R_{total} = \frac{R_{sh}50n^2}{R_{sh}+50n^2} = \frac{(130k\Omega)50n^2}{130k\Omega+50n^2} \tag{16}$$

Unlike the circuit in Figure 2, this circuit is driven by a beam current. In order to damp higher order modes, one would want to minimize the voltage induced on the cavity by maximizing the coupling. In order for this to occur, n must be a minimum since the voltage induced on the cavity is equal to R_{total} multiplied by I_b. For example, to achieve a damping

factor greater than 10, n must be less than 17. This corresponds to a β of 9.

Conclusion

Our analysis of the above mentioned loop, using URMEL and Maxwell's equations, resulted in a coupling ratio of -39.85 dB. In the laboratory, when measuring the effective load seen by the loop and plugging it into the transformer equations, we came up with a result of -41.9 dB. This is a difference of only 4.9% and proves to be a sufficiently accurate method which will be used in our future analysis of higher order mode damping.

References

1. Loraine and Carson, "Electromagnetic Field and Waves", 1964.

2. Montgomery, Dicke, Purcell, "Principles of Microwave Electronics", 1946.

3. Terman, "Radio Engineers Handbook", 1943.

4. S.C. Slater, Microwave Electronics, 1950.