to be published in the Proceedings of the 1996 Beam Instrumentation Workshop at Argonne National Laboratory

RHIC/AP/101
June 1996

Squids, Snakes, and Polarimeters: A New Technique for Measuring the Magnetic Moments of Polarized Beams

P.R. Cameron, A.U. Luccio, T.J. Shea, and N. Tsoupas
Brookhaven National Laboratory, Upton, NY 11973 USA

D. A. Goldberg
Lawrence Berkeley Laboratory, Berkeley, CA USA

Abstract

Effective polarimetry at high energies in hadron and lepton synchrotrons has been a long standing and difficult problem. In synchrotrons with polarized beams it is possible to cause the direction of the polarization vector of a given bunch to alternate at a frequency which is some subharmonic of the rotation frequency. This can result in the presence of lines in the beam spectrum which are due only to the magnetic moment of the beam, and which are well removed from the various lines due to the charge of the beam. The magnitude of these lines can be calculated from first principles. They are many orders of magnitude weaker than the Schottky signals. Measurement of the magnitude of one of these lines would be an absolute measurement of beam polarization. For measuring magnetic field, the Superconducting Quantum Interference Device, or squid, is about five orders of magnitude more sensitive than any other transducer. Using a squid, such a measurement might be accomplished with the proper combination of shielding, pickup loop design, and filtering. The resulting instrument would be fast, non-destructive, and comparatively cheap. In addition, techniques developed in the creation of such an instrument could be used to measure the Schottky spectrum in unprecedented detail. We present specifics of a polarimeter design for RHIC, and briefly discuss the possibility of using this technique to measure polarization at high energy electron machines like LEP and HERA.

INTRODUCTION

The idea of making a direct magnetic measurement of beam polarization has been under consideration for many years. (1,2,3) Given the sensitivity of the squid, the amount of magnetic flux present due to the aligned dipole moments in the polarized beam in RHIC is sufficient to permit a quick and accurate measurement of beam polarization. In the case of charged particle beams, these magnetic dipoles are inextricably bound to electric monopoles, whose current generates magnetic fields which, depending upon the specifics of a given measurement configuration, are ten to fifteen orders of magnitude larger than those due to the magnetic dipoles. It is possible to take advantage of the difference in direction between the beam current field and the field due to beam polarization to design a pickup loop which couples primarily to the beam polarization. Elimination of the beam current field via loop orientation is limited by position stability of the beam, and also by the effect of statistical fluctuations (Schottky

noise) within the beam. As will be explicitly shown in the pickup loop section, the best one might reasonably hope for is to improve the ratio of the signal to this background to about -160dB. Historically, this overwhelming background has rendered impossible the task of measuring the beam magnetic moment. However, with the increasing sophistication of hardware and techniques used to accelerate and manipulate polarized beam, it now appears possible to separate the signal due to the magnetic moment from the signal due to the charge. This separation must be accomplished in the frequency domain, and is possible because the charge is a monopole whose field has the same sign from turn to turn in the accelerator, whereas the moment is a dipole whose field direction might alternate from turn to turn, thus generating lines in the beam spectrum where none exist due to charge.

THE BEAM SPECTRUM

Consider RHIC to be uniformly filled with sixty bunches of equal intensity. The spectrum would then be a comb of lines spaced by the bunching frequency, which in this case is about 4.7 MHz. The envelope of the lines is determined by the Fourier transform of the longitudinal bunch profile. To accomplish our measurement we must utilize the dipole nature of the magnetic moment to create lines in the beam spectrum where none exist due to the beam current. We might begin by alternating the direction of the beam polarization from bunch to bunch, creating lines in the spectrum at half the bunching frequency, every 2.35 MHz. With a uniformly filled RHIC, there would be no lines present due to beam current at odd multiples of 2.35 MHz. Unfortunately, it is not possible to have a uniformly filled RHIC. There is not only intensity variation from bunch to bunch, but also the 4 bunch abort gap required by kicker rise time. As a result, signals will appear at all harmonics of the 78 KHz revolution frequency, and not just those corresponding to multiples of the 4.7 MHz bunching frequency. One cannot reasonably expect these lines to be down in magnitude from the lines at the bunching frequency by more than about 40 dB. Our lines at odd multiples of 2.35 MHz will lie directly under these rotation harmonics. Alternating polarization direction from bunch to bunch results in a modest improvement in signal to background, from about -160dB to perhaps -130dB. To gain any further improvement requires that we examine the effect of devices like snakes and spin flippers.

THE SPECTRUM WITH SNAKES AND SPIN FLIPPERS

In order that the polarization signal be observable, it must be made to appear at a frequency whose fundamental periodicity is different from that of the revolution frequency. One way to accomplish this is by alternating the

polarization direction from turn to turn. In a machine with one or more full snakes, there is a stable spin direction which is independent of energy. (4) When the polarization points in the stable spin direction, its direction does not change from turn to turn, and the polarization signal has the periodicity of the revolution frequency and cannot produce lines in the beam spectrum which can be used to measure beam polarization. In RHIC the stable spin direction is the y (vertical) direction. Horizontal magnetic field in the x (radial) direction will rotate the polarization vector toward the horizontal plane, producing a component which is initially in the z (beam) direction, and which will then precess about the vertical. Because RHIC has a fractional spin tune of one half, the direction of this component will reverse from turn to turn, and the effect of the horizontal field will cancel from turn to turn. However, if the direction of the magnetic field is reversed from turn to turn, the effect of these kicks on the polarization direction is then cumulative. In this manner it is possible to flip the spin. (5) To measure polarization it is not necessary to fully flip the spin. We need only perturb the beam slightly to produce a horizontal polarization component, measure the polarization, then rotate it back to the vertical.

An ingenious method has been proposed for such a spin flipper in RHIC. (6) It rests upon the fact that the spin tune and the betatron tune are not harmonically related, so that it is possible to kick the beam to flip the spin, and simultaneously kick the beam to undo the betatron oscillations resulting from previous spin flip kicks. It requires only a single fast kicker, able to deflect a single beam bunch vertically by an angle δ, and which can be placed at any available section in the accelerator. This deflection results in rotation of the polarization direction about the x-axis by an angle

$$\psi = G\gamma\delta \qquad (1)$$

where G = 1.793 is the magnetic anomaly of the proton. If the kicker operates at a frequency $f_{flip} = \nu_s f_r$ where ν_s is the fractional spin tune and f_r is the revolution frequency, then the resonance condition is satisfied and the spin direction of each particle in the beam bunch will be rotated about the x-axis by the angle ψ every time the beam bunch passes the kicker. In RHIC we have $\nu_s = 1/2$ and f_r=78KHz, so that f_{flip}=39KHz. Bunch deflection with such a frequency will result in large betatron oscillations. In order to minimize these oscillations, and the resulting emittance growth, another deflection pulse with a 'proper' frequency, amplitude and phase can be superposed on the spin flip pulse. As an example, let the spin kick deflection be δ=1μrad, the fractional betatron tune of the accelerator be ν_b=0.6, the betatron function at the location of the deflector be β=25m, and the frequency and amplitude of the superposed pulse be $\nu_k = 2\nu_b - \nu_s$ and 2δ. Figure 1 shows the result of simultaneous spin flipping and correction.

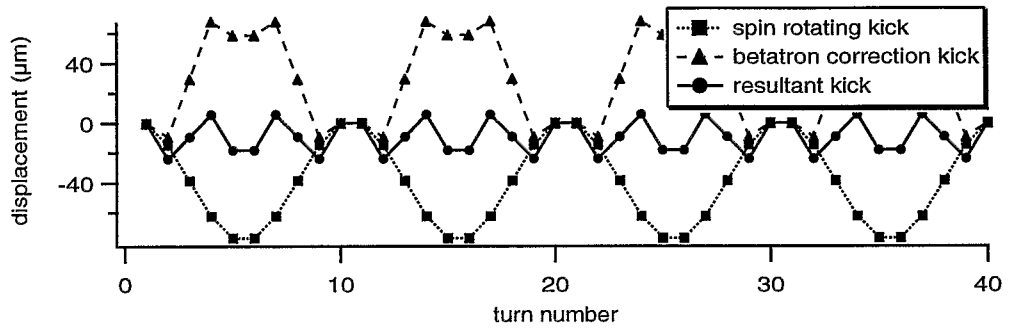

FIGURE 1. Beam Displacement due to Spin Flipping and Correction

Only that component of the polarization which is rotated away from the stable spin direction is subject to the depolarization which results from the effect of spin tune spread over many turns. In a typical polarization measurement the beam might be kicked until the component normal to the stable spin direction has a value of 10% of the total polarization. Because the components add vectorially, the component remaining in the stable spin direction would have a value of 99.5% of the total polarization, so that even in the unlikely worst case of complete decoherence of the perturbed component of the polarization, the total beam polarization would be only minimally affected.

Suppose that the beam is kicked as outlined above to produce a horizontal component. This component will initially be parallel to the beam, whereas polarization in the transverse x direction is required to make the measurement. As the beam proceeds through the main dipoles the longitudinal component precesses about the y axis. If we locate the kickers at 12 o'clock in the RHIC ring, and the pickup loops at 10 o'clock and 2 o'clock, the amount of precession between kickers and pickups will be given by eq. 1, with $\delta = \pi/3$. The condition for which this component lies precisely in the x direction is $G\gamma = 3(2n-1)/2$. For $\gamma = 266$ this gives $n = 160$. While it is not necessary to have the normal component precisely in the x direction to measure polarization, it is clear that this condition is satisfied at frequent intervals in the RHIC energy range.

THE PICKUP LOOP

The field due to the dipole falls off with distance more quickly than the field due to the charge. To maximize both the magnitude of the signal and the signal-to-background ratio, it is desirable to bring the loop as close as possible to the beam. A possible loop configuration is shown in Fig. 2. The beam direction is along the z axis, which is drawn foreshortened in this figure. The ends of the loop are bent out of the y-z plane to provide 10 σ of clearance for the beam. The loop is configured to provide maximal coupling to magnetic field due to magnetic moment pointing in

the x direction, and minimal coupling to field due to beam current. The amount of flux due to magnetic moment which might be captured by the loop if all the polarization were kicked into the x direction can be found by integrating the vector potential over the perimeter. (7)

$$\Phi = \frac{\mu_0}{4\pi}\int_0^{z/2} \frac{4\cdot\mu_p\cdot n_p\cdot n_b\cdot n_l\cdot P\cdot\gamma\cdot 10\cdot\sigma_y}{64\left(x^2+\left(10\cdot\sigma_y\right)^2+\gamma^2 z^2\right)^{3/2}}dz \tag{2}$$

For $n_p = 10^{11}$, $n_b = 60$, $P = 0.7$, $\gamma = 266$, $\sigma_y = 0.35$ mm, $x = 0$, $z = 0.5$ m, a bunch spacing of 64 m, $\Phi_0 = 2\text{x}10^{-15}$ T-m^2, and the number of loops $n_l = 3$ to impedance match to the 2 μH input inductance of the squid, the flux captured per turn is about $\Phi = 0.01\ \Phi_0$. As will be discussed in more detail in the squid section, typical squid flux noise levels are between 10^{-5} and 10^{-6} $\Phi_0/\text{Hz}^{1/2}$.

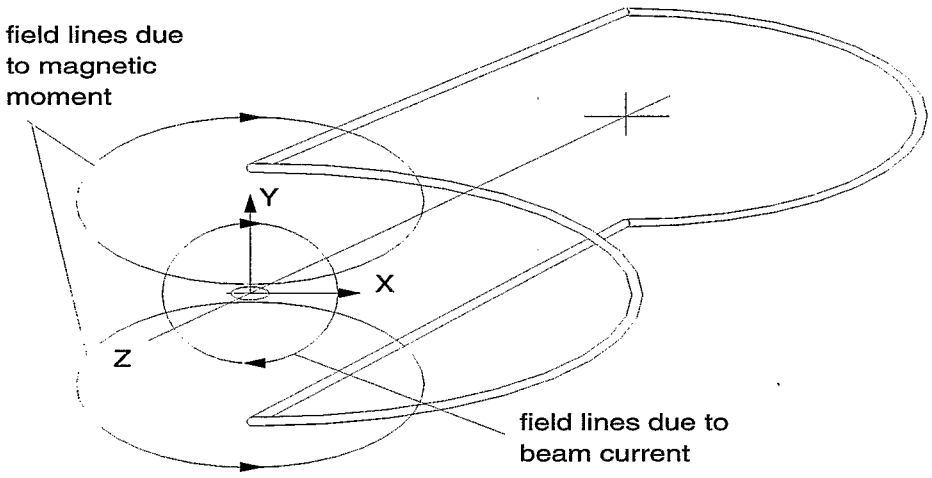

FIGURE 2. The Pickup Loop

The background flux due to the beam current is zero when the loop is perfectly aligned. The flux captured by the loop as the result of a small vertical misalignment δ is

$$\Phi_b = \frac{\mu_0}{4\pi}\int_{-z/2}^{z/2}\int_{10\cdot\sigma_y-\delta}^{10\cdot\sigma_y+\delta} \frac{n_l\cdot n_p\cdot n_b\cdot\beta\cdot\gamma\cdot q}{64\cdot(x^2+\left(10\cdot\sigma_y\right)^2)}dydz \tag{3}$$

where q is the charge of the proton. For a displacement $\delta = 1$ micron, the signal to background ratio is a few 10^{-9}, and the signal is about 170 dB down from the background. If we choose a signal line between the weakest revolution lines, this background might be reduced to about +140 dB. It can appear either at the revolution lines as a result of closed orbit distortions, or at the betatron lines as a result of coherent motion.

Another source of background is Schottky noise within the beam. The flux captured by the loop as a result of statistical fluctuations in position is

$$\Phi_b = \frac{\mu_0}{4\pi}\int_{-z/2}^{z/2}\int_{10\cdot\sigma_y-\sigma_y}^{10\cdot\sigma_y+\sigma_y}\frac{n_l\cdot n_b\cdot\sqrt{n_p}\cdot\beta\cdot\gamma\cdot q}{64\cdot(x^2+(10\cdot\sigma_y)^2)}dydz \tag{4}$$

Here the signal to background ratio is about 10^{-8}, and to first order this is independent of beam position. The signal is about 160 dB down from the Schottky noise in the beam. Again by choosing the location of the signal line this background might be reduced to about +130 dB. It will appear as satellites of the revolution lines and the betatron lines.

SQUIDS

The squid measures magnetic flux; in this it is unlike most beam instrumentation, which measures the *time derivative* of electric or magnetic flux. (8) When flux is applied to the squid loop, voltage proportional to the flux appears across the loop, at the same frequency as the applied flux. The squid comprises a superconducting loop which is interrupted in two places by weak links, or Josephson junctions. When magnetic flux is applied normal to the plane of the loop, a shielding current flows in the loop to resist penetration of the flux into the superconductor, and thence into the loop. Because the shielding current must tunnel to flow through the junctions, the phase of the Cooper pair electron wave function changes across the junctions, and a voltage tries to appear across each junction. This voltage is of opposite sign at the ends of the superconductors which join the junctions into a loop, resulting in no measurable effect. However, if a bias current is applied across the junctions, it will add to the current through one of the junctions, and subtract from the current through the other. The magnitude of the voltage across the junctions then no longer cancels, and can be measured. The DC response of the squid is important in our application; it permits efficient measurement at low frequency without excessively large pickups. The upper limit of frequency response is set by the self resonant frequency of the squid loop, and is typically in the range of 10 to 100 GHz. In most squid applications the squid is operated in a flux locked loop configuration. The bandwidth of flux locked loops is typically a few hundred KHz, although recent development has raised the upper limit to about 5 MHz, and further extension to 20 MHz is predicted. (9) Finally, the squid has good dynamic range, is extremely sensitive, and has, most importantly, an extremely low noise floor. When operated in the flux locked loop mode, the upper limit of the approximately 100 dB of squid dynamic range is the flux quantum, and this upper limit corresponds to the noise floor of any other available magnetic field transducer. The noise floor of the squid sits better than

100 dB below that level, at about 10^{-5} to 10^{-6} $\Phi_0/Hz^{1/2}$. Typical transfer functions for squids are in the range of 1 to 100 mV/Φ_0.

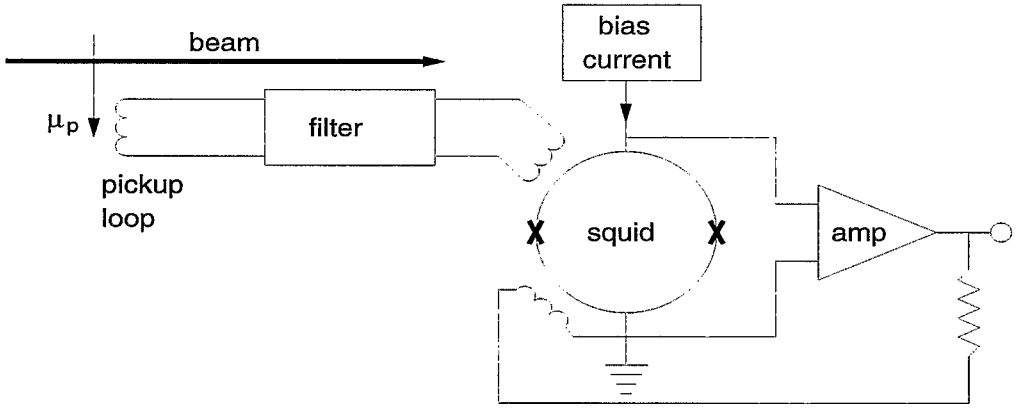

FIGURE 3. Block Diagram

Figure 3 is a block diagram showing the squid as it might be used in our application. The signal from the magnetic moment of the beam is coupled through the pickup loop into a filter. The filter prevents the betatron signals and revolution harmonics from being coupled into the squid loop. The amplifier output is coupled back into the squid, closing the flux locked loop. As mentioned above, there is recent improvement in flux locked loop bandwidth. It is also possible to lock the loop at a lower bandwidth, and pick off high frequency signals from the squid before the flux locked loop.

IMPLEMENTATION

It is desirable to have the pickup loop shown in Fig. 2 at room temperature. This reduces cost, and simplifies installation, maintenance, and modifications. With reasonable conductor size, the loop resistance might be about 1 milliohm. At room temperature the Johnson noise current due to this resistance would correspond to about 10^{-5} $\Phi_0/Hz^{1/2}$, which suggests that it is feasible to consider a room temperature pickup. In the simplest implementation this pickup would be surrounded by room temperature shielding. At the closest practical distance a cryostat would be positioned immediately adjacent to the beamline. The filter and squid would be surrounded by superconducting shielding within the cryostat. It is essential to minimize the number and maximize the quality of connections between the pickup and the cryostat. The pickup would be free to move in the x direction, towards and away from the beam. Fine tuning of the relative position of beam and pickup could be accomplished with steering magnets, by translating the pickup vacuum chamber horizontally and vertically, or by their combination.

As previously outlined, our signal shows up as AM sidebands of bunching subharmonics. Suppose that we look at the AM sideband which is 39 KHz away from the 2.35 MHz bunching subharmonic. If we build a fifth order Butterworth superconducting bandpass filter with a Q of 10^4 and a center frequency of 2.389 MHz, the 3 dB passband will be about 240 Hz wide, and signals at the betatron lines 25 KHz away will be attenuated by about 200 dB. (10) Such a filter would have a characteristic time of about 4 msec, corresponding to about 300 revolutions in RHIC. During this time the envelope of the output of the filter would rise as $e^{-t/4ms}$, so that after 300 revolutions the flux applied to the squid would be about 0.63 of the flux at the filter input from a single revolution. If we have 10% of the total polarization kicked into the horizontal plane, this will be about 10^{-3} flux quanta. A measurement might consist of the following sequence:

-Move the loop in while servoing beam and loop position to null output;
-measure background;
-kick and damp, and measure signal plus background;
-kick and damp back, and measure background;
-move the loop out.

The measurement would be the difference between two curves, the background and the inverse exponential of signal plus background. Lineshape analysis, digital filtering, and further signal processing can then be applied.

OTHER POSSIBILITIES

In a machine with zero chromaticity, the Schottky spectrum at low frequencies yields less information than at high frequencies. Because of the large coherent signals at multiples of the revolution frequency, the Schottky signals at the betatron lines are observed more easily than those at the rotation harmonics. The envelopes of their synchrotron satellites are determined by Bessel functions whose argument contains the bunch length, which for nanosecond bunches means that the higher terms differ from zero significantly only at frequencies above several hundred MHz. As a result, the only information yielded by the low frequency Schottky spectrum would be the (fractional) incoherent tune and the amplitude-dependent tune spread, which is manifested in the width of the central betatron satellite. Non-zero chromaticity both shifts and broadens the envelopes, so that many satellites are present at low frequencies. (11, 12) This contrasts with the high frequency case, where the width of the betatron side bands is determined primarily by the variation in revolution frequency. Hence the low frequency Schottky signals complement the high frequency ones, permitting direct measurement of the chromaticity. Moreover, given the extremely low noise levels obtained using the squid, with proper attenuation and perhaps a different filter we might hope to probe this Schottky spectrum in unprecedented detail.

At a large electron machine, like LEP or HERA, there are no snakes. However, it is possible to apply the technique presented here by adjusting the machine energy such that the natural fractional spin tune is 1/2. The additional required hardware is then only the fast vertical kicker and the squid polarimeter. At such a machine one gains the relativistic gamma factor, the ratio of electron to proton magnetic moment, and reduced transverse beam size, so that both the signal and the signal to background are about three orders of magnitude larger than at RHIC.

Finally, there is an additional interesting possibility which might be opened at RHIC by fast high resolution polarization measurement. In the discussion about spin flippers it was assumed that the spin tune was precisely known, and that the spin flip kick was properly phased to the spin tune. The spin flip resonance is narrow, and kicking off resonance can produce depolarization. While this is not a problem for the polarization measurement, where only a small component of the polarization is rotated into the horizontal plane, and then only for a time short relative to the decoherence time, it could be a problem for spin flipping. One possible solution is to sweep the kick over the resonance. This requires approximate knowledge of the spin tune, so that the sweep frequency spans the resonance, and more detailed knowledge of the resonance width and shape, so that the effective integrated kick is correct. Another proposed solution is coherent spin flip, the 'beam maser effect'. (3) Coherent spin flip would be accomplished by using the polarimeter output and the spin flip kicker to close a feedback loop around the polarized beam. This would ensure that the spin flip kick is properly phased to the spin tune, and would result in a distinctive signature for the polarization signal, further helping to separate it from the background. It has been suggested that this might also remove the requirement that spin flip be accomplished in a time short relative to the decoherence time to avoid depolarization. (3, 13) The spin might then be flipped much more slowly, say in 10^5 turns, which would reduce kicker strength requirements, and could open the door to a series of more detailed accelerator spin studies.

CONCLUSION

There is a good possibility that the technique described here could be used to measure polarization at RHIC. There is precedent for using squids in the magnetically noisy accelerator environment. (14) However, the beam spectrum has never been explored at this level of sensitivity, and there is concern that unexpected noise or signals might exist. Because of the large dynamic range of the squid, the narrow filter bandwidth, and the possibility of background subtraction, a good measurement can be accomplished in the presence of significant noise and background. A next step would be to explore the spectrum in a machine similar to RHIC, perhaps with a squid-based Schottky detector at the AGS.

ACKNOWLEDGEMENTS

The authors acknowledge helpful discussions with many people, including but not limited to the following individuals: M.M. Blascewicz, R.C. Connolly, Ya. S. Derbenev, M.A. Goldman, M.A. Harrison, H. Huang, A.D. Krisch, G.R. Lambertson, R. Lin, V.R. Mane, F.G. Mariam, W.W. MacKay, R.A. Phelps, A.G. Ratti, T. Roser, W.A. Ryan, R.L. Siemann, R.E. Sikora, G.A. Smith, A.N. Stillman, M.J. Syphers, S. Tepikian, J. Wei,...

REFERENCES

1. Cameron, P.R., unpublished notes, 1983.
2. Barber, D.P., Cabrera, B., and Montague, B.W., private communications, 1983.
3. Derbenev, Ya. S., "RF-resonance Beam Polarimeter" in *Proceedings of the Eleventh International High Energy Spin Physics Symposium* (AIP 343, Bloomington, IN, 1994) pp. 264-272.
4. Derbenev, Ya. S. and Kondratenko, A.M., "On the Possibility to Obtain High Energy Polarized Particles in Accelerators and Storage Rings", Part. Accel. 8, (115) 1978.
5. Caussyn, B. D. et al, "Spin Flipping a Stored Polarized Proton Beam", PRL 73 (21), Nov 21, 1994, pp. 2857.
6. Roser, T., private communication, February, 1996.
7. VanBladel, J., Relativity and Engineering, Springer-Verlag, New York, 1984.
8. Clarke, J., "Squids: Theory and Practice" in *The New Superconducting Electronics* (Kluwer, The Netherlands, 1993) pp. 123-180.
9. Drung, D., Matz, H., and Koch, H., "A 5 MHz bandwidth SQUID magnetometer with additional positive feedback", RSI 66 (4), April 1995, pp. 3008-3015.
10. Williams, A.B. and Taylor, F.J., Electronic Filter Design Handbook, McGraw-Hill, New York, 1988.
11. Siemann, R. L., "Spectral Analysis of Relativistic Bunched Beams", these proceedings.
12. Chattopadhyay, S., "Some Fundamentals of Fluctuations and Coherence in Charged Particle Beams in Storage Rings", CERN, 84-11.
13. Derbenev, Ya. S., private communication, May, 1996.
14. Peters, A. et al, "A Cryogenic Current Comparator for Nondestructive Beam Intensity Measurements", Proc. of the Fourth European Particle Accelerator Conference, EPAC, May, 1994, pp.290-292.