AD/RHIC/RD–67

RHIC PROJECT

Brookhaven National Laboratory

Transmission Line Analysis of Dielectric-Loaded Ferrite Kicker

H. Hahn and E. B. Forsyth

June 1994

Submitted to
Fourth European Particle Accelerator Conference
London, England
June 27 - July 1, 1994

BNL-49928

Transmission Line Analysis of Dielectric-Loaded Ferrite Kicker *

H. Hahn and E. B. Forsyth
Brookhaven National Laboratory
Upton, NY 11973-5000

Abstract

The RHIC injection kicker is constructed as a C-shaped ferrite kicker in which the ferrite blocks are spaced apart and the interstice is filled with high-permittivity dielectric. The electric properties of the kicker, such as characteristic impedance and propagation velocity, are usually analyzed as a low pass filter with lumped L and C elements. In the present paper, the kicker will be considered a transmission line with anisotropic medium in order to correctly describe the layered ferrite/dielectric structure. This treatment is valid at low frequencies where the wavelength is much larger than a ferrite/dielectric cell length. The analytical results are compared with measurements on a kicker model, thereby confirming that, in practice, the anisotropic approximation in the long-wavelength limit represents an adequate kicker description.

1 INTRODUCTION

In order to provide the maximum luminosity in the Relativistic Heavy Ion Collider (RHIC) now under construction at Brookhaven, the injection system is designed to fill 114 RF buckets, spaced at 112 nsec intervals. To achieve this performance with 20 nsec long bunches, the maximum time available for field rise-time in the injection kicker is 92 nsec. In addition, minimizing injection errors requires that the flat-top variation be held to better than 1% during the passage of the incoming bunch. Electrically, the kicker must act as a band-pass filter with a bandwidth from $\sim$ 3 to 30 MHz. These requirements lead to the choice of a magnet with inductive and capacitive cells distributed along the length so that the composite structure behaves as a transmission line for the excitation waveform.

The first "transmission line" kicker was built by O'Neill.[1] A brief comparison of transmission line and lumped kickers is found in an earlier review paper.[2] In previous designs, the capacitive elements have often added significant mechanical design complications. The RHIC ferrite-dielectric composite magnet has a relatively simple mechanical design which is achieved by using high-permittivity ceramic, a concept first investigated at SLAC.[3] The high-permittivity dielectric is particularly useful at the lower impedance levels. A diagram of the ferrite-dielectric cell structure is shown in Fig. 1.

The magnet was originally designed using a low frequency approximation to an $L-C$ π network with lumped elements. The structure has also been analyzed as a transmission line assuming uniform isotropic properties for the ferrite-dielectric cells.[4] In the present paper, the kicker will be considered a transmission line with anisotropic medium in order to correctly describe the layered ferrite/dielectric structure. This treatment is, of course, valid only at low frequencies where the wavelength is much larger than a ferrite/dielectric cell length while the skin depth is smaller than the conductor thickness, that is 10 kHz $\ll f \ll$ 100 MHz with the upper frequency limit due to the π-mode cell resonance. The comparison with results measured on a kicker model indicate that, in practice, the anisotropic approximation in the long-wavelength limit represents an adequate kicker description.

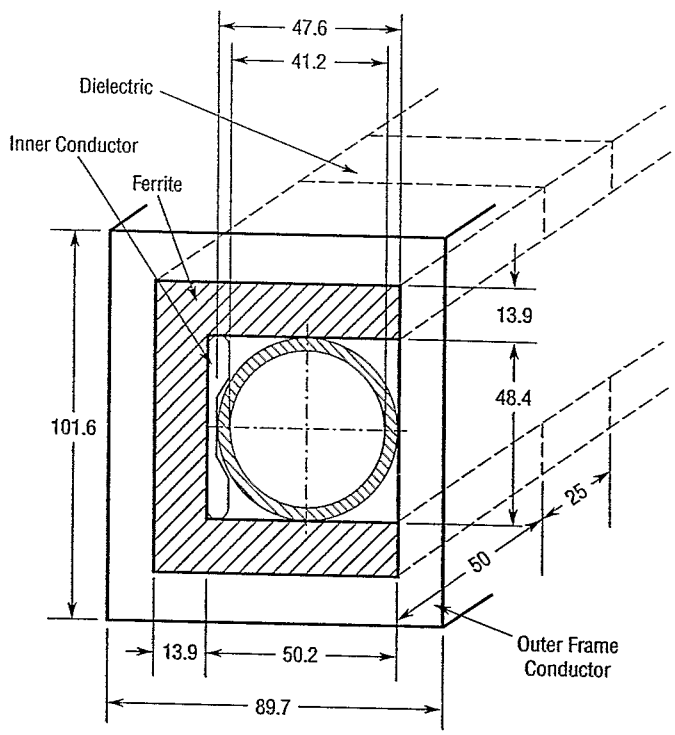

Figure 1: RHIC Injection Kicker Geometry (mm)

2 THE FIELD EXPRESSIONS

A full waveguide analysis of the kicker would be prohibitively complicated, even in the anisotropic approximation, and is not mandatory to obtain characteristic impedance Z_c and propagation velocity; hence the simplified model shown in Fig. 2 will be used for the present

*Work performed under the auspices of the U.S. Dept. of Energy

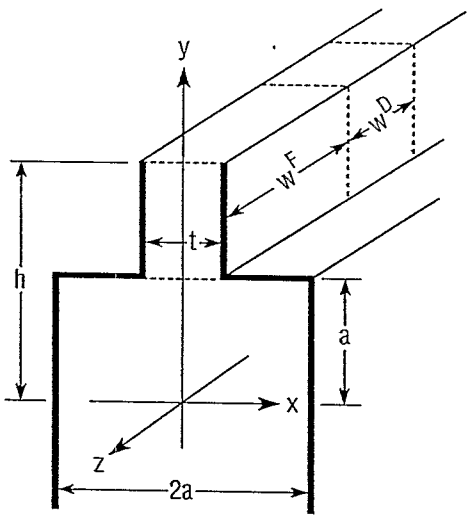

Figure 2: Kicker Geometry, Simplified for Analysis

study. The model neglects details of the top and bottom regions, and thus assumes that the inductance is primarily determined by the kicker aperture and the capacitance by the straight return path. The geometrical quantities determining the characteristic impedance are well defined with the exception of h, which represents the effective length of the return path and thus includes the details of the top and bottom region. Since Z_c depends primarily on the transverse dielectric constant, a choice of h which best renders the low frequency capacitance is indicated. A plausible value is $h \approx 2a + t$.

The expression for the time harmonic electric and magnetic fields propagating in the (opposite) direction of the beam are given by (natural units $c = \mu_0 = 1$, time-dependence e^{jwt} suppressed) in the aperture

$$\begin{aligned} E_x &= B_0 \frac{\omega}{\kappa} \cosh \Upsilon y \; e^{-j\kappa z} \\ H_y &= B_0 \cosh \Upsilon y \; e^{-j\kappa z} \\ H_z &= -jB_0 \frac{\Upsilon}{\kappa} \sinh \Upsilon y \; e^{-j\kappa z} \end{aligned} \tag{1}$$

with $\Upsilon^2 = \kappa^2 - \omega^2$, and in the ferrite/dielectric composite

$$\begin{aligned} E_x^C &= q^C \frac{\omega}{\kappa} \cos \eta^C (y-h) e^{-j\kappa z} \\ H_y^C &= q^C \frac{1}{\mu_T} \cos \eta^C (y-h) e^{-j\kappa z} \\ H_z^C &= jq^C \frac{\eta^C}{\mu_z \kappa} \sin \eta^C (y-h) e^{-j\kappa z} \end{aligned} \tag{2}$$

with q^C a constant still to be determined and

$$\eta^{C2} = \epsilon_T \mu_z \omega^2 - \frac{\mu_z}{\mu_T} \kappa^2 \tag{3}$$

The ferrite/dielectric composite has ferrite layers, w^F thick with μ^F and ϵ^F, and dielectric layers, w^D thick with ϵ^D and $\mu^D = 1$. In the long-wavelength limit, i.e. κw^F, $\kappa w^D \ll 1$, the composite is quasi-uniform with anisotropic properties, given by[6]

$$\begin{aligned} \epsilon_T &= \frac{\epsilon^D w^D + \epsilon^F w^F}{w^D + w^F}; \; \mu_T = \frac{\mu^F w^F + w^D}{w^D + w^F} \\ \mu_z &= \frac{\mu^F (w^D + w^F)}{\mu^F w^D + w^F} \end{aligned} \tag{4}$$

For the RHIC kicker one has $\mu^F \approx 1500$, $\epsilon^F \approx 10$, and $\epsilon^D \approx 100$ resulting in $\epsilon_T \approx 40$, $\mu_T \approx 1000$, and $\mu_z \approx 3$.

The amplitude constant q^C is determined by the voltage condition at $y = a$,

$$\int_{-a}^{a} E_x dx = \int_{-t/2}^{t/2} E_x^C dx \tag{5}$$

leading to

$$q^C = \frac{2a}{t} \frac{\cosh \Upsilon a}{\cos \eta^C (h-a)} B_0 \tag{6}$$

The dispersion relation $\omega = \omega(\kappa)$ is obtained from continuity of the transverse power flow at $y = a$

$$\int_{-a}^{a} E_x H_z^* dx = \int_{-t/2}^{t/2} E_x^C H_z^{C*} dx \tag{7}$$

leading to

$$\Upsilon \tanh \Upsilon a = \frac{2a}{\mu_z t} \eta^C \tan \eta^C (h-a) \tag{8}$$

3 THE TRANSMISSION LINE EXPRESSIONS

It is often convenient to describe wave propagation by transmission line concepts. The definitions for voltage, current and impedance are somewhat arbitrary and subject only to the condition that the power flow is given by the product voltage × current.[7] In order to establish a correlation with measurable quantities, the current is here defined by the integral

$$\begin{aligned} I &= 2 \int_0^a H_y dy + 2 \int_a^h H_y^C dy \\ &= 2 \left\{ \frac{\sinh \Upsilon a}{\Upsilon} + \frac{q^C}{\mu_T B_0} \frac{\sin \eta^C (h-a)}{\eta^C} \right\} B_0 \end{aligned} \tag{9}$$

The power flow is given by

$$\begin{aligned} P_z = 4a^2 \frac{\omega}{\kappa} B_0^2 \Bigg\{ & \left[\frac{1}{2} + \frac{\sinh 2\Upsilon a}{4\Upsilon a} \right] \\ & + \frac{t}{2a\mu_T} \left(\frac{h}{a} - 1 \right) \frac{q^{C2}}{B_0^2} \left[\frac{1}{2} + \frac{\sin 2\eta^C (h-a)}{4\eta^C (h-a)} \right] \Bigg\} \end{aligned} \tag{10}$$

The characteristic impedance now follows from the definition involving power flow and current

$$Z_c = \frac{P_z}{I^* I} = \frac{\int E_x H_y^* dS}{I^* I} \tag{11}$$

4 THE ANISOTROPIC LONG-WAVELENGTH LIMIT

The above results can be significantly simplified in the long-wavelength limit where $\tanh x \approx \tan x \approx x$. One obtains in SI units for the wave propagation velocity

$$v/c = \frac{\omega}{\kappa} \approx \sqrt{\frac{t}{2a\epsilon_T(1+t/a)}} \tag{12}$$

and the characteristic impedance ($Z_o = c\mu_o \approx 377\ \Omega$)

$$Z_c = Z_o\sqrt{\frac{1}{\{\epsilon_T \frac{2a}{t}(1+t/a)+1\}\{1+\frac{2a}{\mu_T t}(1+t/a)\}}}$$
$$\approx Z_o\sqrt{\frac{t}{2a\epsilon_T(1+t/a)}} \tag{13}$$

For the RHIC kicker one finds $v/c \approx 1/14.8$ and $Z_c \approx Z_o/14.8 = 25.5\ \Omega$ in good agreement with the measured results of 1/11.7 and 24.5 Ω, respectively.

In this approximation, the transverse deflecting force is due to the magnetic field $B_o \approx \frac{1}{2}\mu_o I/a$, with an additional contribution by the electric field of v/c or $\sim 7\%$.

5 PERIODICALLY LOADED TRANSMISSION LINE

The anisotropic approximation to the ferrite/dielectric cell structure is inadequate for the determination of the π-mode cell resonance, where the half wavelength equals the cell length, $w = w^F + w^D$. The knowledge of this resonance is important, since it determines the upper frequency limit.

A description of the kicker which yields the cell resonance is obtained by treating it as a periodcially loaded transmission line, where one cell consisting of $\frac{1}{2}$ ferrite layer + 1 dielectric layer + $\frac{1}{2}$ ferrite layer represents the basic period. The cascade matrix of one cell has the general form

$$\begin{pmatrix} u_{in} \\ i_{in} \end{pmatrix} = \begin{pmatrix} \cos\phi & jZ_c\sin\phi \\ jZ_c^{-1}\sin\phi & \cos\phi \end{pmatrix} \begin{pmatrix} u_{out} \\ i_{out} \end{pmatrix} \tag{14}$$

where the phase shift per cell

$$\phi = \phi(\omega) = \kappa w \tag{15}$$

with the propagation constant κ as defined above. By treating each layer as a section of a uniform transmission line, with phase shift $\phi^D = \kappa^D w^D$ and $\phi^F = \kappa^F w^F$, one can derive the expressions for the phase shift per cell

$$\cos\phi = \cos\phi^D \cos\phi^F - \frac{1}{2}\left(\frac{Z^F}{Z^D} + \frac{Z^D}{Z^F}\right)\sin\phi^D \sin\phi^F \tag{16}$$

and for the characteristic impedance

$$Z_c^2 = Z^D Z^F \times \frac{Z^D \sin\frac{1}{2}\phi^D \cos\frac{1}{2}\phi^F + Z^F \sin\frac{1}{2}\phi^F \cos\frac{1}{2}\phi^D}{Z^D \sin\frac{1}{2}\phi^F \cos\frac{1}{2}\phi^D + Z^F \sin\frac{1}{2}\phi^D \cos\frac{1}{2}\phi^F} \tag{17}$$

The expressions for the propagation constants and characteristic impedance of the uniform transmission line sections are obtained from the above anisotropic results by simply imposing $\epsilon_T = \epsilon$ and $\mu_T = \mu_z = \mu$.

The above expressions were programmed and numerical results were obtained for the RHIC kicker parameters, assuming the frequency dependence of μ given by

$$\mu \sim \frac{1500}{\sqrt{1+(f/2\ \mathrm{GHz})^2}} \tag{18}$$

In the long-wavelength limit, the results obtained are
- for the uniform ferrite section $Z^F \approx 50.3\ \Omega$ and $v/c \approx 1/7.5$
- for the uniform dielectric section $Z^D \approx 6.3\ \Omega$ and $v/c \approx 1/9.2$
- and for the ferrite-dielectric composite structure $Z_c \approx 21.5\ \Omega$ and $v/c \approx 1/12.6$

in adequate agreement with the anisotropic results, thereby confirming the validity of the anisotropic approximation.

At higher frequencies the results start to differ, with the present solution showing a π mode cell resonance of $\sim$ 108 MHz in reasonable agreement with frequency domain measurements. A ferrite with constant $\mu = 1500$ would have a lower cell resonance of $\sim$ 19 MHz and is thus not advantageous.

ACKNOWLEDGEMENTS

The authors wish to acknowledge the help of R. Cassel at SLAC and the following BNL personnel in the design and testing of the injector magnet: J. Bunicci, J. Claus, J. Chang, J. Tuozzolo, and W. Zhang.

REFERENCES

[1] G. K. O'Neill, "Storage Rings for Electrons and Protons", Proc. Int. Conf. High Energy Accelerators and Instrumentation, CERN, Geneva, Switzerland, 1959, p. 125.

[2] E. B. Forsyth and M. Fruitman, "Fast Kickers", Particle Accelerators, vol. 1, 27, 1970.

[3] R. Cassel et al and D. Fiander, "SLC Kicker Magnet Limitations", Proc. IEEE Part. Accelerator Conf., San Francisco, U.S.A., 1991, p. 996, and R. Cassel (private communication).

[4] J. Claus (private communication).

[5] H. Hahn, "Transmission Line Analysis of Dielectric-Loaded Ferrite Kicker", RHIC Technical Note AD/RHIC/RD-66, Brookhaven National Laboratory, Upton, New York, U.S.A., 1994

[6] G. Piefke, Feldtheorie III, Mannheim: Bibliographisches Institut, 1977 p. 314.

[7] C. G. Montgomery, R. H. Dicke and E. M. Purcell, Principles of Microwave Circuits, New York: McGraw Hill Book Co., 1948, ch. 3.