AD/RHIC/RD-122

RHIC PROJECT

Brookhaven National Laboratory

Improved Estimation of Dose Near Vent Exits in the RHIC Collider Tunnel

A. J. Stevens

August 1998

Improved Estimation of Dose Near Vent Exits in the RHIC Collider Tunnel

I. Introduction

One of the most common exhaust vents in the RHIC collider tunnel are those which have a direct view of magnets along the RHIC tunnel. Estimates of the dose at (or near) the exits of these vents[1-3] in the case of a Design Basis Accident beam fault have varied with time as our ability to simulate low energy neutron transport has improved. The degree of access control required on the berm near the exits of these vents (e.g., posting vs. fencing) as RHIC approaches the safety envelope limit of 4 times the design intensity has not yet been decided. This note reports the results of a series of calculations which represent an improvement over an earlier estimate[2] which was limited chiefly by very poor statistics.

II. Description of Calculations and Results

The process employed in these calculations was to vary the location of the vent (or approximation of a vent) in the beam direction relative to the source, which was taken to be the interaction of a 100 GeV/c neutron on a quadrupole beam pipe. At each source position both a Lahet Code System[4] calculation and a CASIM calculation was made of the dose exterior to the vent, and the results added. This "double counts" in total energy, but is necessary in order to be prudent as it compensates for (or more than compensates for) inadequacy in low energy neutron transport in CASIM and high energy statistics in LCS.

The cross section of the vent is shown in Fig. 1(a). The primary difference in this representation and that of Ref. [2] is that the "point detectors" shown in Fig. 1(a) are each at 3 ft. above ground level, and the detectors on the sides are each 1 ft. away from the opening.[5] The 3 ft. height was chosen to approximate the location of the covers of the vents or the mid-point of a person leaning up against the side of the vent. The positions of the point detectors shown in Fig. 1(a) are referred to below as (left to right in the figure) the upstream, middle, and downstream positions.

Fig. 1(b), which must be explained, indicates the approximation used in CASIM. The dotted surface is simply the LCS surface in Fig. 1(a), which closely approximates the actual geometry shown in Fig. 6 of Ref. [2]. The berm surface in the CASIM geometry, however, is the circle shown, through which the cylinders of the vent are "cut." The star density was actually binned in the shells indicated, which are 3 ft. outside the berm surface. Each shell defines 12.5° of the azimuth as shown, with the left hand shell approximating the upstream position in Fig. 1(a), and the right hand shell approximating both the middle and downstream positions.

As mentioned above, the source is 100 GeV/c neutrons. With this choice, a DBA fault corresponding to a loss of one-half of 4 times design intensity on a single magnet, is 2.24×10^{13} interacting neutrons.

Fig. 2 shows the dose per neutron on the downstream side as a function of the vent location relative to the interaction point for both components as well as the total. The dose here (and below) has been multiplied by 2 in anticipation of an increased neutron QF, which has been standard practice in RHIC Project dose estimates. The "more forward" nature of the CASIM dose, remarked on in Ref. [2], is apparent.

Fig. 3 shows the results (also in rem/incident, but with selected DBA fault doses indicated) for all three positions. The maximum dose values are also shown in Table 1 below.

Table 1 Maximum Dose Estimates at the Locations Considered

Location	Dose @ DBA Fault with X2 QF (mrem)
Upstream	150 ± 34
Middle	550 ± 27
Downstream	233 ± 34

III. Comparison with Previous Estimates

In comparing the results above with the previous estimates (for the worst case "middle" position, which is the only direct comparison possible), I choose to "correct" those estimates to the location of the top of the vent cover assumed here, 3 ft. above grade. Using the 2nd leg labyrinth formula of Goebel to do this[1] implies dividing the estimate of Ref. [2] by 1.45 and Ref. [3] by 1.75. The results, which are shown in Table 2[6], are quite satisfactory.

Table 2 Comparison of Estimates at the Vent Cover

Source	Dose Estimate on Vent Cover (in mrem with X2 QF)
This Note	550 ± 27
Ref. [2]	589 ± 128
Ref. [3] (Archetype B-2)	475

<u>References/Footnotes</u>

1. P.J. Gollon, "Shielding of Multi-Leg penetrations into the RHIC Collider," AD/RHIC/RD-76, October, 1994.

2. A.J. Stevens, "Comparison of CASIM with the LAHET Code System," AD/RHIC/RD-115, August, 1997.

3. Memorandum from A.J. Stevens to S. Musolino dated 8/26/97, Subj: "Scaling Gollon's Duct and Labyrinth Calculations."

4. Lahet 2.7, MCNP4A.

5. The diameter of the opening in this calculation was taken to be 47 inches instead of the 46 inches of Ref. [2] and 48 inches used by Gollon. The actual opening is a corrugated structure whose opening varies between 46 and 48 inches.

6. Refs. [1] and [3] have no error estimates.

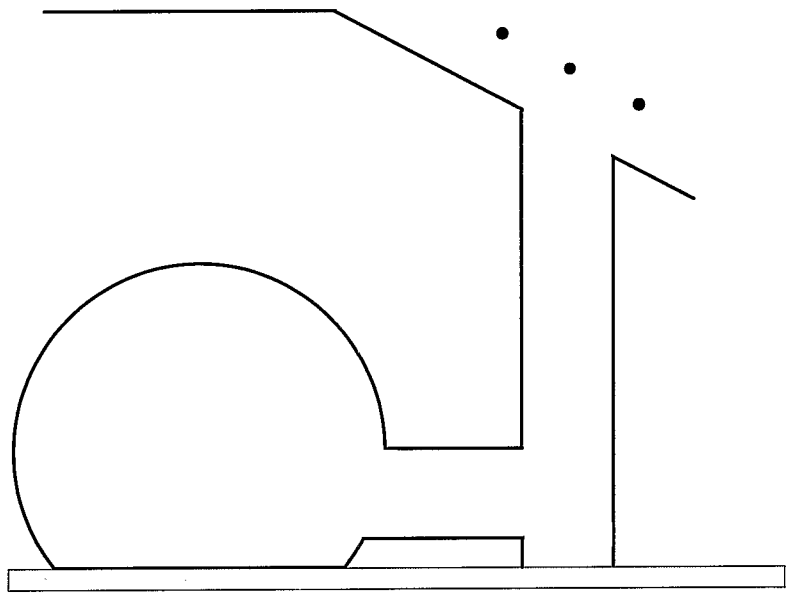

(a) LCS Cross Section

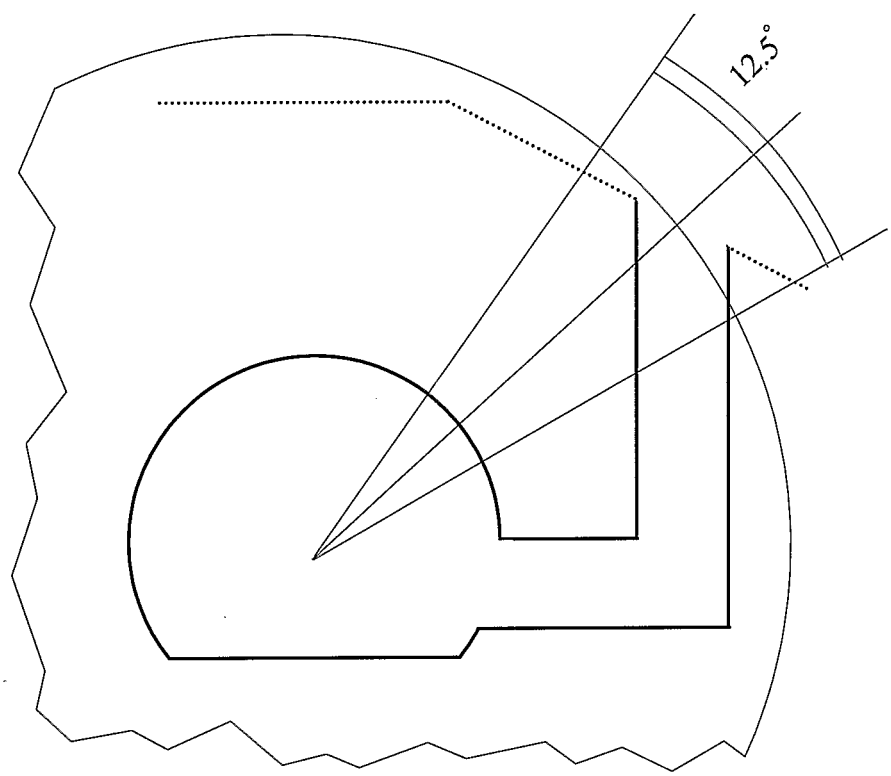

(b) CASIM Approximation

Fig. 1 Transverse Geometry at the Vent Location

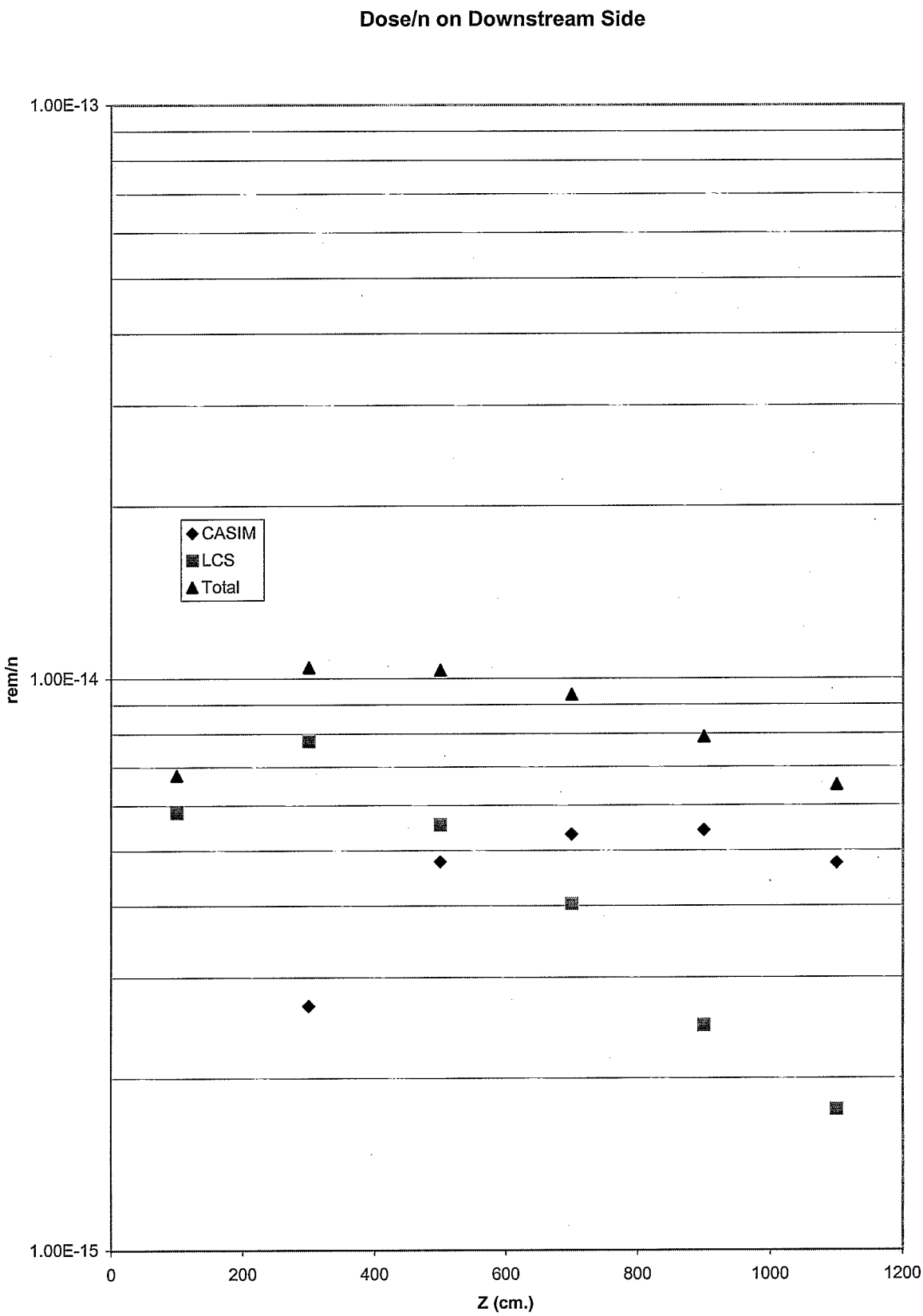
Dose/n on Downstream Side
1.00E-13
1.00E-14
1.00E-15
rem/n
CASIM
LCS
Total
0
200
400
600
800
1000
1200
Z (cm.)

Fig. 2

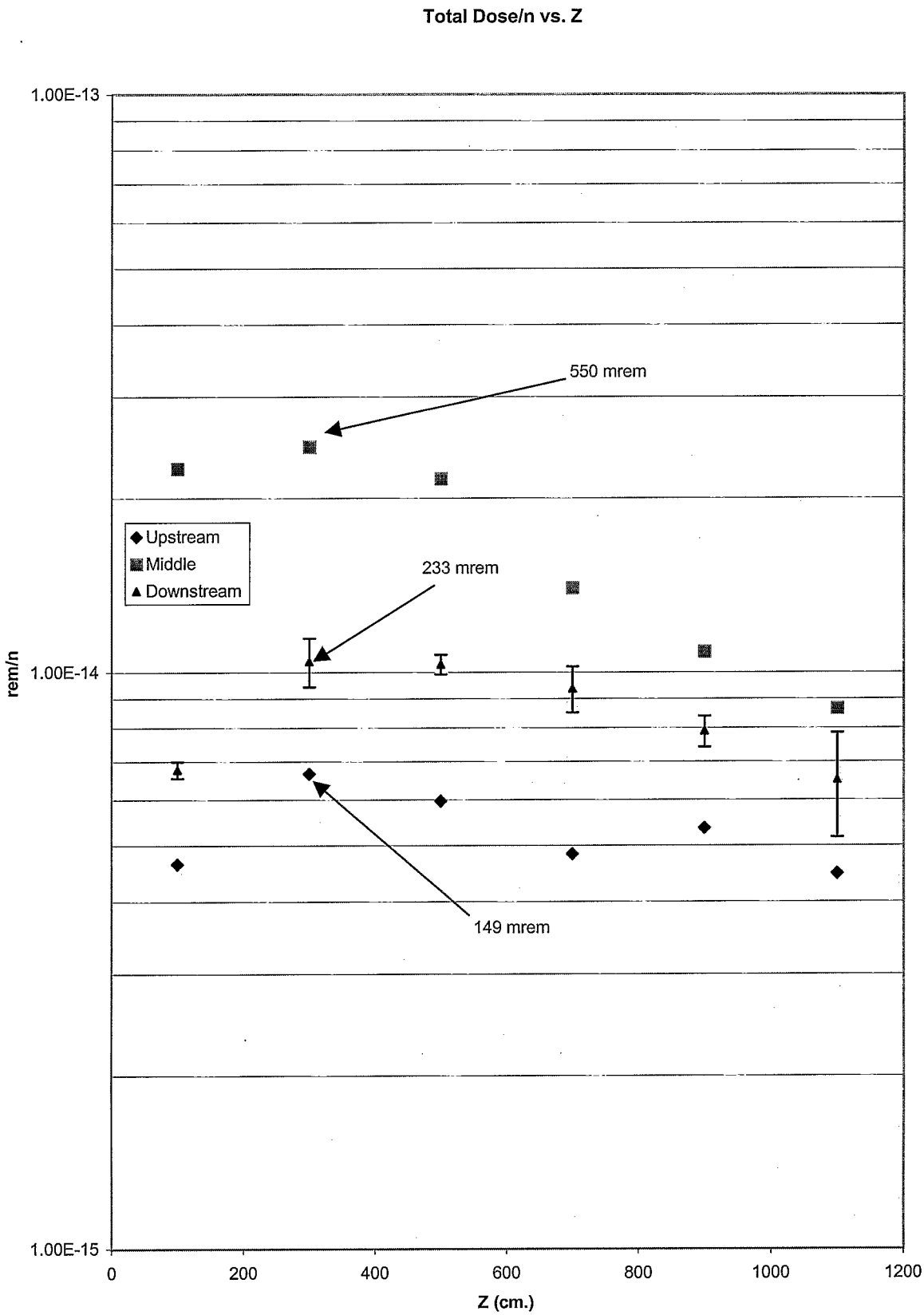
Total Dose/n vs. Z
1.00E-13
1.00E-14
1.00E-15
rem/n
0
200
400
600
800
1000
1200
Z (cm.)
550 mrem
233 mrem
149 mrem
Upstream
Middle
Downstream

Fig. 3