Errata

Title & Document Type: 8657B Synthesized Signal Generator Operation and Calibration Manual

Manual Part Number: 08657-90006

Revision Date: 1989-02-01

HP References in this Manual

This manual may contain references to HP or Hewlett-Packard. Please note that Hewlett-Packard's former test and measurement, semiconductor products and chemical analysis businesses are now part of Agilent Technologies. We have made no changes to this manual copy. The HP XXXX referred to in this document is now the Agilent XXXX. For example, model number HP8648A is now model number Agilent 8648A.

About this Manual

We've added this manual to the Agilent website in an effort to help you support your product. This manual provides the best information we could find. It may be incomplete or contain dated information, and the scan quality may not be ideal. If we find a better copy in the future, we will add it to the Agilent website.

Support for Your Product

Agilent no longer sells or supports this product. You will find any other available product information on the Agilent Test & Measurement website:

www.tm.agilent.com

Search for the model number of this product, and the resulting product page will guide you to any available information. Our service centers may be able to perform calibration if no repair parts are needed, but no other support from Agilent is available.

Agilent Technologies

HP 8657B SYNTHESIZED SIGNAL GENERATOR

(Including Options 001, 002, and 003)

Operation and Calibration Manual

SERIAL NUMBERS

This manual provides complete information for instruments with serial-number prefixes:

2948U or 2948A and above.

rev.01DEC89

NOTE, use this manual only with instruments that have a "U" or "A" in their serial-number prefix.

First Edition

This material may be reproduced by or for the U.S. Government pursuant to the Copyright License under the clause at DFARS 52.227-7013 (APR 1988).

Copyright ©HEWLETT-PACKARD LIMITED 1989
SOUTH QUEENSFERRY, WEST LOTHIAN, SCOTLAND EH30 9TG

OR

Copyright ©HEWLETT-PACKARD COMPANY 1989
EAST 24001 MISSION AVENUE, TAF C-34, SPOKANE, WASHINGTON, U.S.A. 99220

Operation and Calibration Manual HP Part 08657-90006

Other Documents Available:
Service Manual HP Part 08657-90007
Microfiche Operation and Calibration Manual HP Part 08657-90008
Microfiche Service Manual HP Part 08657-90009

Printed in U.K. and U.S.A.: February 1989

HEWLETT PACKARD

CERTIFICATION

Hewlett-Packard Company certifies that this product met its published specifications at the time of shipment from the factory. Hewlett-Packard further certifies that its calibration measurements are traceable to the United States National Bureau of Standards, to the extent allowed by the Bureau's calibration facility, and to the calibration facilities of other International Standards Organization members.

WARRANTY

This Hewlett-Packard instrument product is warranted against defects in material and workmanship for a period of one year from date of shipment. During the warranty period, Hewlett-Packard Company will at its option, either repair or replace products which prove to be defective.

For warranty service or repair, this product must be returned to a service facility designated by HP. Buyer shall prepay shipping charges to HP and HP shall pay shipping charges to return the product to the Buyer. However, Buyer shall pay all shipping charges, duties, and taxes for products returned to HP from another country.

HP warrants that its software and firmware designated by HP for use with an instrument will execute its programming instructions when properly installed on that instrument. HP does not warrant that the operation of the instrument, or software, or firmware will be uninterrupted or error free.

LIMITATION OF WARRANTY

The foregoing warranty shall not apply to defects resulting from improper or inadequate maintenance by Buyer, Buyer-supplied software or interfacing, unauthorized modification or misuse, operation outside of the environmental specifications for the product, or improper site preparation or maintenance.

NO OTHER WARRANTY IS EXPRESSED OR IMPLIED. HP SPECIFICALLY DISCLAIMS THE IMPLIED WARRANTIES OF MERCHANTABILITY AND FITNESS FOR A PARTICULAR PURPOSE.

EXCLUSIVE REMEDIES

THE REMEDIES PROVIDED HEREIN ARE BUYER'S SOLE AND EXCLUSIVE REMEDIES. HP SHALL NOT BE LIABLE FOR ANY DIRECT, INDIRECT, SPECIAL, INCIDENTAL, OR CONSEQUENTIAL DAMAGES, WHETHER BASED ON CONTRACT, TORT, OR ANY OTHER LEGAL THEORY.

ASSISTANCE

Product maintenance agreements and other customer assistance agreements are available for Hewlett-Packard products.

For any assistance, contact your nearest Hewlett-Packard Sales and Service Office. Addresses are provided in this manual.

HP 8657B SYNTHESIZED SIGNAL GENERATOR

(Including Options 001, 002, and 003)

Operation and Calibration Manual

SERIAL NUMBERS

This manual provides complete information for instruments with serial-number prefixes:

2846U or 2846A and above.

rev.27MAR89

NOTE, use this manual only with instruments that have a "U" or "A" in their serial-number prefix.

First Edition

This material may be reproduced by or for the U.S. Government pursuant to the Copyright License under the clause at DFARS 52.227-7013 (APR 1988).

Copyright ©HEWLETT-PACKARD LIMITED 1989
SOUTH QUEENSFERRY, WEST LOTHIAN, SCOTLAND EH30 9TG

OR

Copyright ©HEWLETT-PACKARD COMPANY 1989
EAST 24001 MISSION AVENUE, TAF C-34, SPOKANE, WASHINGTON, U.S.A. 99220

Operation and Calibration Manual HP Part 08657-90006

Other Documents Available:
Service Manual HP Part 08657-90007
Microfiche Operation and Calibration Manual HP Part 08657-90008
Microfiche Service Manual HP Part 08657-90009

Printed in U.K. and U.S.A.: February 1989

HEWLETT PACKARD

CERTIFICATION

Hewlett-Packard Company certifies that this product met its published specifications at the time of shipment from the factory. Hewlett-Packard further certifies that its calibration measurements are traceable to the United States National Bureau of Standards, to the extent allowed by the Bureau's calibration facility, and to the calibration facilities of other International Standards Organization members.

WARRANTY

This Hewlett-Packard instrument product is warranted against defects in material and workmanship for a period of one year from date of shipment. During the warranty period, Hewlett-Packard Company will at its option, either repair or replace products which prove to be defective.

For warranty service or repair, this product must be returned to a service facility designated by HP. Buyer shall prepay shipping charges to HP and HP shall pay shipping charges to return the product to the Buyer. However, Buyer shall pay all shipping charges, duties, and taxes for products returned to HP from another country.

HP warrants that its software and firmware designated by HP for use with an instrument will execute its programming instructions when properly installed on that instrument. HP does not warrant that the operation of the instrument, or software, or firmware will be uninterrupted or error free.

LIMITATION OF WARRANTY

The foregoing warranty shall not apply to defects resulting from improper or inadequate maintenance by Buyer, Buyer-supplied software or interfacing, unauthorized modification or misuse, operation outside of the environmental specifications for the product, or improper site preparation or maintenance.

NO OTHER WARRANTY IS EXPRESSED OR IMPLIED. HP SPECIFICALLY DISCLAIMS THE IMPLIED WARRANTIES OF MERCHANTABILITY AND FITNESS FOR A PARTICULAR PURPOSE.

EXCLUSIVE REMEDIES

THE REMEDIES PROVIDED HEREIN ARE BUYER'S SOLE AND EXCLUSIVE REMEDIES. HP SHALL NOT BE LIABLE FOR ANY DIRECT, INDIRECT, SPECIAL, INCIDENTAL, OR CONSEQUENTIAL DAMAGES, WHETHER BASED ON CONTRACT, TORT, OR ANY OTHER LEGAL THEORY.

ASSISTANCE

Product maintenance agreements and other customer assistance agreements are available for Hewlett-Packard products.

For any assistance, contact your nearest Hewlett-Packard Sales and Service Office. Addresses are provided in this manual.

SAFETY CONSIDERATIONS

GENERAL

This product and related documentation must be reviewed for familiarization with safety markings and instructions before operation.

This product is a Safety Class I instrument (provided with a protective earth terminal).

BEFORE APPLYING POWER

Verify that the product is set to match the available line voltage and the correct fuse is installed.

SAFETY EARTH GROUND

An uninterruptible safety earth ground must be provided from the main power source to the product input wiring terminals, power cord, or supplied power cord set.

SAFETY SYMBOLS

⚠ Instruction manual symbol: the product will be marked with this symbol when it is necessary for the user to refer to the instruction manual (refer to Table of Contents.)

Indicates hazardous voltages.

Indicates earth (ground) terminal.

WARNING The WARNING sign denotes a hazard. It calls attention to a procedure, practice, or the like, which, if not correctly performed or adhered to, could result in personal injury. Do not proceed beyond a WARNING sign until the indicated conditions are fully understood and met.

CAUTION The CAUTION sign denotes a hazard. It calls attention to an operating procedure, practice, or the like, which, if not correctly performed or adhered to, could result in damage to or destruction of part or all of the product. Do not proceed beyond a CAUTION sign until the indicated conditions are fully understood and met.

WARNING

Any interruption of the protective (grounding) conductor (inside or outside the instrument) or disconnecting the protective earth terminal will cause a potential shock hazard that could resulting personal injury. (Grounding one conductor of a two conductor outlet is not sufficient protection).

Whenever it is likely that the protection has been impaired, the instrument must be made inoperative and be secured against any unintended operation.

If this instrument is to be energized via an autotransformer (for voltage reduction) make sure the common terminal is connected to the earth terminal of the power source.

Servicing instructions are for use by service trained personnel only. To avoid dangerous electric shock, do not perform any servicing unless qualified to do so.

Adjustments described in the manual are performed with power supplied to the instrument while protective covers are removed. Energy available at may points may, if contacted, result in personal injury.

Capacitors inside the instrument may still be charged even if the instrument has been disconnected from its source os supply.

For continued protection against fire hazard, replace the line fuse(s) only with 250V fuse(s) of the same current rating and type (for example, normal blow, time delay, etc.) Do not use repaired fuses or short circuited fuseholders.

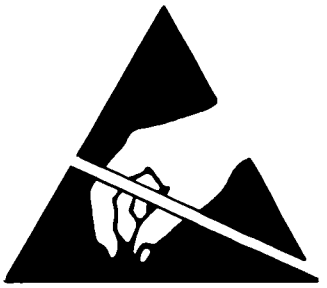

ATTENTION
Static Sensitive Devices

This instrument was constructed in an ESD (electro-static discharge) protected environment. This is because most of the semi-conductor devices used in this instrument are susceptible to damage by static discharge.

Depending on the magnitude of the charge, device substrates can be punctured or destroyed by contact or mere proximity of a static charge. The results can cause degradation of device performance, early failure, or immediate destruction.

These charges are generated in numerous ways such as simple contact, separation of materials, and normal motions of persons working with static sensitive devices.

When handling or servicing equipment containing static sensitive devices, adequate precautions must be taken to prevent device damage or destruction.

Only those who are thoroughly familiar with industry accepted techniques for handling static sensitive devices should attempt to service circuitry with these devices.

In all instances, measures must be taken to prevent static charge build-up on work surfaces and persons handling the devices.

HEWLETT PACKARD

Herstellerbescheinigung

Hiermit wird bescheinigt, daß das Gerät/System

8657B

in Übereinstimmung mit den Bestimmungen von Postverfügung 1046/84 funkentstört ist.

Der Deutschen Bundespost wurde das Inverkehrbringen dieses Gerätes/Systems angezeigt und die Berechtigung zur Überprüfung der Serie auf Einhaltung der Bestimmungen eingeräumt.

Zusatzinformation für Meß- und Testgeräte

Werden Meß- und Testgeräte mit ungeschirmten Kabeln und/oder in offenen Meßaufbauten verwendet, so ist vom Betreiber sicherzustellen, daß die Funk-Entstörbestimmungen unter Betriebsbedingungen an seiner Grundstücksgrenze eingehalten werden.

Manufacturer's declaration

This is to certify that this product 8657B meets the radio frequency interference requirements of directive 1046/84. The German Bundespost has been notified that this equipment was put into circulation and was granted the right to check the product type for compliance with these requirements.

Note: If test and measurement equipment is operated with unshielded cables and/or used for measurement on open set-ups, the user must insure that under these operating conditions, the radio frequency interference limits are met at the border of his premises.

REGIONAL SALES AND SERVICE OFFICES

ASIA

Hewlett-Packard Asia Ltd.
47/F 26 Harbour Rd.
Wanchai, **HONG KONG**
G.P.O. Box 863 Hong Kong
Tel: 5-8330833
Telex: 76793 HPA HX
Cable: HPASIAL TD

CANADA

Hewlett-Packard (Canada) Ltd.
6877 Goreway Drive
MISSISSAUGA, Ontario L4V 1M8
Tel: (416) 678-9430
Telex: 069-8644

EASTERN EUROPE

Hewlett Packard Ges. m.b.h.
Liebigasse 1
P.O. Box 72
A-1222 **VIENNA**, Austria
Tel: (222) 2500-0
Telex: 1 3 4425 HEPA A

NORTHERN EUROPE

Hewlett-Packard S.A.
V.D. Hooplaan 241
P.O. Box 999
NL-118 LN 15 **AMSTELVEEN**
The Netherlands
Tel: 20 5479999
Telex: 18919 hpser

SOUTH EAST EUROPE

Hewlett-Packard S.A.
World Trade Center
110 Avenue Louis-Casai
1215 Cointrin, **GENEVA**,
Switzerland
Tel: (022) 98 96 51
Telex: 27225 hpner
Mail Address:
P.O. Box
CH-1217 Meyrin 1
GENEVA
Switzerland

MIDDLE EAST AND CENTRAL AFRICA

Hewlett-Packard S.A.
Middle East/Central
Africa Sales H.Q.
7, rue du Bois-du-Lan
P.O. Box 364
CH-1217 Meyrin 1
GENEVA
Switzerland
Tel: (022) 83 12 12
Telex: 27835 hmea ch
Telefax: (022) 83 15 35

UNITED KINGDOM

Hewlett Packard Ltd.
Nine Mile Ride
WOKINGHAM
Berkshire, RG113LL
Tel: 0344 773100
Telex: 848805/848814/848912

UNITED STATES OF AMERICA

Customer Information Center
Tel: (800) 752-0900
6:00 AM to 5:00 PM
Pacific Time

EASTERN USA

Hewlett-Packard Co.
4 Choke Cherry Road
ROCKVILLE, MD 20850
Tel: (301) 948-6370

MIDWESTERN USA

Hewlett-Packard Co.
5201 Tollview Drive
ROLLING MEADOWS, IL 60008
Tel: (312) 255-9800

SOUTHERN USA

Hewlett-Packard Co.
2000 South Park Place
ATLANTA, GA 30339
Tel: (404) 955-1500

WESTERN USA

Hewlett-Packard Co.
5161 Lankershim Blvd.
NORTH HOLLYWOOD, CA 91601
Tel: (818) 505-5600

OTHER INTERNATIONAL AREAS

Hewlett-Packard Co.
Intercontinental
Headquarters
3495 Deer Creek Road
PALO ALTO, CA 94304
Tel: (415) 857-1501
Telex: 034-8300
Cable: HEWPACK

TABLE OF CONTENTS

Section 1-General Information

Introduction 1-1
Information Covered by this Manual 1-1
Specifications 1-1
Safety Considerations 1-1
Instruments Covered by this Manua 1-2
Options 1-2
Electrical Options 1-2
Mechanical Options 1-2
Documentation Options 1-3
Warranty Option 1-3
Accessories Supplied 1-3
Accessories Available 1-3
Recommended Test Equipment 1-3
Instrument Description 1-3
Output Amplitude 1-4
Modulation Capabilities 1-4
Hewlett-Packard Interface Bus 1-4

Section 2-Installation

Introduction 2-1
Initial Inspection 2-1
Installation Check list 2-1
Preparation For Use 2-2
Line Voltage Selection and Fuse Replacement 2-2
Power Cables 2-3
Operating Enviroment 2-5
Time Base Selection 2-5
HP-IB Address Selection 2-6
Connection to the HP-IB 2-6
Coaxial Connectors 2-9
Timebase Looping Cable 2-9
Pulse Modulation Input Impedance 2-9
Bench Operation 2-9
Rack Mounting 2-10
Internal Battery 2-10
Storage and Shipment 2-10
Environment 2-11
Packaging 2-11

Section 3-Operation

Introduction . . . 3-1
Local Operation . . . 3-1
Remote Operation (HP-IB) . . . 3-1
User Confidence Tests . . . 3-1
Getting Started . . . 3-2
Switch On . . . 3-2
Front-Panel Features . . . 3-3
Rear-Panel Features . . . 3-4
Demonstration 1 . . . 3-6
Demonstration 2 . . . 3-8
Demonstration 3 . . . 3-9
Error Codes . . . 3-10
Remote Operation (HP-IB) . . . 3-11
Switching Characteristcs . . . 3-21
Selecting the Correct Pulse Modulation Mode . . . 3-22
Detailed Operating Instructions . . . 3-25
- Amplitude . . . 3-26
- Amplitude Conversion . . . 3-28
- Amplitude Offset . . . 3-30
- Amplitude Up/Down . . . 3-31
- Display Amplitude Offset . . . 3-33
- Display . . . 3-34
- Display Sequence . . . 3-35
- Frequency . . . 3-36
- Frequency, Coarse and Fine Tune . . . 3-38
- Frequency, Phase Up/Down . . . 3-40
- Frequency, Up/Down . . . 3-41
- HP-IB Address Display . . . 3-43
- Increment Value Change . . . 3-44
- Increment Value Display . . . 3-46
- Instrument Preset . . . 3-48
- Modulation, AM . . . 3-49
- Modulation, AM Up/Down . . . 3-51
- Modulation, DC FM . . . 3-53
- Modulation, DC FM Up/Down . . . 3-56
- Modulation, External Source . . . 3-58
- Modulation, FM . . . 3-60
- Modulation, FM Up/Down . . . 3-62
- Modulation, Mixed . . . 3-64
- Modulation, Off . . . 3-68
- Modulation, Pulse . . . 3-70
- Modulation, Pulse (Fast Mode) . . . 3-72
- Recall . . . 3-74
- RF On/Off . . . 3-75
- Save . . . 3-76
- Sequence . . . 3-77

User Confidence Tests . . . 3-79

Section4-Performance Tests

Introduction 4-1
Equipment Required. 4-1
Performance Test Record. 4-1
Calibration Cycle 4-1
Abbreviated Performance Testing 4-1
Test Procedures 4-2
Performance Test 1-Spectral Purity 4-3
Performance Test 2-Output Level Accuracy and Flatness 4-14
Performance Test 3-Modulation 4-17
Performance Test 4-Output Leakage. 4-33
Performance Test 5-SWR 4-35

Section 5-Adjustments

Introduction 5-1
Safety Considerations 5-1
Equipment Required. 5-1
Factory-Selected Components 5-1
Post-Repair Adjustments 5-1
Related Adjustments. 5-1
Adjustment 1-Power Supply Voltage. 5-4
Adjustment 2-Reference Voltage 5-5
Adjustment 3-Audio Oscillator Level 5-6
Adjustment 4-AM Offset 5-7
Adjustment 5-50 MHz Reference Oscillator Frequency 5-8
Adjustment 6-50 MHz Reference Oscillator Level 5-9
Adjustment 7-122 MHz Harmonic 5-10
Adjustment 8-FM Pretune 5-11
Adjustment 9-API 1,2,3, and 4 5-13
Adjustment 10-Pedestal 5-15
Adjustment 11-DC FM 5-16
Adjustment 12-Voltage Offset. 5-18
Adjustment 13-400 MHz Bandpass Filter 5-19
Adjustment 14-690 to 740 MHz IF Compensation Adjustment Attenuator Pad Select 5-20
Adjustment 15-Notch Filter. 5-22
Adjustment 16-400 MHz Notch Filter 5-26
Adjustment 17-Level and ALC Loop Detector 5-27
Adjustment 18-AM% and ALC Loop AM. 5-29
Adjustment 19-AM Double Band 5-31
Adjustment 20-FM In Band Gain 5-33
Adjustment 21-FM Deviation. 5-35
Adjustment 22-DC FM Offset 5-37
Adjustment 23-Option 001 MHz Reference Oscillator Frequency 5-38

Section 1
GENERAL INFORMATION

1-1. INTRODUCTION

This manual contains information required to install, operate, test, and adjust the Hewlett-Packard Model 8657B Signal Generator.

Information required to troubleshoot and repair the HP 8657B is contained in the Service Manual, HP part number 08657-90007.

Listed on the title page of this manual, below the manual part number, is a "Microfiche" part number. This number may be used to order 100 × 150 millimeter (4- × 6-inch) microfilm transparencies of this manual. Each microfiche contains up to 96 photo-duplicates of the manual's pages. The microfiche package also includes the latest MANUAL UPDATES supplement, as well as all pertinent Service Notes.

1-2. INFORMATION COVERED BY THIS MANUAL

This manual consists of five sections as listed below:

Section 1 General Information, describes the instruments documented by this manual, it covers instrument description, options, accessories, specifications, and other basic information.

Section 2 Installation, provides information about initial inspection, preparation for use (including time base selection, and HP-IB address selection for remote operation), and storage and shipment.

Section 3 Operation, provides information for local and remote operation. This section also includes User Confidence Tests.

Section 4 Performance Tests, describes the procedures required to check the performance of the HP 8657B against the specifications listed in Table 1-1.

Section 5 Adjustments, describes the adjustment procedures required to enable the HP 8657B to meet the specifications listed in Table 1-1.

1-3. SPECIFICATIONS

HP 8657B specifications are listed in Table 1-1. These specifications are the performance standards or limits against which the HP 8657B may be tested. Supplemental characteristics are also listed in Table 1-1. Supplemental characteristics are not warranted specifications, but are typical characteristics included as additional information for the user.

1-4. SAFETY CONSIDERATIONS

This product is a Safety Class 1 instrument, that is, one provided with a protective earth terminal. The HP 8657B and all related documentation must be reviewed for familiarization with safety markings and instructions before operation. Refer to the Safety Considerations page found at the beginning of this manual for a summary of the safety information.

1-5. INSTRUMENTS COVERED BY THIS MANUAL

This instrument has a two-part serial number, in the form 0000U00000 OR 0000A00000. This is stamped on the serial number plate attached to the rear panel of the HP 8657B. The first four digits and the letter constitute the serial number prefix, and the last five digits form the suffix. The prefix is the same for all identical instruments. It changes only when a change is made to the instrument. The suffix is different for each instrument. The contents of this manual apply directly to instruments having the same serial number prefix(es) as listed under SERIAL NUMBERS on the title page.

Manual Updates. An instrument manufactured after the printing of this manual may have a serial prefix that is not listed on the title page. An unlisted serial prefix number indicates that the instrument differs in some way from those documented in this manual.

A **"MANUAL UPDATES"** packet is shipped with the manual, when necessary, to provide you with the most current information available at the time of shipment. These packets consist of replacement and addition pages which should be incorporated into the manual to bring it up to date.

Hewlett-Packard offers a **Documentation Update Service** that will provide you with further updates as they become available. If you operate or service instruments of different serial prefixes, we strongly recommend that you join this service immediately to ensure that your manual is kept current. For more information refer to the **Documentation Update Service** reply card included with this manual.

1-6. OPTIONS

The following options are available and may have been ordered and received with your HP 8657B.

Electrical Options

High Stability Timebase Option 001. A 10 MHz crystal reference for increased frequency accuracy and stability is installed. You can add Option 001 after you have received your HP 8657B by ordering HP part number 08657-61054.

Pulse Modulation Option 003. Adds Pulse Modulation to the HP 8657B. Option 003 fitted to a Standard or Option 001 HP 8657B, provides the Pulse Modulation input connector on the front panel. Option 003 fitted to an Option 002 HP 8657B, provides the connector on the rear panel along with the RF Output and AM/FM Modulation Input/Output connectors. For information about factory retrofitting Option 003 after you have received your HP 8657B, contact your nearest Hewlett-Packard sales office.

Mechanical Options

To add any of the mechanical options after you have received your HP 8657B, order the appropriate HP part number listed with each option.

Rear-Panel Inputs and Outputs Option 002. RF Output and AM/FM Modulation Input/Output connectors are located on the rear-panel. Order HP part number 08657-61055.

Front Handle Kit Option 907. Ease of handling is increased with the front-panel handles. Order HP part number 5062-3989.

Rack Flange Kit Option 908. This kit contains all necessary hardware and installation instructions for mounting the HP 8657B in a rack with 482.5 millimeter (standard 19-inch) spacing. Order HP part number 5062-3977.

Rack Flange and Front Handle Combination Kit Option 909. This kit is not simply a front handle kit and rack flange kit packaged together. The combination is made up of unique parts which include both functions. Order HP part number 5062-3983.

Documentation Options

Extra Manual Set Option 910. Provides an additional copy of the Operation and Calibration Manual and two copies of the Service Manual.

Add Service Manual Option 915. Provides a copy of the Service Manual. The Service Manual contains information to enable qualified service personnel to troubleshoot and repair the HP 8657B.

Warranty Option

Three-Year Extended Hardware Support Option W30. Provides 2 additional years of return-to-HP hardware service support (for 2nd and 3rd years).

1-7. ACCESSORIES SUPPLIED

The accessories supplied with the HP 8657B are:

- An appropriate power cord, see table 2-2 in Section 2.
- An Operating and Calibration Manual.
- A coaxial looping cable (Option 001 only).

1-8. ACCESSORIES AVAILABLE

The following accessories are available for use with the HP 8657B:

- 50Ω to 75Ω Adapter, HP model number 11687A (Frequency to 1.3 GHz only).
- Transit Case, HP part number 9211-2661.
- Slide Rack Mount Kits - see paragraph 2-17 for further information.

1-9. RECOMMENDED TEST EQUIPMENT

Table 1-2 lists the test equipment required for testing, adjusting, and servicing the HP 8657B. The Critical Specifications column describes the essential requirements for each piece of test equipment. Other equipment can be substituted if it meets or exceeds these critical specifications.

Table 1-4 lists alternate test equipment that can be used. Alternate models may be suggested for additional features that would make them a better choice in some applications. For example, some reasons for recommending an alternate model might be:

- HP-IB programmability,
- Multi-function capability (that is, one model can replace two or more single purpose models).

1-10. INSTRUMENT DESCRIPTION

The Hewlett-Packard Model 8657B is a synthesized signal generator with a carrier frequency range of 100 kHz to 2060 MHz. Its output amplitude is leveled and calibrated from +13 to −143.5 dBm. AM and/or FM functions can be individually selected. The carrier frequency, output amplitude, and modulation functions can be remotely programmed via the Hewlett-Packard Interface Bus. The unique modular design and incorporated service features permit rapid and easy calibration and service.

Carrier Frequency

The HP 8657B covers a carrier frequency range of 100 kHz to 2060 MHz (10 kHz with uncalibrated output and modulation). Frequency resolution is 1 Hz. A 10-digit LED display of the carrier frequency in MHz is provided. Pushbutton keys permit coarse tuning, fine tuning, and incrementing of the carrier frequency.

Frequency accuracy and stability are dependent on the reference source being used, either the internal 50 MHz reference oscillator or an external source that operates at 1, 5, or 10 MHz. With Option 001, a 10 MHz crystal reference is available for increased accuracy and stability.

Output Amplitude

The HP 8657B has precise power levels from +7 to −143.5 dBm (114 dB μV to 36.5 dB μV) with overrange to +17 dBm at decreased accuracy. The output amplitude from +3.5 to −127 dBm is accurate to less than ±0.5 dB from 100 kHz to 2060 MHz. Level flatness is less than ±1.0 dB with an output amplitude setting of 0.0 dBm. Output amplitude resolution is 0.1 dB. A 3½-digit LED display of output amplitude is provided with 7 LED annunciators used to display unit information.

Modulation Capabilities

The HP 8657B features a versatile internal and external modulation capability for AM and FM. This includes internal 400 Hz or 1 kHz tones; mixed modulation, such as AM/FM, AM/AM, or FM/FM; and the capability to accept low frequency digital unsquelching signals. A 3-digit display of AM depth or FM peak deviation is provided with 11 LED annunciators used to display internal or external modulation source information. Keyboard entries of AM depth up to 100% with a resolution of 1%, and FM peak deviation up to 400 kHz. The resolution of the FM peak deviation depends on the frequency of the carrier signal.

Option 003 adds the capabilty to generate Pulse Modulation using an external signal source.

Hewlett-Packard Interface Bus

The HP 8657B has an HP-IB interface and can be used with any HP-IB computing controller or computer for automatic system applications. The HP 8657B is fully programmable via the HP-IB. The HP 8657B's complete compatibility with HP-IB is defined by the following list of interface functions: SH0, E1, AH1, T0, L2, SR0, RL1, PP0, DC1, DT0, and C0. The Signal Generator interfaces with the bus via open collector TTL circuitry. An explanation of the compatibility codes can be found in the IEEE Standard 488 and the identical ANSI Standard MC1.1.

Table 1–1. Specifications (1 of 3)

SPECIFICATIONS describe the instruments warranted performance and apply after a 30 minute warm-up. All SPECIFICATIONS are valid over the signal generator's entire Operating/Environmental Range unless otherwise noted.

SUPPLEMENTAL CHARACTERISTICS (shown in italics) are intended to provide additional information useful in applying the instrument by giving typical (expected), but not warranted performance.

FREQUENCY

Range (10-digit LED display): 100 kHz to 2060 MHz.
Resolution: 1 Hz.
Switching Speed (to be within 1 dB of level and within 100 Hz of carrier frequency): <135 ms[7].
Accuracy and Stability: Same as time base used.

SUPPLEMENTAL CHARACTERISTICS

Frequency Underrange: *To 10 kHz with uncalibrated output and modulation.*
Phase Offset: *Output signal phase is adjustable in 1 degree increments.*

Timebase Characteristics:

	Standard	Option 001
Aging Rate	*± 2 ppm/year*	*1.0×10^{-9} /day after 45 days*
Temperature (0-55° C)	*± 10 ppm*	*7×10^{-9}*
Line Voltage	---	*2×10^{-9} (+5%,– 10%)*
Frequency	*50 MHz*	*10 MHz*
Timebase Reference Signal (Rear Panel)	*Available at a level of >0.15 Vrms into 50 Ω (Output of 10, 5, or 1 MHz is selectable via internal jumper). If external reference is used, output will the same frequency.*	
External Reference Input (Rear Panel)	*Accepts any 10, 5, or 1 MHz (±.002%) input frequency standard at a level >0.15 V_{rms} into 50 Ω.*	

SPECTRAL PURITY

Spurious Signals (≤ +7 dBm output levels)[1]:

Type of Spurious	Frequency (MHz)		
	0.1-1030	1030-1800	1800-2060
Harmonic	< –30 dBc	< –25 dBc	< –25 dBc
Sub-harmonic	None	< –40 dBc	< –35 dBc

Nonharmonic Spurious:

Carrier Frequency	Carrier Offset	
	>5 kHz (Typical)	>2 MHz
0.1 to 130	*< –63 dBc*	< –60 dBc
130 to 260	*< – 75 dBc*	< –60 dBc
260 to 520	*< – 66 dBc*	< –60 dBc
520 to 1030	*< – 63 dBc*	< –60 dBc
1030 to 2060	*< – 57 dBc*	< –54 dBc

Residual FM in Hz rms (in CW mode):

Post Detection Bandwidth	Frequency Range (MHz)				
	0.1-130	130-260	260-520	520-1040	1040-2060
0.3 - 3 kHz	<4 Hz	<1 Hz	<2 Hz	<3 Hz	<6 Hz
0.05 - 15 kHz	<6 Hz	<1.5 Hz	<3 Hz	<4 Hz	<8 Hz
Typical Residual FM:					
0.3 - 3 kHz	*<2 Hz*	*<0.5 Hz*	*<0.5 Hz*	*<1 Hz*	*<2 Hz*
0.3 - 3 kHz (CCITT)	*<1.25 Hz*	*<0.25 Hz*	*<0.25 Hz*	*<0.5 Hz*	*<1.0 Hz*
0.05 - 15 kHz	*<3 Hz*	*<1 Hz*	*<1 Hz*	*<1.5 Hz*	*<3 Hz*

Residual AM (50 Hz to 15 kHz post-detection noise bandwidth, in CW mode): <0.04% AM.

SSB Phase Noise (in CW Mode):

Carrier Frequency	SSB ϕ-Noise 20 kHz offset	*Typical 20 kHz offset*
0.1 to 130 MHz	< –124 dBc/Hz	*< – 130 dBc/Hz*
130 to 260 MHz	< –136 dBc/Hz	*< – 140 dBc/Hz*
260 to 520 MHz	< –130 dBc/Hz	*< – 136 dBc/Hz*
520 to 1040 MHz	< –124 dBc/Hz	*< – 130 dBc/Hz*
1040 to 2060 MHz	< –118 dBc/Hz	*< – 123 dBc/Hz*

SUPPLEMENTAL CHARACTERISTICS

Typical SSB Phase Noise

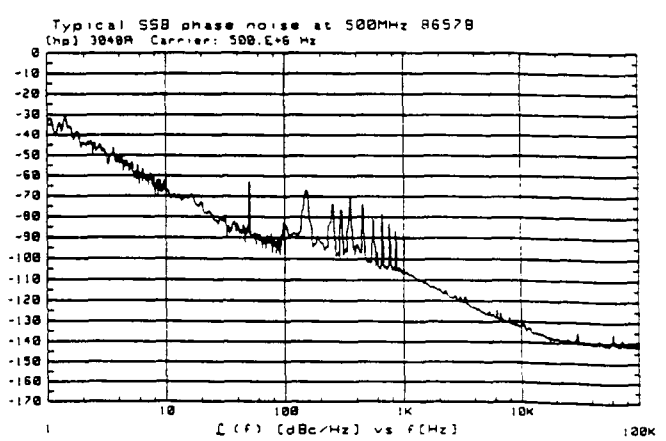

Table 1–1. Specifications (2 of 3)

OUTPUT

Level Range (3 1/2-digit LED display): +13 dBm to −143.5 dBm into 50 Ω[2].
Resolution: 0.1 dB.
Absolute Level Accuracy[3]:
<±1.0 dB (+3.5 to −127 dBm),
< ±1.5 dB (level > +3.5 dBm).
Level Flatness (100 kHz to 2060 MHz): ± 0.5 dB, output level setting of 0 dBm.
Reverse-Power Protection: Protects the signal generator from applications of up to 50 watts of RF power (from a 50 Ω source) to 2060 MHz into generator output; DC voltage cannot exceed 25 V.

SUPPLEMENTAL CHARACTERISTICS

Attenuator Repeatability: *0.01 dB*
Impedance: *50 Ω Nominal.*
Output Level Overrange: *To +17 dBm*
Absolute level Accuracy: *1.5 dB, output levels ≤ −127 dBm.*
SWR: *<1.5 for levels ≤−6.5 dBm.*
<2.0 for levels ≤ +13 dBm.

AMPLITUDE MODULATION

AM Depth (f_c >400 kHz[4]):
0 to 100%, level ≤ +7 dBm.
0 to 30%, level ≤ +10 dBm.

Resolution: 1%.
AM Rate Internal: 400 Hz and 1 kHz, ± 2%.
External: 20 Hz to 40 kHz (1 dB bandwidth)
20 Hz to 100 kHz (3 dB bandwidth) Typical.

AM Distortion (at 400 Hz and 1 kHz rates, levels ≤ +7 dBm):

AM Depth	f_c <1030	f_c >1030
0 to 30 % AM	1.5%	4%
31 to 70 % AM	3.0%	4%
71 to 90 % AM	4.0%	7%

Indicator Accuracy (for depths <90%, 400 Hz and 1 kHz rates and levels ≤+7 dBm): ±(6% of setting + 2%).
Incidental Phase Modulation (at 30% AM depth, internal rates): <0.3 radians peak.

FREQUENCY MODULATION

Maximum FM Peak Deviation:

Center Frequency	Maximum Peak Deviation	
	AC Mode (the lesser of)	DC Mode
0.1 to 130 MHz	200 kHz or 4000× rate (Hz)	200 kHz
130 to 260 MHz	50 kHz or 1000× rate (Hz)	50 kHz
260 to 520 MHz	100 kHz or 2000× rate (Hz)	100 kHz
520 to 1040 MHz	200 kHz or 4000× rate (Hz)	200 kHz
1040 to 2060 MHz	400 kHz or 8000× rate (Hz)	400 kHz
FM specified when peak deviation is > (f_c + 100 Hz)		

FM Setting Resolution:

FM Deviation	Carrier Frequency	
	f_c <1040 MHz	f_c >1040 MHz
<100 kHz	100 Hz	200 Hz
>100 kHz	1 kHz	2 kHz

FM Rate Internal: 400 Hz and 1 kHz, ±2%.
External: (referenced to 1 kHz)
dc/5 Hz to 100 kHz, 3 dB bandwidth.
dc/20 Hz to 50 kHz, 1 dB bandwidth.

Center Frequency Accuracy in dc Mode:

Carrier Frequency	Center Frequency Accuracy
0.1 to 130 MHz	± 500 Hz
130 to 260 MHz	± 125 Hz
260 to 520 MHz	± 250 Hz
520 to 1040 MHz	± 500 Hz
1040 to 2060 MHz	± 1000 Hz

Center Frequency Stability in dc Mode: <10 Hz per hour drift.
FM Distortion (at 400 Hz and 1 kHz rates).
<0.5% THD plus noise at deviations shown in the following table.

FM Distortion (at 400 Hz and 1 kHz rates):

Center Frequency	Deviation kHz
0.1 to 130 MHz	3 to 100 kHz
130 to 260 MHz	3 to 25 kHz
260 to 520 MHz	3 to 50 kHz
520 to 1040 MHz	3 to 100 kHz
1040 to 2060 MHz	6 to 200 kHz

Indicator Accuracy (400 Hz and 1 kHz): < 5% of setting
Incidental AM (peak dev. <20 kHz, 400 Hz and 1 kHz rates). <0.5% f_c > 1030 <0.1% AM, f_c >500 kHz.

Table 1–1. Specifications (1 of 3)

SPECIFICATIONS describe the instruments warranted performance and apply after a 30 minute warm-up. All SPECIFICATIONS are valid over the signal generator's entire Operating/Environmental Range unless otherwise noted.

SUPPLEMENTAL CHARACTERISTICS (shown in italics) are intended to provide additional information useful in applying the instrument by giving typical (expected), but not warranted performance.

FREQUENCY

Range (10-digit LED display): 100 kHz to 2060 MHz.
Resolution: 1 Hz.
Switching Speed (to be within 1 dB of level and within 100 Hz of carrier frequency): <135 ms.
Accuracy and Stability: Same as time base used.

SUPPLEMENTAL CHARACTERISTICS

Frequency Underrange: *To 10 kHz with uncalibrated output and modulation.*
Phase Offset: *Output signal phase is adjustable in 1 degree increments.*

Timebase Characteristics:

	Standard	Option 001
Aging Rate	*± 2 ppm/year*	*1.0×10^{-9} /day after 45 days*
Temperature (0-55° C)	*± 10 ppm*	*7×10^{-9}*
Line Voltage	---	*2×10^{-9} (+5%,−10%)*
Frequency	*50 MHz*	*10 MHz*
Timebase Reference Signal (Rear Panel)	*Available at a level of >0.15 Vrms into 50 Ω (Output of 10, 5, or 1 MHz is selectable via internal jumper). If external reference is used, output will the same frequency.*	
External Reference Input (Rear Panel)	*Accepts any 10, 5, or 1 MHz (±.002%) input frequency standard at a level >0.15 V_{rms} into 50 Ω.*	

SPECTRAL PURITY

Spurious Signals (≤ +7 dBm output levels)[1]:

Type of Spurious	Frequency (MHz)		
	0.1-1030	1030-1800	1800-2060
Harmonic	< −30 dBc	< −25 dBc	< −25 dBc
Sub-harmonic	None	< −40 dBc	< −35 dBc

Nonharmonic Spurious:

Carrier Frequency	Carrier Offset	
	>5 kHz (Typical)	>2 MHz
0.1 to 130	*< −63 dBc*	< −60 dBc
130 to 260	*< − 75 dBc*	< −60 dBc
260 to 520	*< − 66 dBc*	< −60 dBc
520 to 1030	*< − 63 dBc*	< −60 dBc
1030 to 2060	*< − 57 dBc*	< −54 dBc

Typical Line Related Spurious: *< −62 dBc, −75 dBc at offsets greater than 1 kHz.*

Residual FM in Hz rms (in CW mode):

Post Detection Bandwidth	Frequency Range (MHz)				
	0.1-130	130-260	260-520	520-1040	1040-2060
0.3 - 3 kHz	<4 Hz	<1 Hz	<2 Hz	<3 Hz	<6 Hz
0.05 - 15 kHz	<6 Hz	<1.5 Hz	<3 Hz	<4 Hz	<8 Hz
Typical Residual FM:					
0.3 - 3 kHz	*<2 Hz*	*<0.5 Hz*	*<0.5 Hz*	*<1 Hz*	*<2 Hz*
0.3 - 3 kHz (CCITT)	*<1.25 Hz*	*<0.25 Hz*	*<0.25 Hz*	*<0.5 Hz*	*<1.0 Hz*
0.05 - 15 kHz	*<3 Hz*	*<1 Hz*	*<1 Hz*	*<1.5 Hz*	*<3 Hz*

Residual AM (50 Hz to 15 kHz post-detection noise bandwidth, in CW mode): <0.04% AM.

SSB Phase Noise (in CW Mode):

Carrier Frequency	SSB ϕ-Noise 20 kHz offset	*Typical 20 kHz offset*
0.1 to 130 MHz	< −124 dBc/Hz	*< −130 dBc/Hz*
130 to 260 MHz	< −136 dBc/Hz	*< −140 dBc/Hz*
260 to 520 MHz	< −130 dBc/Hz	*< −136 dBc/Hz*
520 to 1040 MHz	< −124 dBc/Hz	*< −130 dBc/Hz*
1040 to 2060 MHz	< −118 dBc/Hz	*< −123 dBc/Hz*

SUPPLEMENTAL CHARACTERISTICS

Typical SSB Phase Noise

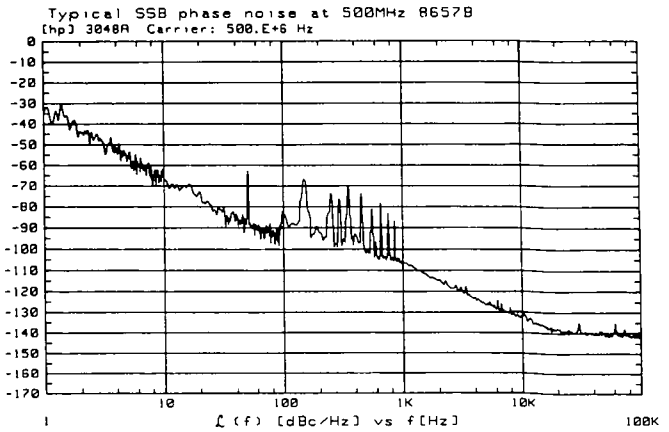

Table 1–1. Specifications (2 of 3)

OUTPUT

Level Range (3 1/2-digit LED display): +13 dBm to −143.5 dBm into 50 Ω[2].
Resolution: 0.1 dB.
Absolute Level Accuracy[3]:
<±1.0 dB (+3.5 to −127 dBm),
< ±1.5 dB (level > +3.5 dBm).
Level Flatness (100 kHz to 2060 MHz): ± 0.5 dB, output level setting of 0 dBm.
SWR: <1.5 for levels ≤−6.5 dBm.
<2.0 for levels ≤ +13 dBm.
Reverse-Power Protection: Protects the signal generator from applications of up to 50 watts of RF power (from a 50 Ω source) to 2060 MHz into generator output; DC voltage cannot exceed 25 V.

SUPPLEMENTAL CHARACTERISTICS

Attenuator Repeatability: *0.01 dB*
Impedance: *50 Ω Nominal.*
Output Level Overrange: *To +17 dBm*
Absolute level Accuracy: *1.5 dB, output levels ≤ −127 dBm.*

AMPLITUDE MODULATION

AM Depth (f_c >400 kHz[4]):
0 to 100%, level ≤ +7 dBm.
0 to 30%, level ≤ +10 dBm.

Resolution: 1%.
AM Rate Internal: 400 Hz and 1 kHz, ± 2%.
External: 20 Hz to 40 kHz (1 dB bandwidth)
20 Hz to 100 kHz (3 dB bandwidth) Typical.

AM Distortion (at 400 Hz and 1 kHz rates, levels ≤ +7 dBm):

AM Depth	f_c <1030	f_c >1030
0 to 30 % AM	1.5%	4%
31 to 70 % AM	3.0%	4%
71 to 90 % AM	4.0%	7%

Indicator Accuracy (for depths <90%, 400 Hz and 1 kHz rates and levels ≤+7 dBm): ±(2% of setting + 6%).
Incidental Phase Modulation (at 30% AM depth, internal rates): <0.3 radians peak.

FREQUENCY MODULATION

Maximum FM Peak Deviation:

Center Frequency	Maximum Peak Deviation	
	AC Mode (the lesser of)	DC Mode
0.1 to 130 MHz	200 kHz or 4000× rate (Hz)	200 kHz
130 to 260 MHz	50 kHz or 1000× rate (Hz)	50 kHz
260 to 520 MHz	100 kHz or 2000× rate (Hz)	100 kHz
520 to 1040 MHz	200 kHz or 4000× rate (Hz)	200 kHz
1040 to 2060 MHz	400 kHz or 8000× rate (Hz)	400 kHz
FM specified when peak deviation is > (f_c + 100 Hz)		

FM Setting Resolution:

FM Deviation	Carrier Frequency	
	f_c <1040 MHz	f_c >1040 MHz
<100 kHz	100 Hz	200 Hz
>100 kHz	1 kHz	2 kHz

FM Rate Internal: 400 Hz and 1 kHz, ±2%.
External: (referenced to 1 kHz)
dc/5 Hz to 100 kHz, 3 dB bandwidth.
dc/20 Hz to 50 kHz, 1 dB bandwidth.

Center Frequency Accuracy in dc Mode:

Carrier Frequency	Center Frequency Accuracy
0.1 to 130 MHz	± 500 Hz
130 to 260 MHz	± 125 Hz
260 to 520 MHz	± 250 Hz
520 to 1040 MHz	± 500 Hz
1040 to 2060 MHz	± 1000 Hz

Center Frequency Stability in dc Mode: <10 Hz per hour drift.
FM Distortion (at 400 Hz and 1 kHz rates).
<0.5% THD plus noise at deviations shown in the following table.

FM Distortion (at 400 Hz and 1 kHz rates):

Center Frequency	Deviation kHz
0.1 to 130 MHz	3 to 100 kHz
130 to 260 MHz	3 to 25 kHz
260 to 520 MHz	3 to 50 kHz
520 to 1040 MHz	3 to 100 kHz
1040 to 2060 MHz	6 to 200 kHz

Indicator Accuracy (400 Hz and 1 kHz): < 5% of setting
Incidental AM (peak dev. <20 kHz, 400 Hz and 1 kHz rates). <0.5% f_c > 1030 <0.1% AM, f_c >500 kHz.

Table 1–1. Specifications (3 of 3)

SUPPLEMENTAL CHARACTERISTICS

FM Distortion: Worst case distortion at all specified deviations, rates, and carrier frequencies is 1.5%.
External Sensitivity: 1 volt peak for indicated accuracy (1 volt dc when in dc-FM mode).
External Modulation Input: Front panel BNC, 600 Ω dc-coupled; front panel annunciators indicate 1 V peak signal ± 5%.
Modulating Signal Output: Internal modulating signal is provided at the front panel BNC connector at nominally 1 volt peak into a 600 Ω resistive load.
Simultaneous Modulation:
Internal/External: AM/FM, FM/AM, AM/AM, FM/FM, AM/FM/Pulse[5]

Long Term Carrier Stability in dc FM Mode.

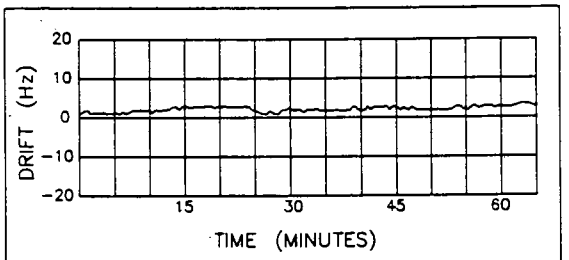

Long-term stability of HP 8657B in DC FM mode

PULSE MODULATION[5]

ON/OFF Ratio: >70 dB, $f_c \geq 130$ MHz.
>95 dB, $f_c \geq 1030$ MHz.
Rise/Fall Time: <35 nanoseconds, $f_c \leq 130$ MHz
<50 nanoseconds, $f_c \geq 1030$ MHz

Supplemental Characteristics:

Typical Rise/Fall Time: *10 ns, f_c < 1030 MHz;*
18 ns, f_c > 1030 MHz.
Maximum Repetition Rate: *DC – 30 MHz.*
Level Accuracy: *± 1.0dB absolute level accuracy in Pulse Mode.*
Duty Cycle: 0 – 100%. (limited by rise/fall time)
Pulse Modulation Input: *BNC, 50 ohms nominal or high impedance (internally selectable), can be driven directly by TTL.*
Maximum Input Level: *± 15 V.*
Nominal Input Threshold: *1.6 V.*
Video Feedthrough: *< 15%.*

Pulse Time Delay:[6]
Off to On: 47 nanoseconds
On to Off: 34 nanoseconds

REMOTE PROGRAMMING

Interface: HP-IB (Hewlett-Packard's implementation of IEEE Standard 488.
Interface Functions Implemented: SH0, AH1, T0, L2, SR0, RL1, PP0, DC1, DT0, C0, E1.

GENERAL

Operating Temperature Range: 0 to +55°C.
Storage Temperature Range: −55 to +75°C.
Leakage: Conducted and radiated interference is within the requirements of CE03 and RE02 of MIL STD 461B, except broadband conducted below 70 kHz and FTZ 1115. Furthermore, RF leakage of less than 1.0 uV is induced in a two-turn loop, 2.5 cm in diameter, held 2.5 cm away from the front surface. (Typical leakage <0.05 μV levels < −40 dBm.)
Save/Recall/Sequence Storage Registers: 100 non-volatile registers are available to save front panel settings.
Rear Panel SEQ Input Level: TTL low to recall next storage register contents.
Power Requirements: 100 or 120 or 220 or 240 volts (±10%) from 48 to 440 Hz; 200 VA maximum.
Weight: Net 19.5 kg (43 lb); shipping 25.0 kg (55 lb).
Dimensions: 133H × 425W × 574D mm
(5.25 × 16.75 × 22.6 inches.)
HP System II module size: 5 1/4H × 1MW × 17 D.

[1] Spurious specifications apply for output levels ≤ +4 dBm and f_c <1030 MHz when pulse modulation is installed.
[2] Maximum output power is +10 dBm with pulse modulation installed at f_c <1030 MHz.
[3] Absolute level accuracy includes allowances for detector linearity, temperature, flatness, attenuator accuracy and measurement uncertainty.
[4] When pulse modulation is installed, maximum specified output level in AM is reduced by 3 dB when f_c <1030 MHz.
[5] Pulse modulation specifications apply for carriers >130 MHz and levels ≤ +7 dBm (frequency switching speed typically increases by 30 ms with pulse modulation on). Additionally, AM is unspecified with pulse modulation turned on at f_c ≥1030 MHz.
[6] Time delay between a change in input pulse and carrier response.
[7] Add 25 ms to amplitude switching settling when switching to f_c <130 MHz.

Table 1–2. Recommended Test Equipment (1 of 3)

Instrument Type	Critical Specifications	Recommended Model	Use[1]
AM/FM Test Source (required for Measuring Receiver verification)	Range: 10 MHz Residual AM[2] FM Flatness: ±1% (dc to 250 kHz Peak Deviation: to 100 kHz	HP 11715A	P
Audio Source	Level: 0.0 to 1 Vpk into 50 and 600 ohms Frequency: 25 Hz to 40 kHz	HP 8903B	P, A, T
Controller, HP-IB	HP-IB compatibility as defined as IEEE Standard 488 and the identical ANSI Standard MC1.I: SHO, E1, AH1, T4, TEO, LO, LEO, SRO, RLO, PPO, DCO, DTO, and C1, 2, 3, 28.	Use any HP controller and HP-IB interface to implement HP-IB functional checks	T
DC Power Supply	Output: 0-1 V Current: 500 mA	HP 6214C	A
Digital Multimeter	Accuracy: 4 1/2 digit, ±0.05% of reading ±3 Ranges: 20 mV to 30 Vdc and 2 Vac Sensitivity: 100 μV	HP 3466A or HP 3455A (see Table 1-3)	P, A, T
Distortion Analyzer	Distortion Range: <0.1% Range: 20 Hz to 40 kHz	HP 8903B	P, T
Frequency Counter	Range: 1300 MHz Resolution: 1 Hz	HP 5328B Opt. 031	A, T
Pulse/Function Generator	Freq Range: 1 MHz to 50 MHz Function: Sine, Square, Pulse, etc. Output Level: 16 Vpp max into 600 ohms	HP 8116A	P
Function Generator	Frequency Range: 500 Hz Function: Square wave Output Level: 1 Vp into 600 ohms	HP 3312A	T
Loop Antenna	To ensure measurement accuracy, no substitution is possible. Fabrication depends upon machining and assembling to close tolerances.	HP 08640-60501	P
Measuring Receiver and Sensor Module	Frequency Range: 150 kHz to 1300 MHz Input Level: −127 to +13 dBm RF Power: 0.2 dB Tuned RF Level: 0.36 dB RSS Referenced to −10 dBm input	HP 8902A and 11722A (option 003 required for Residual FM Optional Performance Test)	P, A, T

[1] A = Adjustments; P = Performance Tests; T = Troubleshooting.

[2] The residual AM specification of both the HP 8902A Measuring Receiver and HP 11715A AM/FM Test Source are stated in a 50 Hz to 3 kHz bandwidth. In order to assure the validity of the residual AM measurement in the bandwidths stated for the HP 8657B Signal Generator (namely, 50 Hz to 15 kHz) the combined performance of both the HP 8902A and HP 11715A must be verified to be better than 0.022% rms for the 50 Hz to 15 kHz bandwidth.

Table 1–1. Specifications (3 of 3)

SUPPLEMENTAL CHARACTERISTICS

FM Distortion: Worst case distortion at all specified deviations, rates, and carrier frequencies is 1.5%.
External Sensitivity: 1 volt peak for indicated accuracy (1 volt dc when in dc-FM mode).
External Modulation Input: Front panel BNC, 600 Ω dc-coupled; front panel annunciators indicate 1 V peak signal ± 5%.
Modulating Signal Output: Internal modulating signal is provided at the front panel BNC connector at nominally 1 volt peak into a 600 Ω resistive load.
Simultaneous Modulation:
Internal/External: AM/FM, FM/AM, AM/AM, FM/FM, AM/FM/Pulse[5]

Long Term Carrier Stability in dc FM Mode.

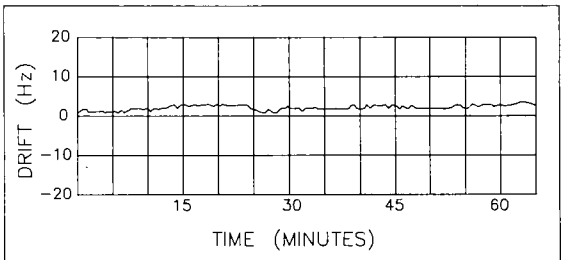

Long-term stability of HP 8657B in DC FM mode

PULSE MODULATION[5]

ON/OFF Ratio: >70 dB, below 1030 MHz.
>95 dB, above 1030 MHz.
Rise/Fall Time: <35 nanoseconds, f_c <1030 MHz
<50 nanoseconds, f_c ≥ 1030 MHz

Supplemental Characteristics:

Typical Rise/Fall Time: *10 ns, f_c <1030 MHz;*
18 ns, f_c > 1030 MHz.
Maximum Repetition Rate: *DC – 30 MHz.*
Level Accuracy: *± 1.0dB absolute level accuracy in Pulse Mode.*
Duty Cycle: 0 – 100%. (limited by rise/fall time)
Pulse Modulation Input: *BNC, 50 ohms nominal or high impedance (internally selectable), can be driven directly by TTL.*
Maximum Input Level: *± 15 V.*
Nominal Input Threshold: *1.6 V.*
Video Feedthrough: *<15%.*

Pulse Time Delay:[6]
Off to On: 47 nanoseconds
On to Off: 34 nanoseconds

REMOTE PROGRAMMING

Interface: HP-IB (Hewlett-Packard's implementation of IEEE Standard 488.
Interface Functions Implemented: SH0, AH1, T0, L2, SR0, RL1, PP0, DC1, DT0, C0, E1.

GENERAL

Operating Temperature Range: 0 to +55°C.
Storage Temperature Range: −55 to +75°C.
Leakage: Conducted and radiated interference is within the requirements of CE03 and RE02 of MIL STD 461B, except broadband conducted below 70 kHz and FTZ 1115. Furthermore, RF leakage of less than 1.0 uV is induced in a two-turn loop, 2.5 cm in diameter, held 2.5 cm away from the front surface. (Typical leakage <0.05 μV levels < −40 dBm.)
Save/Recall/Sequence Storage Registers: 100 non-volatile registers are available to save front panel settings.
Rear Panel SEQ Input Level: TTL low to recall next storage register contents.
Power Requirements: 100 or 120 or 220 or 240 volts (±10%) from 48 to 440 Hz; 200 VA maximum.
Weight: Net 19.5 kg (43 lb); shipping 25.0 kg (55 lb).
Dimensions: 133H × 425W × 574D mm
(5.25 × 16.75 × 22.6 inches.)
HP System II module size: 5 1/4H × 1MW × 17 D.

[1] Spurious specifications apply for output levels ≤ +4 dBm and f_c <1030 MHz when pulse modulation is installed.
[2] Maximum output power is +10 dBm with pulse modulation installed at f_c <1030 MHz.
[3] Absolute level accuracy includes allowances for detector linearity, temperature, flatness, attenuator accuracy and measurement uncertainty.
[4] When pulse modulation is installed, maximum specified output level in AM is reduced by 3 dB when f_c <1030 MHz.
[5] Pulse modulation specifications apply for carriers >130 MHz and levels ≤ +7 dBm (frequency switching speed typically increases by 30 ms with pulse modulation on). Additionally, AM is unspecified with pulse modulation turned on at f_c ≥1030 MHz.
[6] Time delay between a change in input pulse and carrier response.

Table 1–2. Recommended Test Equipment (1 of 3)

Instrument Type	Critical Specifications	Recommended Model	Use[1]
AM/FM Test Source (required for Measuring Receiver verification)	Range: 10 MHz Residual AM[2] FM Flatness: ±1% (dc to 250 kHz Peak Deviation: to 100 kHz	HP 11715A	P
Audio Source	Level: 0.0 to 1 Vpk into 50 and 600 ohms Frequency: 25 Hz to 40 kHz	HP 8903B	P, A, T
Controller, HP-IB	HP-IB compatibility as defined as IEEE Standard 488 and the identical ANSI Standard MC1.I: SHO, E1, AH1, T4, TEO, LO, LEO, SRO, RLO, PPO, DCO, DTO, and C1, 2, 3, 28.	Use any HP controller and HP-IB interface to implement HP-IB functional checks	T
DC Power Supply	Output: 0-1 V Current: 500 mA	HP 6214C	A
Digital Multimeter	Accuracy: 4 1/2 digit, ±0.05% of reading ±3 Ranges: 20 mV to 30 Vdc and 2 Vac Sensitivity: 100 μV	HP 3466A or HP 3455A (see Table 1-3)	P, A, T
Distortion Analyzer	Distortion Range: <0.1% Range: 20 Hz to 40 kHz	HP 8903B	P, T
Frequency Counter	Range: 1300 MHz Resolution: 1 Hz	HP 5328B Opt. 031	A, T
Pulse/Function Generator	Freq Range: 1 MHz to 50 MHz Function: Sine, Square, Pulse, etc. Output Level: 16 Vpp max into 600 ohms	HP 8116A	P
Function Generator	Frequency Range: 500 Hz Function: Square wave Output Level: 1 Vp into 600 ohms	HP 3312A	T
Loop Antenna	To ensure measurement accuracy, no substitution is possible. Fabrication depends upon machining and assembling to close tolerances.	HP 08640-60501	P
Measuring Receiver and Sensor Module	Frequency Range: 150 kHz to 1300 MHz Input Level: −127 to +13 dBm RF Power: 0.2 dB Tuned RF Level: 0.36 dB RSS Referenced to −10 dBm input	HP 8902A and 11722A (option 003 required for Residual FM Optional Performance Test)	P, A, T

[1] A = Adjustments; P = Performance Tests; T = Troubleshooting.

[2] The residual AM specification of both the HP 8902A Measuring Receiver and HP 11715A AM/FM Test Source are stated in a 50 Hz to 3 kHz bandwidth. In order to assure the validity of the residual AM measurement in the bandwidths stated for the HP 8657B Signal Generator (namely, 50 Hz to 15 kHz) the combined performance of both the HP 8902A and HP 11715A must be verified to be better than 0.022% rms for the 50 Hz to 15 kHz bandwidth.

Table 1–2. Recommended Test Equipment (2 of 3)

Instrument Type	Critical Specifications	Recommended Model	Use[3]
Measuring Receiver and Sensor Module (Cont'd)	Amplitude Modulation: Rates[4]: 25 Hz to 25 kHz Depth: to 99% Accuracy: Flatness: ±0.5% Demodulated Output Distortion:0.3% for 50% depth; <0.6% for 90% depth Incidental ΩM: <0.05 radians for 50% depth at 1 kHz rate (50 Hz to 3 kHz bandwidth) Residual AM[5] Frequency Modulation: Rates: 5 Hz to 100 kHz Deviation to 400 kHz Accuracy ±2% at 1 kHz Demodulated Output Distortion: <0.3% Incidental AM[5] Residual FM: <8 Hz rms at 1300 decreasing linearly with frequency to <1 Hz rms for 1000 MHz and below (50 Hz to 3 kHz bandwidth) Audio Distortion: Frequencies: 400 Hz and 1 kHz, ±5% Display Range: < 0.1% Accuracy: ±1 dB of reading	HP 8902A and 17722A ±2% at 1 kHz	P, A, T
Oscilloscope and Probes	Vertical Sensitivity: 100 mV/div Pods: 54002A 50 Ω input 54003A 1MΩ input and 10:1 probe 54003-61617 Bandwidth: 50 MHz Time Base: .05 μsec Input: Dual Channel	HP 54100A[6]	P, A, T

[3] A = Adjustments; P = Performance Tests; T = Troubleshooting.

[4] The incidental AM specification for the HP 8657B is not equivalent to the published specification of the HP 8902A Measuring Receiver. In order to assure the validity of the incidental AM measurement, the incidental AM of the modulation analyzer must be verified to be less than 0.002% for the 300 Hz to 20 kHz peak deviation at internal rates.

[5] The residual AM specification of both the HP 8902A Measuring Receiver and HP 11715A AM/FM Test Source are stated in a 50 Hz to 3 kHz bandwidth. In order to assure the validity of the residual AM measurement in the bandwidths stated for the HP 8657B Signal Generator (namely, 50 Hz to 15 kHz) the combined performance of both the HP 8902A and HP 11715A must be verified to be better than 0.022% rms for the 50 Hz to 15 kHz bandwidth.

[6] See Table 1-4 for an alternate oscilloscope listing.

Table 1–2. Recommended Test Equipment (3 of 3)

Instrument Type	Critical Specifications	Recommended Model	Use[7]
Phase Noise Measurement System	Frequency Range: 0.1to 1600 MHz Offset: 20 kHz Accuracy: ±2 dB Noise Floor: −145 dB	HP 3048A	P
Reference Source	Frequency: 0.1 to 1600 MHz Level: +13 dBm SSB Phase Noise (20 kHz offset): < −124 dBc/Hz, 0.1 to 130 MHz < −136 dBc/Hz, 130 to 260 MHz < −130 dBc/Hz, 260 tp 520 MHz < −124 dBc/Hz, 520 to 1040 MHz	HP 8657B or HP 8662A	P
Signal Source (optional)	Residual SSB phase noise in 1 Hz Bw (320 MHz $\leq f_c$ <640 MHz) with an offset from the carrier of: −100 dBc at 10 Hz, −121 dBc at 1 kHz, and −131 dBc at 10 kHz	HP 8662A (for Optional Residual FM Test)	P
Signature Analyzer	Provides preferred method for troubleshooting digital circuitry	HP 5005A	T
Spectrum Analyzer, RF	Frequency Range: 0.1 to 2060 MHz Resolution Bandwidth: <1 kHz to 3 kHz	HP 8562B or HP 8555A/8552B/141T	P, A, T
SWR Bridge	Frequency Range: 5 MHz to 2060 MHz Impedance: 50 ohms Directivity: >40 dB Test Connector: Type N male	Wiltron 60N50	P
Wideband Amplifier	Gain: 20 or greater Frequency Range: 10 MHz to 1300 MHz Impedance: 50 ohms Connector: Type N	HP 8447D Option 010	P
Termination	Frequency Range: 0.1 to 2060 MHz Termination: 50ohms SWR: <1.05	HP 908A	P

[7] A = Adjustments; P = Performance Tests; T = Troubleshooting.

Table 1–3. Recommended Accessories

Adapter/Cable	Quantity	Type	Recommended Model	Use[1]
Coaxial	1	BNC(f) to BNC(f)	HP 1250-0080	A, T
Coaxial	1	N(f) to BNC(m)	HP 1250-0077	A
Coaxial	3	N(m) to BNC(f)	HP 1250-0780	P, A, T
Probe	2	SMC(f) to RF Test Point	HP 1250-1598	A, T
RF	2	BNC(f) to SMC(f)	HP 08662-60075	P
RF	1	Connector: UG-21D/U Type N(m)	HP 11500A	P, A, T
RF	2	Connector: UG-21D/U Type N(m)	HP 11500B	P, A, T
RF	1	BNC to BANANA	HP 1100-60001	P
RF	2	BNC to BNC	HP 10503A or 8120-1840	P, A
PROBE	1	Alligator Clip to BNC	8120-1292	A

[1] A = Adjustments; P = Performance Tests; T = Troubleshooting.

Table 1–4. Alternate Test Equipment

Instrument	Recommended Model	Suggested Alternative	Advantages of Alternative
Digital Voltmeter (DVM)	HP 3466A	HP 3455A	HP-IB* Compatible
Oscilloscope	HP 54100A	HP 54110A	Availability

* HP-IB is Hewlett-Packard's implementation of IEEE Standard 488 and the identical ANSI Standard MC1.1

Section 2
INSTALLATION

2-1. INTRODUCTION

This section provides installation instructions for the the HP 8657B. Included is information regarding initial inspection, power requirements, line voltage and fuse selection, power cables, time base selection, HP-IB address selection, interconnection, mating connectors, operating environment, rack mounting, storage, and shipment.

2-2. INITIAL INSPECTION

WARNING

To avoid hazardous electrical shock, do not apply power to the HP 8657B when there are any signs of shipping damage to any part of the HP 8657B.

Inspect the shipping container for damage. If the shipping container or cushioning material is damaged, it should be kept until the contents of the shipment have been checked for completeness and the instrument has been checked mechanically and electrically. Procedures for checking electrical performance are given in Section 4. If the contents are incomplete, if there is mechanical damage or defect, or if the instrument does not pass the electrical performance test, notify the nearest Hewlett-Packard office. If the shipping container is damaged, or the cushioning material shows signs of stress, notify the carrier as well as the Hewlett-Packard office. Keep the shipping materials for the carrier's inspection.

2-3. INSTALLATION CHECK LIST

Before connecting the HP 8657B to the line (mains) voltage, ensure the following steps are taken:

1. Read the warning on page 2-2, see **PREPARATION FOR USE.**
2. Check the line (mains) voltage to ensure compatability with the HP 8657B's requirements, see **POWER REQUIREMENTS.**
3. Check that the voltage setting on the rear panel power line module is set to the correct voltage, see **LINE VOLTAGE SELECTION AND FUSE REPLACEMENT.**
4. Ensure that the rating of the line (mains) fuse is appropriate for the line voltage being used, see **TABLE 2-1.**
5. Ensure that the power cable is the correct type, see **POWER CABLES.**

2-4. PREPARATION FOR USE

WARNING

This is a Safety Class 1 product (i.e., provided with a protective earth terminal). An uninterruptible safety earth ground must be provided from the Mains power source to the product input wiring terminals, power cord, or supplied power cord set. Whenever it is likely that the protection has been impaired, the instrument must be made inoperative and be secured against any unintended operation.

If this instrument is to be energized via an external autotransformer for voltage reduction, make sure that the common terminal is connected to the earthed pole of the power source.

Before connecting the HP 8657B, the protective earth terminal of the HP 8657B must be connected to the protective conductor of the (Mains) power cord. The Mains plug shall only be inserted in a socket outlet provided with a protective earth contact. The protective action must not be negated by the use of an extension cord (power cable) without a protective conductor (grounding). Grounding one conductor of a two-conductor outlet is not sufficient protection.

2-5. POWER REQUIREMENTS

The HP 8657B requires a power source of 100, 120, 220 or 240 Vac, 48 to 440 Hz single phase. Power consumption is 200 VA maximum.

2-6. LINE VOLTAGE SELECTION AND FUSE REPLACEMENT

CAUTION

Before connecting the HP 8657B to the line (mains) voltage ensure that the correct operating voltage and fuse have been selected.

A rear-panel, line power module permits operation from 100, 120, 220, or 240 Vac. The number visible in the window (located on the module) indicates the nominal line voltage to which the instrument must be connected. Verify that the Line Voltage Selection Cam is matched to the power source. See Figure 2-1, Line Voltage Selection and Fuse Replacement. Table 2-1 lists the ratings and the HP part number of the line fuses.

NOTE

The line voltage and line fuse rating are selected at the factory according to the line voltage specified when the HP 8657B was ordered. If the voltage was not specified, the line voltage and line fuse rating are selected according to the country of destination.

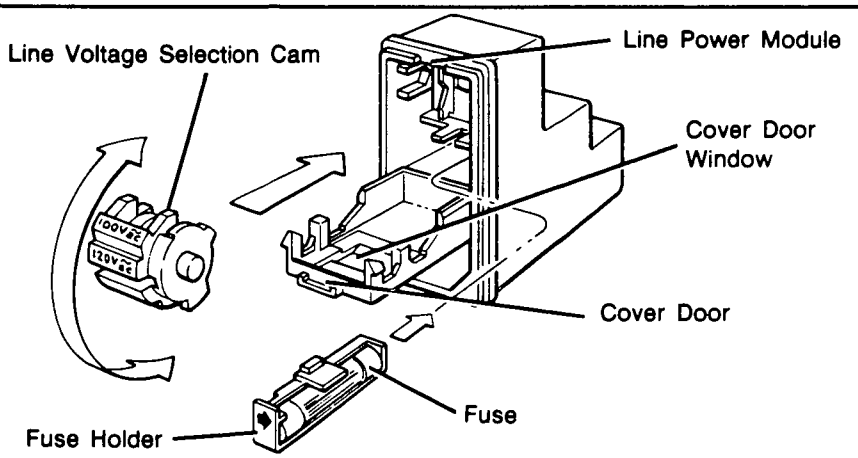

Line Voltage Selection

1. Open the Cover Door by placing a small standard screwdriver between the Cover Door and the Line Power Module, and pry open.
2. Remove the Line Voltage Selection Cam with fingers. Rotate cam so that the desired line voltage appears at the Cover Door Window when the cam is re-inserted.
3. Close the Cover Door by pressing it firmly.

Fuse Replacement

1. Open the Cover Door as described in step 1 for Line Voltage Selection.
2. Remove Fuse Holder with fingers. Replace Fuse in Fuse Holder and re-insert into the Line Power Module.
3. Close the Cover Door by pressing it firmly.

Figure 2–1. Line Voltage Selection and Fuse Replacement

WARNING

For protection against fire hazard, the line fuse should only be a 250V fuse with the correct current rating.

Table 2–1. Line Fuse Rating and HP Part Number

Line Voltage	Rating	Part Number
100, 120 Vac	2AT, 250V	2110-0303
220, 240 Vac	1.5AT, 250V	2110-0304

2-7. POWER CABLES

This instrument is equipped with a three-wire power cable. When connected to an appropriate ac power receptacle, this cable grounds the instrument cabinet. The type of Mains plug shipped with each instrument depends on the country of destination. Refer to Table 2-2 for the part numbers of the power cables and Mains plugs available.

Table 2–2. Power Cable and Mains Plug Part Numbers

Plug Type	Cable HP Part Number	C D	Plug Description	Cable Length (inches)	Cable Color	For Use In Country
250V	8120-1351 8120-1703	0 4	90°/STR BS1363A* 90°/90°	90 90	Mint Gray Mint Gray	United Kingdom, Cyprus, Nigeria, Rhodesia, Singapore
250V	8120-1369 8120-0696	0 4	STR/STR NZSS198/ASC112* STR/90°	79 80	Gray Gray	Austrailia, New Zealand
250V	8120-1689 8120-1692	7 2	STR/STR* STR/90°	79 79	Mint Gray Mint Gray	East and West Europe, Saudi Arabia, Egypt, (unpolarized in many nations)
125V	8120-1378 8120-1521 8120-1751	1 6 1	STR/STR NEMA5-15P* STR/90° STR/STR	80 80 90	Jade Gray Jade Gray Jade Gray	United States, Canada, Mexico, Phillipines, Taiwan U.S./Canada
100V (Same plug as above)	8120-4753 8120-4754	2 3	STR/STR STR/90°	90 90	Dark Gray Dark Gray	Japan only Japan only
250V	8120-2104 8120-2296 8120-3997	3 4 4	STR/STR SEV1011 1959-24507 Type 12 STR/90° STR/90°	79 79 177	Gray Gray Gray	Switzerland
250V	8120-0698	6	STR/STR NEMA6-15P	90	Black	United States, Canada
250V	8120-2956 8120-2957 8120-3997	3 4 4	90°/STR 90°/90° STR/STR	79	Gray	Denmark
250V	8120-4211 8120-4600	7 8	STR/STR*IEC83-B1 STR/90°	79 79	Black Gray	South Africa, India
250V	8120-1860 8120-1575 8120-2191 8120-4379	6 0 8 8	STR/STR*CEE22-V1 (Systems Cabinet Use) STR/STR STR/90° 90°/90°	59 31 59 80	Jade Gray Jade Gray Jade Gray Jade Gray	

* Part number shown for plug is industry identifier for plug only. Number shown for cable is HP Part Number for complete cable including plug. E = Earth Ground; L = Line; N = Neutral; STR = Straight

2-8. OPERATING ENVIRONMENT

The operating environment should be within the following limitations:

Temperature ..... 0° C to + 55° C
Humidity ..... < 95% relative at 40° C
Altitude ..... < 4570 meters (15,000 feet)

2-9. TIME BASE SELECTION

This section provides information about selecting the frequency of the time base output signal and selecting the frequency that can be used as an external reference time base.

The time base output signal, which is available at the rear panel TIME BASE OUTPUT connector, can be set for a frequency of 1, 5 or 10 MHz. When the HP 8657B is shipped, the time base output is set to 10 MHz. If you require a 1 or 5 MHz time base output, follow the procedure detailed below.

If you want to use an external time base reference, you can use a 1, 5, or 10 MHz signal. The external time base signal is connected to the TIME BASE INPUT connector on the rear panel. When the HP 8657B is shipped, it is set to accept a 10 MHz signal. If you want to use either a 1 or 5 MHz external time base signal, follow the procedure detailed below.

NOTE

When you select a timebase input or output frequency, the HP 8657B timebase output or timebase input, will be set for the same frequency.

a. Switch off the HP 8657B and remove the power cable.
b. Remove the four screws which secure the strap handle and handle caps. Remove the top cover.
c. Refer to Figure 2-2. Locate the A3 50 MHz Reference Oscillator. Using a 1/4 inch wrench (spanner), slacken the eight retaining nuts (2 per side) which secures the top cover. Then remove the top cover. Locate the time base selection link.
c. Unsolder the end of the selection link and resolder it in the appropriate position for the time base output or the external time base signal you require.
d. Reassemble the HP 8657B by reversing the procedure given in step b and then in step a.

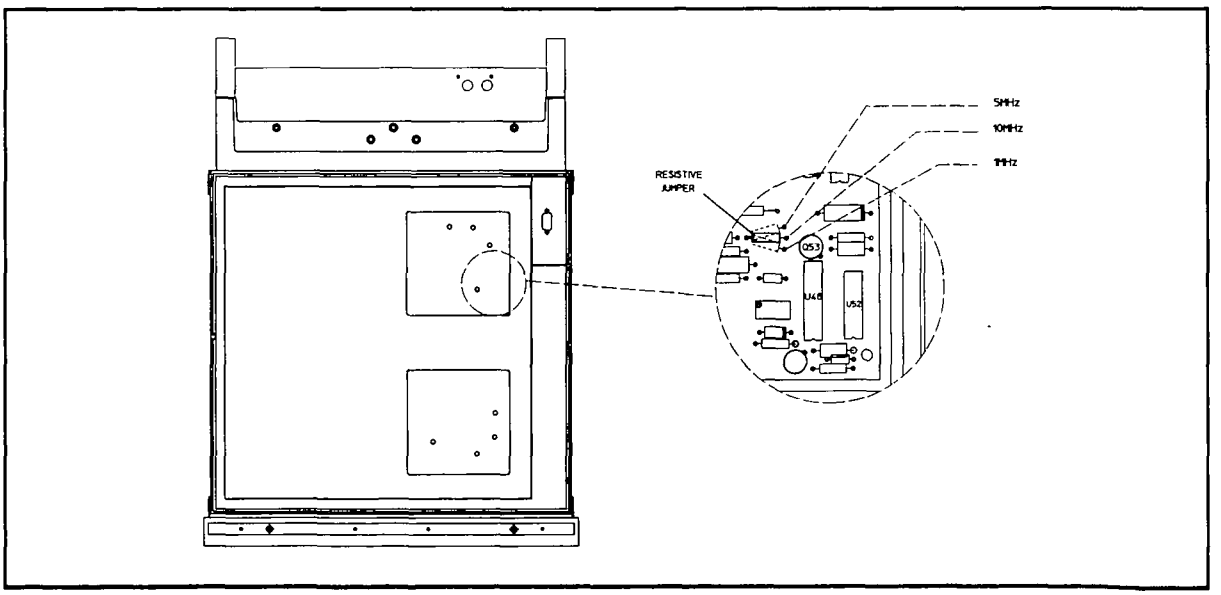

Figure 2–2. Time Base Jumper Location

2-10. HEWLETT-PACKARD INTERFACE BUS (HP-IB)

This section contains information about installing the HP 8657B into a Hewlett-Packard Interface Bus (HP-IB) System.

The HP-IB is Hewlett-Packard's implementation of the IEEE Standard 488-1978 (Digital Interface for Programmable Instrumentation). This standard defines a physical interface and protocol which enables the remote control of instrumentation systems.

2-11. HP-IB ADDRESS SELECTION

The HP-IB address of the HP 8657B is factory set to 07 (decimal). You can set the HP-IB address to any one of 31 valid addresses in the range 00 to 30 (decimal). If you want to set the HP-IB address to another value, use the following procedure.

NOTE

The HP-IB address must be set with the power removed from the HP 8657B.

a. Switch off the HP 8657B and remove the power cable.
b. Remove the four screws which secure the strap handle and handle caps. Remove the top cover.
c. Refer to Figure 2-3. Locate the HP-IB address switch S1 on the A13 Microprocessor assembly.
d. Using table 2-3 as a reference, set S1 to the HP-IB address you require. For example to set the HP-IB address to 03 (decimal), switch segments A1 and A2 would be set to open and switch segments A3, A4 and A5 would be set to closed.

CAUTION

Change only the switch segments marked A1 thru A5. The remaining switch segments are used to invoke built-in service utilities. Changing the position of these switch segments could prevent the HP 8657B from operating correctly.

e. Replace the bottom cover by reversing the procedure given in step b.
f. Plug in the HP 8657B and switch on.
g. To confirm the HP-IB address, press the SHIFT key, and hold the LOCAL key. The decimal HP-IB address is displayed in the MODULATION Display as long as the LOCAL key remains pressed.

2-12. CONNECTION TO THE HP-IB

The HP-IB connector on the rear panel, provides the interface to connect the HP 8657B into an HP-IB system. Refer to Figure 2-4 for information about the connector.

HP-IB Cables, The following HP-IB cables are available:

- HP 10833A (1m, 3.3ft)
- HP 10833B (2m, 6.6ft)
- HP 10833C (4m, 13.2ft)
- HP 10833D (0.5m, 1.6ft)

Cabling Restrictions, devices in an HP-IB system can be connected in any suitable arrangement (star, delta, etc). However the following cabling restrictions must be observed:

- The HP-IB system must contain no more than 2 metres (6.6 ft.) of connecting cable per device.
- The maximum accumulative length of connecting cable for the HP-IB system is 20 metres (65.6 ft.).

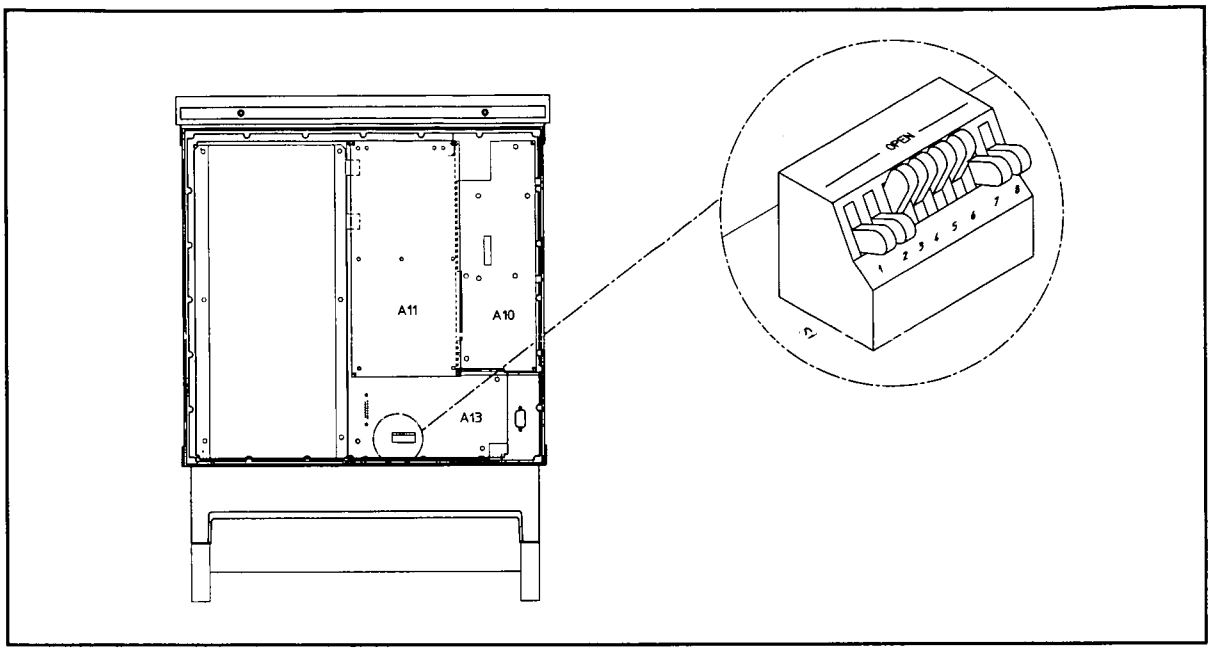

Figure 2–3. HP-IB Address Switch Location

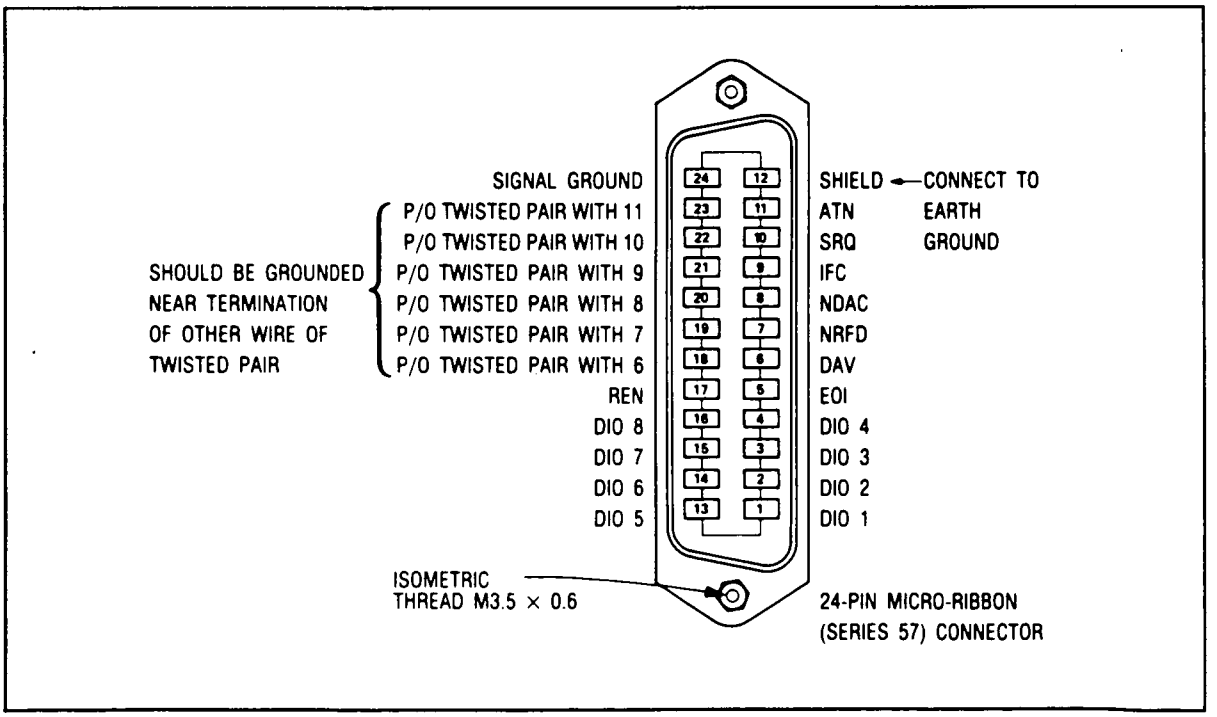

Figure 2–4. HP-IB (rear panel) connector

Table 2–3. HP-IB Address Codes

Address Switch					Equivalent ASCII Character (LISTEN)	Equivalent Decimal Value (LISTEN)
A5	A4	A3	A2	A1		
0	0	0	0	0	SP	00
0	0	0	0	1	!	01
0	0	0	1	0	"	02
0	0	0	1	1	#	03
0	0	1	0	0	$	04
0	0	1	0	1	%	05
0	0	1	1	0	&	06
0	0	1	1	1	'	07 (1)
0	1	0	0	0	(	08
0	1	0	0	1	)	09
0	1	0	1	0	*	10
0	1	0	1	1	+	11
0	1	1	0	0	,	12
0	1	1	0	1	–	13
0	1	1	1	0	.	14
0	1	1	1	1	/	15
1	0	0	0	0	0	16
1	0	0	0	1	1	17
1	0	0	1	0	2	18
1	0	0	1	1	3	19
1	0	1	0	0	4	20
1	0	1	0	1	5	21
1	0	1	1	0	6	22
1	0	1	1	1	7	23
1	1	0	0	0	8	24
1	1	0	0	1	9	25
1	1	0	1	0	:	26
1	1	0	1	1	;	27
1	1	1	0	0	<	28
1	1	1	0	1	=	29
1	1	1	1	0	>	30

(1) Factory-set address.

2-13. COAXIAL CONNECTORS.

Coaxial mating connectors used with the Signal Generator should be either 50-ohm BNC male connectors or 50-ohm Type N male connectors that are compatible with those specified in US MIL-C-39012.

2-14. TIMEBASE LOOPING CABLE (OPTION 001 ONLY)

The coaxial Timebase Looping cable, supplied with Option 001, should be connected between the HIGH STABILITY TIME BASE OUTPUT connector and the TIME BASE INPUT connector on the rear panel of the HP 8657B.

2-15. PULSE MODULATION INPUT IMPEDANCE (OPTION 003 OR 004 ONLY)

You can set the input impedance of the Pulse Modulation Input to 50 ohms or high impedance. The input impedance is set to high impedance when the HP 8657B is shipped. To change the input impedance use the following procedure:

a. Switch off the HP 8657B and remove the power cable.
b. Remove the four screws which secure the strap handle and handle caps. Remove the bottom cover.
c. Refer to Figure 2-5. Locate the selection link W1. When this is set to position 1, the input impedance is set to 50 ohms; when it is set to position 2, the input impedance is set to high impedance. Set W1 into the position you require.
d. Replace the bottom cover by reversing the procedure in step b.

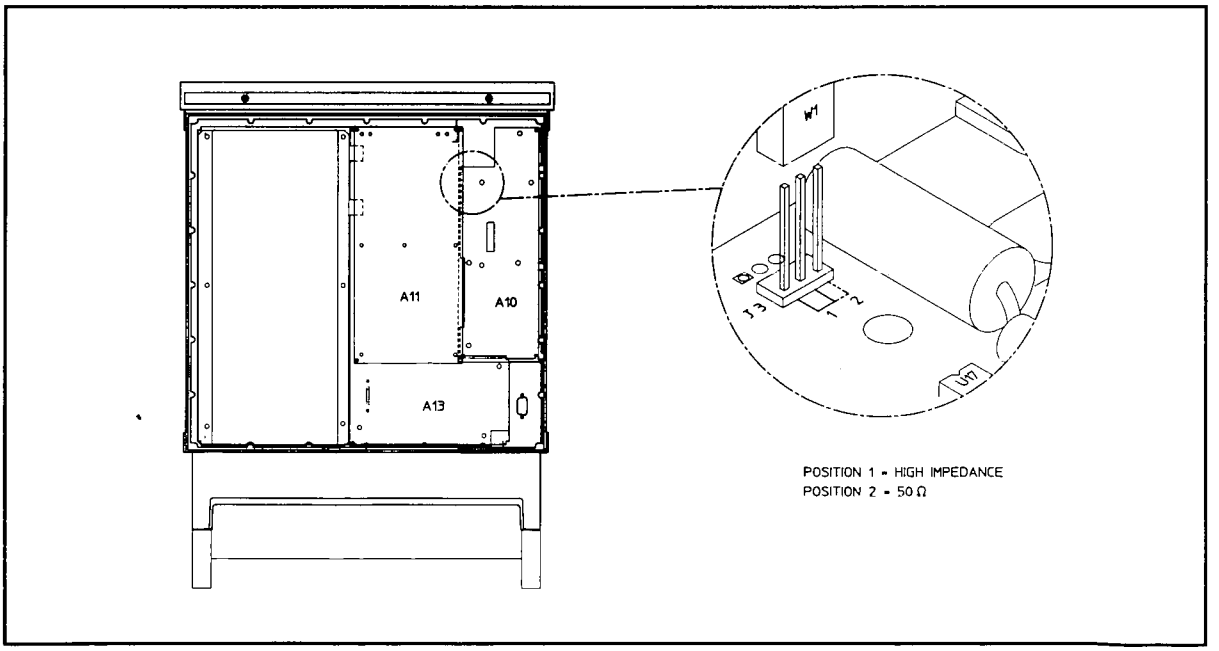

Figure 2–5. Pulse Modulation Input impedance selection

2-16. BENCH OPERATION

The instrument cabinet has plastic feet and foldaway tilt stands for convenience in bench operation. (The plastic feet are shaped to ensure self-alignment of instruments when they are stacked.) The tilt stands raise the front of the HP 8657B for easier viewing of the front-panel.

2-17. RACK MOUNTING

NOTE

The HP 8657B weighs 18.2 kg (40 lb); therefore, care must be exercised when lifting to avoid personal injury. Use equipment slides when rack mounting.

Rack mounting information is provided with the rack mounting kits. If a kit was not ordered with the HP 8657B as an option, it may be ordered through the nearest Hewlett-Packard office. Slide rack mount kits are discussed in the following paragraphs; refer to paragraph 1-6, Mechanical Options, in Section 1 for information and part numbers pertaining to other rack mount kits.

Slide rack mount kits allow the convenience of rack mounting with the flexibility of easy access. The slide kits for the HP 8657B are listed below.

Standard Slide Kit for HP rack enclosures ..... HP 1494-0060
Special Tilt Slide Kit for HP rack enclosures ..... HP 08656-82001
Slide Adapter Bracket Kit for Standard Slides (for non HP rack enclosures) .... HP 1494-0061

2-18. INTERNAL BATTERY

WARNING

This product uses a lithium battery which may explode if mishandled. DO NOT recharge or disassemble the battery, and do not dispose of it by burning. Check your local country regulatory requirements for the disposal of lithium batteries. When the battery needs replaced, use only the battery listed in Section 6 of the Service Manual.

The lithium battery on the A13 Processor board, which is used as a power supply for the non volatile memory, should be replaced at approximately 3 year intervals.

When the battery needs replaced, the HP 8657B will display **CLEARING** in the frequency window, at power on. Refer to the Service Manual for information about replacing the battery.

NOTE

You can still use all the features of the HP 8657B execpt for Storing and Recalling front-panel set-ups, when the battery needs replaced. However, it is recommended that you replace the battery as soon as the error occurs.

2-19. STORAGE AND SHIPMENT

Environment

The instrument should be stored in a clean, dry environment. The following environmental limitations apply to both storage and shipment.

Temperature	−55° C to + 75° C
Humidity	< 95% relative
Altitude	15,300 meters (50,000 feet)

Packaging

Original Packaging. Containers and materials identical to those used in factory packaging are available through Hewlett-Packard offices. If the instrument is being returned to Hewlett-Packard for servicing, attach a tag indicating the type of service required, return address, model number, and full serial number. Also, mark the container FRAGILE to assure careful handling. In any correspondence, refer to the instrument by model number and full serial number.

Other Packaging. The following general instructions should be used for repackaging with commercially available materials.

a. Wrap the instrument in heavy paper or plastic. (If shipping to a Hewlett-Packard office or service center, attach a tag indicating the type of service required, return address, model number, and full serial number.)
b. Use a strong shipping container. A double-wall carton made of 2.4 MPa (350 psi) test material is adequate.
c. Use enough shock-absorbing material (75 to 100 millimeter layer; 3 to 4 inches) around all sides of the instrument to provide a firm cushion and to prevent movement in the container. Protect the front-panel with cardboard.
d. Seal the shipping container securely.
e. Mark the shipping container FRAGILE to assure careful handling.

Section 3
OPERATION

3-1. INTRODUCTION

This section provides complete operating information for the HP 8657B. The information contained in this section is detailed below.

3-2. LOCAL OPERATION

Information covering front-panel operation of the HP 8657B is contained in two areas of this section.

Getting Started (refer to page 3-2). This section aims to get you ready to use the HP 8657B. It takes you through switch-on, introduces front and rear-panel features and provides simple procedures to demonstrate how easy the HP 8657B is to use.

Detailed Operating Instructions (refer to page 3-25). The detailed operating instructions provide comprehensive information about all of the HP 8657B functions and features. Table 3-8 is an index (in functional order) to the detailed operating instructions.

3-3. REMOTE OPERATION (HP-IB)

If you have a suitable controller, the HP 8657B can be operated remotely via the Hewlett-Packard Interface Bus (HP-IB). If you are not familiar with the HP-IB, you may want to refer to the document "Tutorial Description of the HP-IB", HP part number 5952-0156.

HP-IB information for the HP 8657B is contained in the following areas of this section:

a. General HP-IB information begins with paragraph 3-13.

b. A summary of HP-IB capabilities is provided in Table 3-7.

c. A summary of program codes is provided in Tables 3-4 and 3-5.

d. Detailed information relating to the HP 8657B HP-IB programmable features together with tables and examples of associated program codes, are provided in the detailed operating instructions at the end of this section.

3-4. USER CONFIDENCE TESTS

The User Confidence Tests provide procedures to allow you to check that the HP 8657B is operating correctly, in both local and remote modes. Refer to page 3-79.

3-5. GETTING STARTED

This section aims to get you ready to use the HP 8657B. It takes you through switch-on, introduces front and rear panel features and provides simple procedures to demonstrate how easy the HP 8657B is to use.

WARNING

Before the HP 8657B is switched on, all protective earth terminals, extension cords, autotransformers, and devices connected to it should be connected to a protective earth grounded socket. Any interruption of the protective earth grounding will cause a potential shock hazard that could result in personal injury or loss of life.

For continued protection against fire hazard, replace the line fuse only with a 250V fuse of the same rating. Do not use repaired fuses or short circuited fuseholders.

CAUTION

Before the HP 8657B is switched on, ensure that it is set to the same line voltage as the power source being used and that a corectly rated line fuse is fitted.

The HP 8657B is protected against reverse power applications up to 50 watts. However, for maximum protection of expensive internal components, ensure that you do not apply any reverse power to the RF OUTPUT connector.

3-6. SWITCH-ON

Switch-on the HP 8657B by pressing the POWER key. The HP 8657B automatically performs a self-test check at power on (this takes approximately 6 seconds). During this time all front panel indicators and displays will light.

When the self-test is complete, the HP 8657B is set to the same conditions as when it was last switched off.

NOTE

If the HP 8657B is switched off with RF ON/OFF set to OFF, then it will power-on with RF set to ON.

If any of the self-tests fail at power-on, an error code is diplayed in the FREQUENCY window (see page 3-10). The error code remains displayed until any front panel key is pressed.

3-7. FRONT PANEL FEATURES

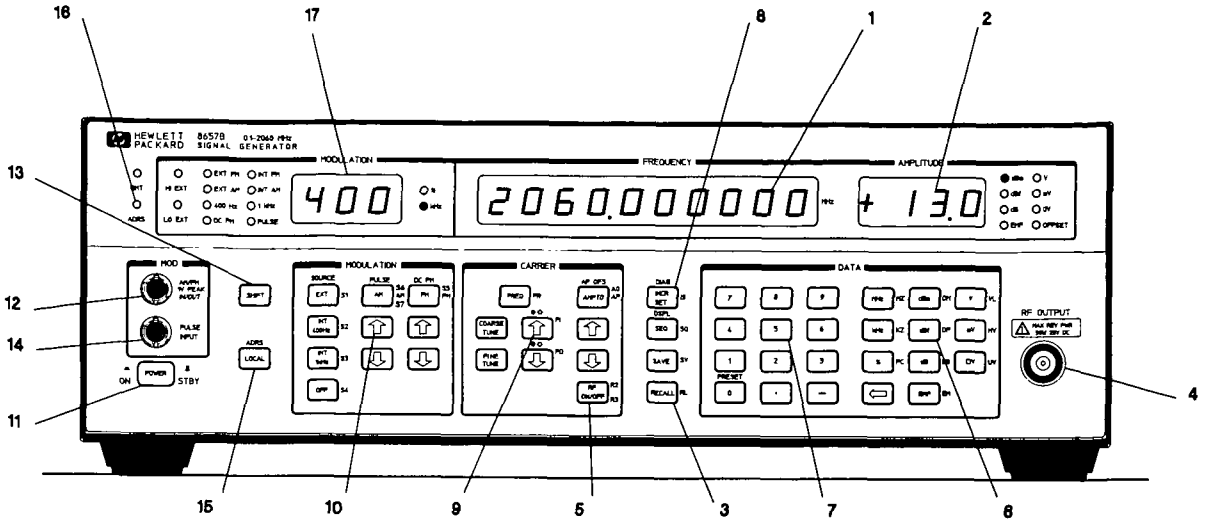

1. **FREQUENCY Display.** A 10-digit display of frequency or frequency increment in megahertz. Also used to display power-on error codes.

2. **AMPLITUDE Display.** A 3-digit display of RF output level or amplitude increment. Unit information is displayed by seven LED annunciators. Also used to display current position of the sequence counter and to indicate that a reverse-power condition has been detected (display flashes).

3. **SAVE, RECALL AND SEQuence Keys.** Used to save and recall a front-panel set-up to/from the HP 8657B Non-Volatile Memory (NVM). Up to 100 set-ups can be saved. The set-ups can be recalled in sequence (use the SEQ key or rear-panel SEQ connector), or a specific set-up can be recalled (use the RECALL key and the DATA keys).

4. **RF OUTPUT Connector.** Female, type-N connector provides an AC-coupled, reverse-power protected (up to 50W and 25 Vdc) RF output signal with a frequency range of 100 kHz to 2060 MHz and a leveled output of +7 dBm to −143.5 dBm. Nominal impedance is 50 ohms.

5. **RF ON/OFF Key.** Switches the RF OUTPUT off or on.

6. **Units Entry Key.** Used to terminate a data entry for AMPLITUDE, FREQUENCY, AM or FM. The backspace key (⇐) can be used to correct a data entry before the Units Entry Key is pressed.

7. **DATA Entry Keys.** Ten numeric entry keys, a decimal point key, and a minus sign key are used for FREQUENCY, AMPLITUDE, AM, FM, or increment value data entry. Numeric entry keys are also used in conjunction with the SAVE, RECALL and SEQ keys to save and recall front panel set-ups. The "0" key has a shifted function which presets the HP 8657B.

8. **INCR SET Key.** Used in conjuction with the function and data keys to set the stored value of the FREQUENCY, AMPLITUDE, AM, or FM increment. Also used to display the stored increment value for each of the four main functions and to access the diagnostics mode.

9. **CARRIER Keys.** Selects and permits tuning of the basic carrier functions including phase-up and phase-down.

10. **MODULATION Keys.** Used to select AM, FM, DC FM or Pulse Modulation. (Pulse Modulation is only available on Option 003 HP 8657B's). The modulation source can be selected for internal (400 Hz or 1 kHz) or for an external signal.

11. **POWER Switch.** Used to switch on and switch off the HP 8657B. If the HP 8657B is fitted with Option 001 High Stability Timebase, setting the power switch to STANDBY with the ac line connected, keeps the oscillator oven at a constant temperature.
12. **MOD INPUT/OUTPUT Connector.** Female, BNC connector accepts either an external modulation signal (1 Vpk) or a dc level (1 Vdc). In addition, it provides access to the 400 Hz or 1 kHz modulating signal from the internal audio oscillator. Nominal impedance is 600 ohms.
13. **SHIFT Key.** Selects the blue labeled function of the dual function keys.
14. **PULSE INPUT.** (Option 003 only). Female, BNC connector to connect the Pulse Modulation input signal. Nominal impedance is 50 ohms.
15. **LOCAL Key.** Returns the HP 8657B to local operation (full front-panel control), provided that local lockout is not on.
16. **Remote Annunciators.** Remote operation status is indicated by two LED annunciators. The RMT annunciator lights when the HP 8657B is in remote operation. The ADRS annunciator lights when the HP 8657B has been addressed to listen via the bus (regardless of whether or not the HP 8657B is in remote operation).
17. **MODULATION Display.** A 3-digit display of AM depth, FM peak deviation, or modulation increment. Internal and external modulation source information is displayed by 10 LED annunciators. It is also used to display the HP 8657B HP-IB address.

3-8. REAR PANEL FEATURES

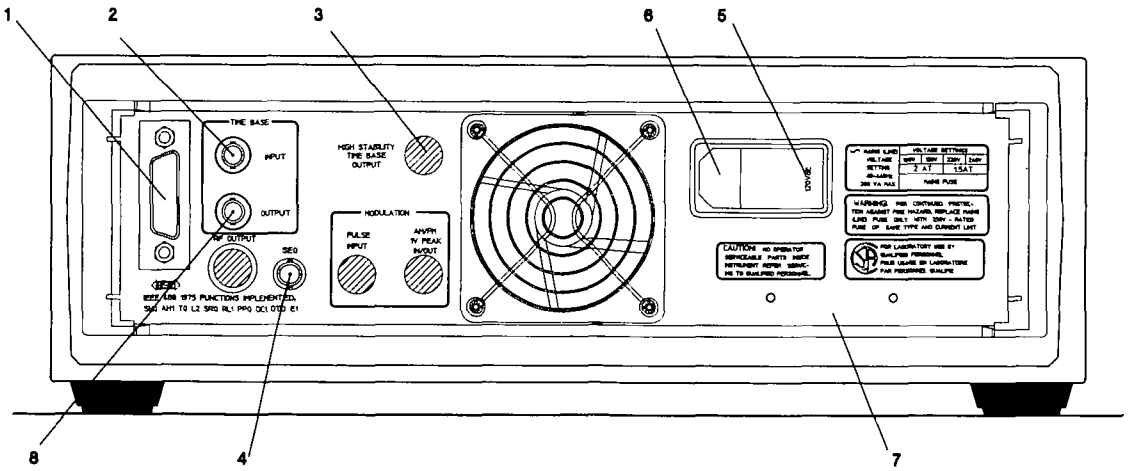

NOTE

On Option 002 HP 8657B's, the RF OUTPUT and MOD INPUT/OUTPUT connectors are located on the rear-panel.

On Option 002/003 HP 8657B's, the PULSE MODULATION, RF OUTPUT and MOD INPUT/OUTPUT connectors are located on the rear-panel.

1. **HP-IB Connector.** A 24-pin female connector is used to connect the HP 8657B to the Hewlett-Packard Interface Bus for remote operation. Connection information is provided in Section 2, Installation.
2. **TIME BASE INPUT.** Female BNC connector (J3) accepts an external 1, 5, or 10 MHz (±0.005%) time base reference input at a level of 0.2 to 0.4 Vrms into 50 ohms. An internal jumper must

be set in the appropriate position for the external time base signal being used (refer to Section 2, Installation).

3. **HIGH STABILITY TIMEBASE OUTPUT (OPTION 001 ONLY).** The High Stability Timebase Output must be connected to the TIME BASE INPUT, using the supplied looping cable. This increases the frequency accuracy and stability of the HP 8657B. The reference oscillator is kept at a stable operating temperature in the STBY (Standby) mode as long as the HP 8657B remains connected to the ac line.

4. **SEQ.** Female BNC connector (J5). Used with a contact closure device, such as a foot pedal or pushbutton switch, allows the sequential recall of up to 100 front-panel set-ups.

5. **Line Fuse.** Fuse selection and ordering information is provided in Section 2, Installation.

6. **Line Power Module.** Permits operation from 100, 120, 220, or 240 Vac. The number visible in the window indicates nominal line voltage to which the HP 8657B must be connected (see Figure 2-1). Center conductor is safety earth ground.

7. **Serial Number Plate.** First four digits and letter constitute the serial prefix which defines the HP 8657B configuration. The last five digits form a suffix that is unique to each HP 8657B. The plate also indicates any options supplied with the HP 8657B.

8. **TIME BASE OUTPUT.** Female BNC connector (J4) provides a 1, 5 or 10 MHz time base reference output at a level greater than 0.2 Vrms into 50 ohms. The signal is derived from the internal reference oscillator. An internal jumper must be set to select the required signal (refer to Section 2, Installation).

3-9. DEMONSTRATION 1 - SETTING THE FREQUENCY AND AMPLITUDE

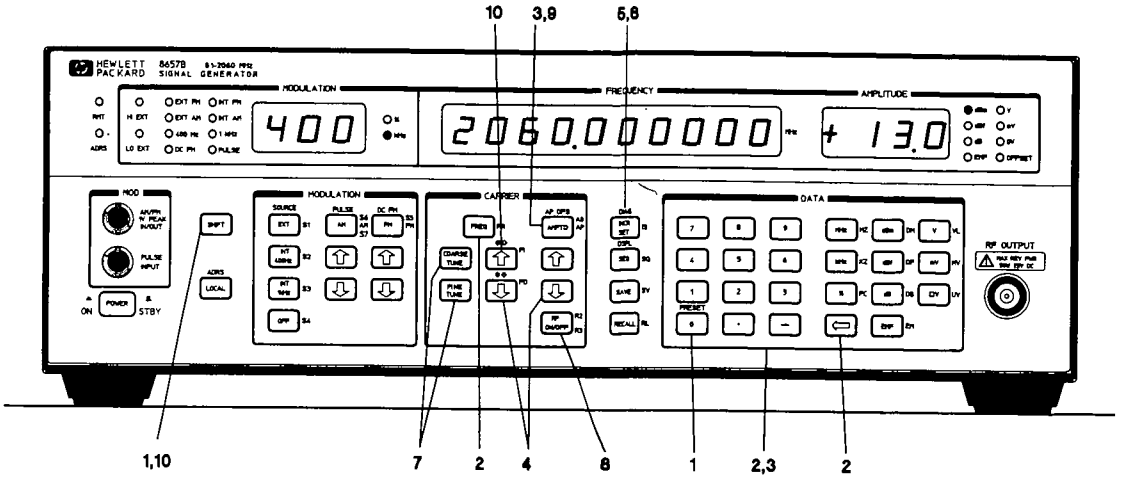

1. Press SHIFT and then PRESET. This sets the HP 8657B to its default conditions as listed below:

   Carrier Frequency and Amplitude: 100 MHz, −143.5 dBm
   Carrier Frequency Increment: 10 MHz
   Output Amplitude Increment: 10 dB
   Output Amplitude Offset: 0 dB
   AM Depth: 0%
   AM Depth Increment: 1%
   FM Peak Deviation: 0.0 kHz
   FM Peak Deviation Increment: 1 kHz
   Sequence Counter: Resets to 0

2. You change the CARRIER FREQUENCY by pressing the FREQ key (this selects the Frequency function). Use the DATA keys to select the frequency you require. If you select any incorrect data, use the ⇐ key to correct it. (The ⇐ key can only be used before the data is entered). You enter the frequency by pressing the kHz or Mhz key. Try setting the CARRIER FREQUENCY to 150 MHz.

NOTE

When the FREQUENCY, AMPLITUDE, AM or FM function has been selected, the function remains in effect until you select another function or you press the SAVE, RECALL, SEQ, DSPL or AP OFS key.

3. You change the CARRIER AMPLITUDE by pressing the AMPTD key, then you use the DATA keys to select the amplitude you require. (The − key can be pressed at any time before the data is entered). You enter the amplitude data by pressing an amplitude unit key or a valid combination of amplitude unit keys. The amplitude units you can select are:

dBm	dB μV	V	EMF mV
dBf	dB EMF V	mV	EMF μV
dBV	dB EMF mV	μV	
dBmV	dB EMF μV	EMF V	

   Try setting the CARRIER AMPLITUDE to -10 dBm. You can quickly convert between amplitude units. For example, to convert from dBm to dbμV, press the dB and μV keys.

4. You can change the CARRIER FREQUENCY or AMPLITUDE using the FREQ and AMPTD ⇑ and ⇓ keys. Pressing one of these keys, increases or decreases the frequency or amplitude by

the value of the stored increment. If you keep a key pressed, the associated function continues to change until you release the key.

NOTE

The ⇑ and ⇓ keys for each of the four main functions are always activated, you do not need to select the function before using them. Pressing an ⇑ or ⇓ key activates the related function for any future data entrys.

5. To change the value of an increment, press the associated function key, then the INCR SET key. Use the DATA keys to select the new value you want.
6. To check an increment setting, press the relevant function key and press and hold the INCR SET key. The increment is displayed in the appropriate window.

   Try selecting some new increment values then use the ⇑ and ⇓ keys to modify the carrier.
7. The COARSE and FINE TUNE keys allow you to quickly increase or decrease the default frequency increment in decade steps. When you press either key, the stored frequency increment is temporarily replaced by the default increment.

   Press and hold the COARSE or FINE TUNE key, the value of the default increment is indicated by a flashing display segment (this will be 10 MHz at switch on or after a PRESET). To increase the increment by a factor of ten, press the COARSE TUNE key (the next digit to the right flashes). To decrease the increment by a factor of ten, press the FINE TUNE key (the next digit on the left flashes). To revert to using the stored frequency increment, you press the INCR SET key. The next time you select this feature, the frequency increment value is set to the same value as when it was previously selected.
8. To switch off the RF OUTPUT press RF ON/OFF. The AMPLITUDE display is blanked and the amplitude units indicator goes off to indicate that the RF OUTPUT is off. To switch ON the RF output, press RF ON/OFF.
9. You can use the AMPLITUDE OFFSET function to correct the output level to compensate for losses in a test system due to cables, mixers, etc. To set an offset of +2 dB, press the SHIFT, AMPTD, 2 and dB keys (the OFFSET indicator lights). The carrier amplitude increases by +2 dB but the displayed amplitude does not change. To check the offset, press the SHIFT key, then press and hold the AMPTD key. The offset is displayed untill the AMPTD key is released.
10. To change the phase of the carrier output in 1 degree steps, with respect to the timebase signal, use the Φ ⇑ and Φ ⇓ keys. (The SHIFT key must be pressed each time before pressing the Φ ⇑ or Φ ⇓ key). Keeping either key pressed continues to change the phase in 1 degree steps.

3-10. DEMONSTRATION 2 - SETTING THE MODULATION

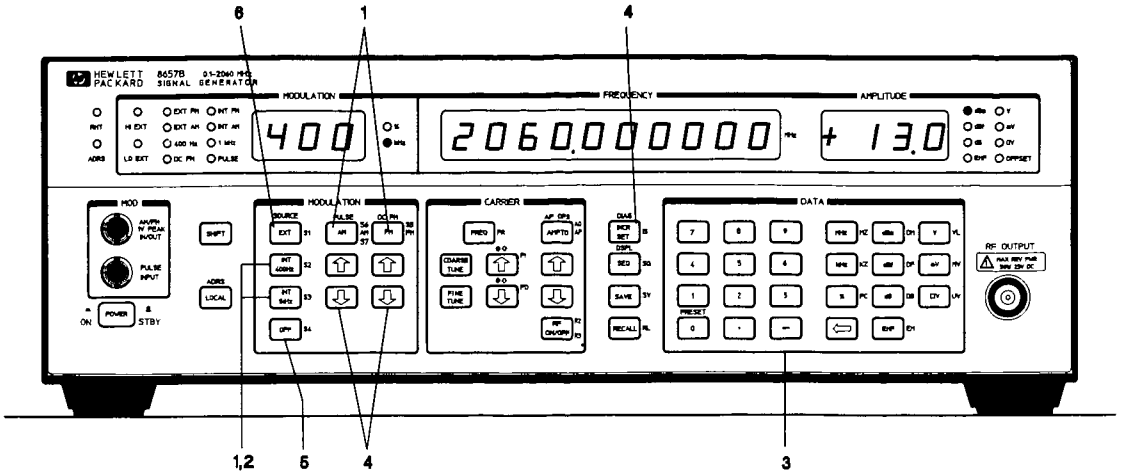

1. You select INTERNAL AM or FM modulation by pressing the AM or FM key (the INT AM or INT FM, 1 kHz and % or kHz indicators light). When you select Internal AM or FM, the modulation source is set to 1 kHz, unless you press the INT 400 Hz key before pressing the AM or FM key. The modulating signal is available at the MOD IN/OUT connector (level 1 Vpk).
2. To select the INTERNAL 400 Hz modulation source, press the INT 400 Hz key (the 400 Hz indicator lights). You can only select one internal source at a time.
3. You can modify the AM MODULATION DEPTH or FM PEAK DEVIATION, using the DATA keys or the AM and FM ⇑ and ⇓ keys. For example, to set an AM Modulation Depth of 75 % using the DATA keys, press the 7, 5 and % keys.
4. Press the AM⇑ key, the Modulation Depth increases by the value of the AM Modulation Depth increment (the default value is 1%). To change the increment, press the INCR SET key and then use the DATA keys to enter the new increment you require. To check the increment value press and hold the INCR SET key. (The FM⇑, FM⇓ and Increment keys operate the same as the AM keys).

NOTE

If you try and select an AM Modulation Depth that would cause the carrier peak envelope power to exceed +17 dBm, the entry is rejected.

If you try to select an FM Peak Deviation that is outside the limits for the carrier frequency, then the entry is rejected. If you select a carrier frequency that makes the currently selected FM Peak Deviation outside the HP 8657B's operating limits, then the Modulation Display flashes. To select the maximum permitted Peak Deviation for the carrier frequency, press the FM, FM⇑ or FM⇓ key.

5. To turn off the INTERNAL AM or FM, press the OFF key.
6. You can use an external modulation source to modulate the carrier. Press the EXT key before you select the modulation type you require. Connect your external modulation source to the MOD IN/OUT connector. Adjust the output level of the external source untill the HI EXT and LO EXT annunciators go off (the output level from the source will be approximately 1Vpk).

NOTE

If you select DC FM Modulation as the only external modulation type, the LO EXT indicator will remain on, regardless of the DC level being used (ensure that the input level does not exceed ±15 Vdc).

7. You can select mixed modulation types and sources. To select Internal and External FM, press FM then use the Data keys or FM⇑ and ⇓ keys to set the peak deviation you want. Press the EXT key then the FM key to select external FM.
8. To turn off one or more of the modulation types or sources when you have mixed modulation selected, press the function, source and the OFF key. For example, to switch off the External FM Modulation selected in step 6, press the FM, EXT and OFF keys. If you want to switch off the last modulation type you selected, press the OFF key only.

3-11. DEMONSTRATION 3 - SAVING AND RECALLING FRONT-PANEL SET-UPS

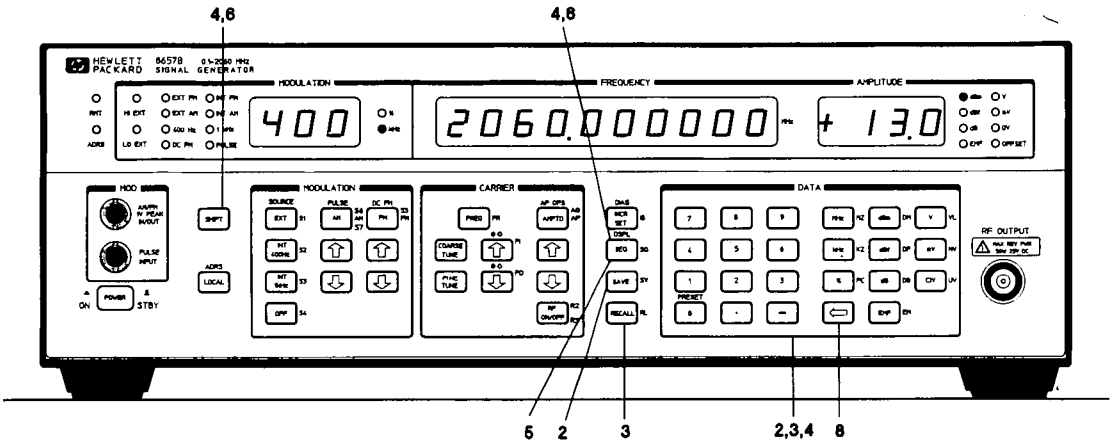

1. You can save up to 100 HP 8657B front-panel set-ups - all parameters except increment settings are saved. The set-ups are stored in Non Volatile Memory (this means when you switch off the HP 8657B the set-ups are not lost). The set-ups can be recalled in sequence or a specific set-up can be recalled.
2. To save a front panel set-up, press the SAVE key and then two DATA keys to identify the memory location of the set-up. You can allocate any number between 00 and 99 to identify the set-up. Try saving some of your own set-ups.
3. To recall a specific set-up, press the RECALL key then the appropriate DATA keys.
4. To review a set-up you have saved, without changing the current set-up, press the SHIFT, DSPL and then the appropriate DATA keys (press and hold the second data key)
5. There are two ways to recall a sequence of set-ups; using the SEQ key or the rear-panel SEQ connector. RECALL the set up-you want the sequence to begin with. Press the SEQ key. The next set up in the sequence is recalled.

NOTE

To use the sequence feature the set-ups must be allocated consecutive memory locations when they are saved.

6. To check the current position of the sequence, press the SHIFT then the DSPL key. Press and hold the SEQ key. The current sequence position is displayed in the AMPLITUDE display.
7. To use the SEQ connector to recall a sequence, you need to connect a contact closure device, such as foot switch. Each time the switch is closed, the next set-up in the sequence is recalled.
8. If you need to delete your set-ups from memory, press and hold the ⇐ key when you switch on the HP 8657B. The FREQUENCY display will show CLEARING to confirm that the memory is being cleared.

3-12. ERROR CODES

Error Code	Description
CLEARING	NVM battery needs replaced, refer to Section 2
ERROR XXXX	Hardware error, refer to Service Manual for more information.

3-13. REMOTE OPERATION, HEWLETT-PACKARD INTERFACE BUS

The HP 8657B can be operated through the Hewlett-Packard Interface Bus (HP-IB). Bus compatibility, programming, and data formats are described in the following paragraphs.

All front-panel functions (except for DSPL, DSPL in conjunction with SEQ, display Amplitude Offset, Backspace (⇐), COARSE TUNE, FINE TUNE, clearing the NVM and displaying the HP-IB address) are programmable through HP-IB.

A quick check of the HP 8657B HP-IB input/output capability is described in paragraph 3-19, HP-IB Functional Checks. These checks can be used to verify that the HP 8657B responds correctly to the HP-IB messages described in Table 3-7.

HP-IB Compatibility

The HP 8657B has an open-collector, TTL, HP-IB interface. The HP 8657B can be used with any HP-IB computing controller or computer for automatic system applications. The HP 8657B is fully programmable via the HP-IB The HP 8657B programming capability is described by the 13 HP-IB messages listed in Table 3-7. Foremost among these messages is the Data message. Data messages contain the program codes that control the HP 8657B output signal. The HP 8657B's complete compatibility with HP-IB is further defined by the following list of interface functions: SH0, E1, AH1, T0, L2, SR0, RL1, PP0, DC1, DT0, and C0. A more detailed explanation of these compatibility codes can be found in the IEEE Standard 488 (and the identical ANSI Standard MC1.1). For more information about HP-IB, refer to the Hewlett-Packard Electronic Instruments and Systems catalog and the booklet titled "Tutorial Description of the HP-IB" (HP part number 5952-0156).

Remote Operation

Remote Capability. In remote operation, the front-panel keys are disabled (except for the POWER switch and the LOCAL key). The HP 8657B can only be addressed to listen. When addressed to listen, the HP 8657B responds to the following messages: Data, Clear, Remote, Local, Local Lockout, Clear Lockout/Set Local, and Abort. Each is discussed in detail further on in this section.

Local-to-Remote Change. The HP 8657B switches to remote operation when the Remote message is received. The Remote message is comprised of two parts. They are:

- Remote Enable bus control line (REN) set true.
- Device listen address received once (while REN is true).

The HP 8657B RMT and ADRS annunciators will both light, and its output signal and all preselected functions remain unchanged when the local-to-remote transition occurs.

Local Operation

Local Capability. In local operation, the HP 8657B front-panel is fully operational, and will respond to the Remote message. Whether addressed or not, the HP 8657B also responds to the Clear, Local Lockout, Clear Lockout/Set Local, and Abort messages. It will not, however, respond to the Data message unless it has been previously addressed.

Remote-to-Local Change. The HP 8657B returns to local operation when the Local message (GTL) or Clear Lockout/Set Local message is received. The Clear Lockout/Set Local message sets the Remote Enable bus control line (REN) false. The HP 8657B can always be set to local operation by pressing the front-panel LOCAL key, provided that local lockout is not set. The output signal remains unchanged, and all preselected functions remain unchanged when the remote-to-local transition occurs.

Local Lockout. When a data transmission is interrupted, which can happen if the HP 8657B is returned to local operation by pressing the LOCAL key, the data could be lost. This would leave the HP 8657B in an unknown state. To prevent this, a local lockout is recommended. Local lockout disables the LOCAL key and allows return-to-local only under program control.

NOTE

Return-to-local can also be accomplished by setting the POWER switch to STBY, and then back to ON. This technique, however, has some potential disadvantages.

It defeats the purpose and advantage of local lockout, since the system controller will lose control of the HP 8657B.

Some HP-IB conditions are reset to their default state during turn on.

Addressing

The HP 8657B interprets the byte of information on its eight data input/output bus lines as either an address or a bus command. Whenever the bus is in the command entry mode, the Attention bus control line (ATN) is true and the Interface Clear bus control line (IFC) is false. Whenever the HP 8657B is being addressed (whether in local or remote operation), the front-panel ADRS annunciator will light.

The HP 8657B listen address is set by an internal switch. The address selection procedure is described in Section 2, Installation. The decimal equivalent of the listen address can be displayed in the MODULATION Display by pressing the SHIFT key first and then pressing and holding the LOCAL key. Refer to Table 3-1 for a list of the valid decimal (listen address) values and their equivalent ASCII characters.

Table 3–1. Valid Decimal Values vs. Equivalent ASCII Characters

Equivalent Decimal Value (Listen)	Equivalent ASCII Character (Listen)	Equivalent Decimal Value (Listen)	Equivalent ASCII Character (Listen)
00	SP	16	0
01	!	17	1
02	"	18	2
03	#	19	3
04	$	20	4
05	%	21	5
06	&	22	6
07(1)	'	23	7
08	(	24	8
09	)	25	9
10	*	26	:
11	+	27	;
12	,	28	<
13	–	29	=
14	.	30	>
15	/		

(1) Factory-set address.

Data Messages

The HP 8657B communicates on the interface bus with Data messages. Each Data message consists of one or more bytes of information sent over the eight data input/output bus lines DIO1 through DIO8 during the data entry mode. The data entry mode is established when the Attention bus control line (ATN) is false. Data messages include the program codes listed in Tables 3-4 and 3-5. These program codes contain the necessary information to program virtually all of the HP 8657B functions available in local operation. The only exceptions are DSPL, DSPL in conjunction with SEQ, display Amplitude Offset, Backspace, COARSE TUNE, FINE TUNE, and display HP-IB ADRS.

Receiving the Data Message

The HP 8657B must be in remote operation and addressed to listen before it can respond to Data messages. The HP 8657B remains addressed to listen until it receives an Abort message or a universal unlisten command from the controller.

The paragraph entitled Switching Characteristics, shows how the HP 8657B responds to Data Messages. Timing considerations and other characteristics pertinent to operation are included.

Data Message Input Format. Data messages contain the controller's talk address, the HP 8657B listen address, a string of program codes, and an End of String message (EOS). The string of program codes follows the same protocol as a front-panel keystroke sequence in local operation. The EOS message can be a Line Feed (LF), a bus END message (EOI and ATN bus control lines both set true), or an internally produced EOS.

The following paragraphs explain other key elements of the program code strings. Figure 3-1 provides some examples of Data messages.

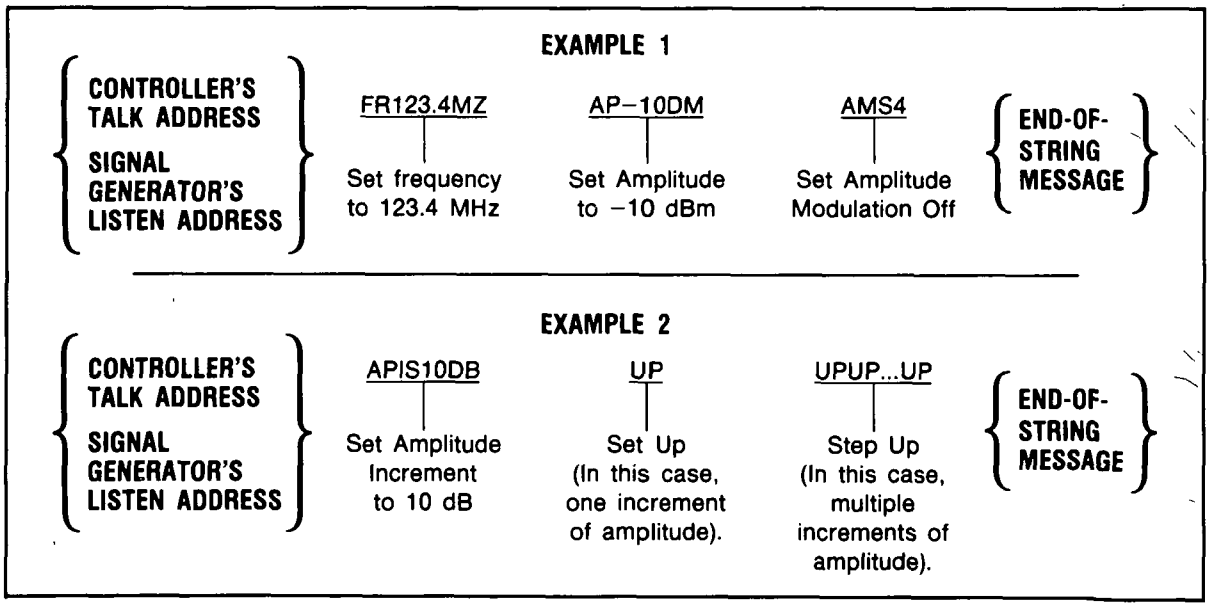

Figure 3–1. Data Message Example.

NOTE

After any function terminator (UNITS entry) is sent to the HP 8657B, the HP 8657B is unable to respond to the interface bus until the microprocessor has completed execution of the particular task. Any attempt to send data to the HP 8657B delays bus operation until the execution is complete. The normal terminators carriage-return, and line-feed are considered further data. Data cannot be sent on the bus until the HP 8657B has processed the carriage-return, and line-feed. The bus is free, however, for communication between controller and other equipment. It is recommended that the carriage-return, and line-feed be omitted from data messages sent to the HP 8657B by using a semicolon after the function terminator.

Keyboard-to-Program Code Correlation. There is a program code that corresponds to nearly every front-panel key. The exceptions are DSPL, DSPL in conjunction with SEQ, display Amplitude Offset, Backspace, COARSE TUNE, FINE TUNE, and display HP-IB ADRS. In addition, the program code HZ is available for carrier frequency entries, RP is available to reset the reverse power protection circuitry after the source of reverse power has been removed, and R0 and R1 are available to place the HP 8657B in the STBY and ON states, respectively.

Value-Selectable Parameters. Carrier parameters are set using a Function-Data-Units sequence of program codes, while modulation parameters are set using a Source-Function-Data-Units sequence of program codes. Single-value parameters; such as, INT 400 Hz, INT 1 kHz, and so forth, are set with a single program code sequence.

Data. The term "Data" in each program sequence refers to the numeric value and not to the entire Data message. Data can be any number of arbitrary length in fixed point notation. Digits that exceed the maximum data length for the particular function will be truncated. This maximum limit includes any embedded decimal points. In the case of the Amplitude function, this maximum limit also includes the minus sign. The minus sign is only applicable during Amplitude Data entries. Table 3-2 summarizes these input data restrictions. A complete list of ASCII characters with conversions to binary, octal, decimal, and hexadecimal is provided in Table 3-6.

Table 3–2. Input Data Restrictions

Function	Maximum Data Length	Decimal Point Allowed	Minus Sign Allowed
Frequency	10 Digits	Yes	No
Amplitude	9 Digits (1)	Yes	Yes
AM	3 Digits	Yes	No
FM	3 Digits	Yes	No
Increment Set	Same as for selected function	Yes	No

NOTES:
1. In the Amplitude function, leading zeros are not counted.
2. Unused or unidentifiable characters are ignored.
3. Either upper or lower case letters can be used in Data messages.
4. Only the following ASCII characters are recognized by the HP 8657B:
   A-Z a-z 0-9 LF – . %
   All other characters, including spaces, are ignored.

Sending the Data Message

The HP 8657B does not have the capability to talk; therefore, it cannot send Data messages.

Receiving the Trigger Message

The HP 8657B does not have the capability to respond to the trigger message.

Receiving the Clear Message

The HP 8657B responds to a Clear message by setting each function parameter to the value listed in Table 3-3. The HP 8657B responds equally to the Selected Device Clear (SDC) bus command when addressed to listen, and to the Device Clear (DCL) bus command whether addressed or not.

Table 3–3. Response to Clear Message.

Parameter	Value
Carrier Frequency	100.00000 MHz
Output Amplitude	−143.5 dBm
AM Depth	0%
FM Peak Deviation	0.0 kHz
Carrier Frequency Increment	10.00000 MHz
Output Amplitude Increment	10.0 dB
AM Depth Increment	1%
FM Peak Deviation Increment	1.0 kHz
Coarse and Fine Tune Pointer	10.00000 MHz
Sequence Counter	0
100 Saved Set Ups	Remain unchanged

Receiving the Remote Message

The Remote message is comprised of two parts. First, the Remote Enable bus control line (REN) is held true, then the device listen address is sent by the controller. These two actions combine to place the HP 8657B into remote operation. Therefore, the HP 8657B is enabled to go into remote operation when the controller begins the Remote message, but it does not actually make the transition until it is addressed to listen for the first time. All HP 8657B settings remain unchanged when the transition from local-to-remote operation occurs. The front-panel RMT and ADRS annunciators will both light once the HP 8657B has received the Remote message and is addressed to listen.

Receiving the Local Message

The Local message is the means by which the controller sends the Go to Local (GTL) bus command. If addressed to listen, the HP 8657B returns to local operation (full front-panel control) when it receives the Local message. If the HP 8657B is in local lockout when the Local message is received, full front-panel control is returned, but local lockout remains in effect. Unless the HP 8657B receives the Clear Lockout/Set Local message, it returns to local lockout the next time it receives a Remote message. All HP 8657B settings remain unchanged when the transition from remote-to-local operation occurs.

The front-panel RMT annunciator turns off when the HP 8657B switches to local operation. However, the front-panel ADRS annunciator remains lit if the HP 8657B is still being addressed to listen (whether in remote or local operation).

The front-panel LOCAL key can also be used to return the HP 8657B to local operation. However, pressing the LOCAL key (when the HP 8657B is not in local lockout) might interrupt a Data message

being sent to the HP 8657B. This would leave the HP 8657B in a state unknown to the controller. This situation is undesirable and can be avoided by sending the Local Lockout message to disable the LOCAL key.

Receiving the Local Lockout Message

The Local Lockout message is the means by which the controller sends the Local Lockout (LLO) bus command. If the HP 8657B is in remote operation, it responds to the Local Lockout message by disabling the front-panel LOCAL key. Local lockout prevents the loss of data or system control due to someone accidentally pressing any of the front-panel keys. If the HP 8657B is in local operation when it is enabled to remote operation (that is, REN is set true) and it receives the Local Lockout message, it switches to remote with local lockout operation the first time it is addressed to listen. Once in local lockout, the HP 8657B can only be returned to local operation by the controller or by unplugging or switching the HP 8657B to STBY and then back to ON.

Receiving the Clear Lockout/Set Local Message

The Clear Lockout/Set Local message is the means by which the controller sets the Remote Enable bus control line (REN) false. The HP 8657B returns to local operation (full front-panel control) when it receives the Clear Lockout/Set Local message. All HP 8657B settings remain unchanged when the transition from remote with lockout to local operation occurs.

The front-panel RMT annunciator is turned off when the HP 8657B switches to local operation.

Receiving the Pass Control Message

The HP 8657B does not respond to the Pass Control message because it cannot act as a controller.

Sending the Require Service Message

The HP 8657B does not have the capability to require service by setting the Service Request bus control line (SRQ) true.

Sending the Status Byte Message

The HP 8657B does not have the capability to respond to a Serial Poll Enable (SPE) bus command; therefore, it cannot send the Status Byte message.

Sending the Status Bit Message

The HP 8657B does not have the capability to respond to a Parallel Poll Enable (PPE) bus command; therefore, it cannot send the Status Bit message.

Receiving the Abort Message

The Abort message is the means by which the controller sets the Interface Clear bus control line (IFC) true. When the Abort message is received, the HP 8657B becomes unaddressed and stops listening.

Table 3–4. HP-IB Program Codes (Alphabetical Order)

Program Code[1]	Parameter	Comments
AM	Amplitude Modulation	Function Entry
AO	Amplitude Offset	Function Entry
AP	Amplitude (carrier)	Function Entry
DB	dB	Units Entry
DF	dBf	Units Entry
DM	dBm	Units Entry
DN	Step Down (!)	Function Feature
EM	EMF	Units Entry
FM	Frequency Modulation	Function Entry
FR	Frequency (carrier)	Function Entry
HZ	Hz	Units Entry
IS	Increment Set	Function Qualifier
KZ	kHz	Units Entry
MV	mV	Units Entry
MZ	MHz	Units Entry
PC	Percent [2]	Units Entry
PD	Phase Decrement	Function Feature
PI	Phase Increment	Function Feature
PM	Pulse Modulation [5]	Function Entry
PF	Pulse Modulation (Fast Mode) [5]	Function Entry
RC	Recall (0-9)[6]	Feature
RL	Recall (0-99)	Feature
RP	Reverse Power Protection Reset [3]	Feature
R0	Standby [4]	Feature
R1	On[4]	Feature
R2	RF OFF	Function Feature
R3	RF ON	Function Feature
SQ	Sequence	Feature
ST	Save (0-9)[6]	Feature
SV	Save (0-99)	Feature
S1	External Modulation Source	Source Qualifier
S2	Internal 400 Hz Modulation Source	Source Qualifier
S3	Internal 1 kHz Modulation Source	Source Qualifier
S4	Modulation Source Off	Source Qualifier
S5	DC FM	Function Entry
UP	Step Up (k)	Function Feature
UV	lV	Units Entry
VL	Volts	Units Entry
0-9	Numerals 0-9	Data Entries
–	Minus Sign	Data Entry
.	Decimal Point	Data Entry
%	Percent[2]	Units Entry

[1] Program codes can be either upper or lower case.
[2] Either PC or % can be used.
[3] The source of reverse power must be removed.
[4] The POWER switch must be set to the ON position.
[5] You can select 2 modes for Pulse Modulation. See Page 3-22.
[6] Use these codes if you need compatability with the HP 8656B.

Table 3–5. HP-IB Program Codes (Functional Order)

Parameter	Program Code[1]		Parameter	Program Code[1]
Frequency			Units (Cont'd)	
Frequency (carrier)	FR		EMF	EM
			Volts	VL
Amplitude			mV	MV
Amplitude (carrier)	AP		μV	UV
Amplitude Offset	AO		Hz	HZ
			kHz	KZ
Modulation			MHz	MZ
Amplitude Modulation	AM		Percent[2]	PC
Frequency Modulation	FM		Percent[2]	%
External Modulation Source	S1			
Internal 400 Hz Modulation Source	S2		**Other**	
Internal 1 kHz Modulation Source	S3		Step Up (⇧)	UP
Modulation Source Off	S4		Step Down (⇩)	DN
DC FM	S5		Increment Set	IS
Pulse Modulation	PM[5]		Phase Increment	PI
Pulse Modulation (Fast Mode)	PF[5]		Phase Decrement	PD
			Standby[3]	R0
Data			On[3]	R1
Numerals 0-9	0-9		RF OFF	R2
Minus Sign	–		RF ON	R3
Decimal Point	.		Save (0-9)[6]	ST
			Recall (0-9)[6]	RC
Units			Save (0-99)	SV
dB	DB		Recall (0-99)	RL
dBf	DF		Sequence	SEQ
dBm	DM		Reverse Power Protection Reset[4]	RP

[1] Program codes can be either upper or lower case.
[2] Either PC or % can be used.
[3] The POWER switch must be in the ON position.
[4] The source of reverse power must be removed.
[5] There are two modes you can select for Pulse Modulation. Refer to Page 3-22 for information before using Pulse Modulation.
[6] Use these codes if you need compatability with the HP 8656B

Table 3–6. Commonly Used Code Conversions

ASCII	Binary	Octal	Decimal	Hexadecimal
NUL	00 000 000	000	0	00
SOH	00 000 001	001	1	01
STX	00 000 010	002	2	02
ETX	00 000 011	003	3	03
EOT	00 000 100	004	4	04
ENQ	00 000 101	005	5	05
ACK	00 000 110	006	6	06
BEL	00 000 111	007	7	07
BS	00 001 000	010	8	08
HT	00 001 001	011	9	09
LF	00 001 010	012	10	0A
VT	00 001 011	013	11	0B
FF	00 001 100	014	12	0C
CR	00 001 101	015	13	0D
SO	00 001 110	016	14	0E
SI	00 001 111	017	15	0F
DLE	00 010 000	020	16	10
DC1	00 010 001	021	17	11
DC2	00 010 010	022	18	12
DC3	00 010 011	023	19	13
DC4	00 010 100	024	20	14
NAK	00 010 101	025	21	15
SYN	00 010 110	026	22	16
ETB	00 010 111	027	23	17
CAN	00 011 000	030	24	18
EM	00 011 001	031	25	19
SUB	00 011 010	032	26	1A
ESC	00 011 011	033	27	1B
FS	00 011 100	034	28	1C
GS	00 011 101	035	29	1D
RS	00 011 110	036	30	1E
US	00 011 111	037	31	1F
SP	00 100 000	040	32	20
!	00 100 001	041	33	21
"	00 100 010	042	34	22
#	00 100 011	043	35	23
$	00 100 100	044	36	24
%	00 100 101	045	37	25
&	00 100 110	046	38	26
'	00 100 111	047	39	27
(	00 101 000	050	40	28
)	00 101 001	051	41	29
*	00 101 010	052	42	2A
+	00 101 011	053	43	2B
,	00 101 100	054	44	2C
–	00 101 101	055	45	2D
.	00 101 110	056	46	2E
/	00 101 111	057	47	2F
0	00 110 000	060	48	30
1	00 110 001	061	49	31
2	00 110 010	062	50	32
3	00 110 011	063	51	33
4	00 110 100	064	52	34
5	00 110 101	065	53	35
6	00 110 110	066	54	36
7	00 110 111	067	55	37
8	00 111 000	070	56	38
9	00 111 001	071	57	39
:	00 111 010	072	58	3A
;	00 111 011	073	59	3B
<	00 111 100	074	60	3C
=	00 111 101	075	61	3D
>	00 111 110	076	62	3E
?	00 111 111	077	63	3F

ASCII	Binary	Octal	Decimal	Hexadecimal
@	01 000 000	100	64	40
A	01 000 001	101	65	41
B	01 000 010	102	66	42
C	01 000 011	103	67	43
D	01 000 100	104	68	44
E	01 000 101	105	69	45
F	01 000 110	106	70	46
G	01 000 111	107	71	47
H	01 001 000	110	72	48
I	01 001 001	111	73	49
J	01 001 010	112	74	4A
K	01 001 011	113	75	4B
L	01 001 100	114	76	4C
M	01 001 101	115	77	4D
N	01 001 110	116	78	4E
O	01 001 111	117	79	4F
P	01 010 000	120	80	50
Q	01 010 001	121	81	51
R	01 010 010	122	82	52
S	01 010 011	123	83	53
T	01 010 100	124	84	54
U	01 010 101	125	85	55
V	01 010 110	126	86	56
W	01 010 111	127	87	57
X	01 011 000	130	88	58
Y	01 011 001	131	89	59
Z	01 011 010	132	90	5A
[	01 011 011	133	91	5B
\	01 011 100	134	92	5C
]	01 011 101	135	93	5D
^	01 011 110	136	94	5E
_	01 011 111	137	95	5F
`	01 100 000	140	96	60
a	01 100 001	141	97	61
b	01 100 010	142	98	62
c	01 100 011	143	99	63
d	01 100 100	144	100	64
e	01 100 101	145	101	65
f	01 100 110	146	102	66
g	01 100 111	147	103	67
h	01 101 000	150	104	68
i	01 101 001	151	105	69
j	01 101 010	152	106	6A
k	01 101 011	153	107	6B
l	01 101 100	154	108	6C
m	01 101 101	155	109	6D
n	01 101 110	156	110	6E
o	01 101 111	157	111	6F
p	01 110 000	160	112	70
q	01 110 001	161	113	71
r	01 110 010	162	114	72
s	01 110 011	163	115	73
t	01 110 100	164	116	74
u	01 110 101	165	117	75
v	01 110 110	166	118	76
w	01 110 111	167	119	77
x	01 111 000	170	120	78
y	01 111 001	171	121	79
z	01 111 010	172	122	7A
{	01 111 011	173	123	7B
|	01 111 100	174	124	7C
}	01 111 101	175	125	7D
~	01 111 110	176	126	7E
DEL	01 111 111	177	127	7F

Table 3–7. HP-IB Message Reference Table

HP-IB Capability	Applicable	Response	Related Commands and Controls*	Interface Functions*
Data	Yes	All Front-Panel functions, except for DSPL, DSPL in conjunction with SEQ, display Amplitude Offset, Backspace, COARSE TUNE, FINE TUNE, and display HP-IB ADRS are programmable. The front panel ADRS annunciator lights when the HP 8657B is addressed to listen.		T0, L2, AH1, SH0
Trigger	No	The HP 8657B does not have a device trigger (DT0) capability.	GET	DT0
Clear	Yes	Resets the HP 8657B to a carrier frequency of 100 MHz, an output amplitude of −143.5 dBm, and no modulation. Responds equally to Device Clear (DCL) and Selected Device Clear (SDC) bus commands.	DCL, SDC	DC1
Remote	Yes	Remote operation is entered when the Remote Enable (REN) bus control line is true and the HP 8657B is first addressed to listen. The front-panel RMT and ADRS annunciators both light when remote operation is entered, all front-panel keys are disabled (except for the LOCAL key and the POWER switch), and the output signal remains unchanged.	REN	RL1
Local	Yes	The HP 8657B returns to local operation (full front-panel control) when either the Go to Local (GTL) bus command is received or the front-panel LOCAL key is pressed. The output signal remains unchanged.	GTL	RL1
Local Lockout	Yes	Disables the front-panel LOCAL key so that only the controller can return the HP 8657B to local operation.	LLO	RL1
Clear Lockout/Set Local	Yes	The HP 8657B returns to local operation and local lockout is cleared when the REN bus control line goes false.	REN	RL1
Pass Control/Take Control	No	The HP 8657B has no control capability.		C0
Require Service	No	The HP 8657B does not have the capability to request service.		SR0
Status Byte	No	The HP 8657B does not have the capability to respond to a serial poll.		T0
Status Bit	No	The HP 8657B does not have the capability to respond to a parallel poll enable.		PP0
Abort	Yes	The HP 8657B stops listening.	IFC	T0, L2
Driver Electronics	Yes	The HP 8657B has an open-collector, TTL, interface.		E1

* Commands, Control lines and Interface Functions are defined in IEEE Std 488 (and the identical ANSI Standard MC1.1). Knowledge of these might not be necessary if your controller's manual describes programming in terms of the twelve HP-IB Messages shown in the left column. Complete HP-IB capability as defined in IEEE Std 488 (and the identical ANSI Standard MC1.1) is: SH0, E1, AH1, T0, L2, SR0, RL1, PP0, DC1, DT0, and C0.

3-14. SWITCHING CHARACTERISTICS

The HP 8657B switching characteristics are an important consideration in applications involving a computer controller. If the timing requirements are not taken into account in the controller's program, it will be impossible in many situations to make meaningful measurements on a device driven by the HP 8657B.

When the frequency of the HP 8657B is changed, the RF OUTPUT is turned off, then turned back on when the RF OUTPUT is within 100 Hz and 1 dB of the new value. The time the RF OUTPUT is switched off for is <135 ms. If the RF OUTPUT is modulated, depending on the type off modulation selected, the switching time may be increased.

3-15. SELECTING THE CORRECT PULSE MODULATION MODE

If you want to use Pulse Modulation at a frequency ≥1030 MHz, then read the following information to help determine which mode of Pulse Modulation you should select for your application.

You can select two modes of Pulse Modulation:

- Pulse Modulation.
- Pulse Modulation (Fast Mode).

For both modes, if the carrier frequency is ≥1030 MHz, when Pulse Modulation is selected, or the carrier frequency or amplitude is changed with Pulse Modulation selected, then the HP 8657B performs an internal calibration.

The calibration routine turns Pulse Modulation off, switches the RF output on and then calibrates the RF output level. When the calibration is complete, the RF output is switched off, and Pulse Modulation is switched back on.

The implementation of this calibration is different for each mode of Pulse Modulation.

Pulse Modulation Calibration. During the calibration routine, the HP 8657B's attenuator is switched in to prevent the calibration signal from appearing at the RF OUTPUT. This means that in high cycle applications, where the frequency or amplitude of the HP 8657B is constantly modified, then the life of the attenuator may be reduced.

Pulse Modulation (Fast Mode) Calibration. During the calibration routine, the calibration signal or pulse will appear at the RF OUTPUT. The pulse duration is approximately 15 ms at the same level as the CW level. This might present a problem if the Device Under Test is only designed to accept pulses in the μs range.

CAUTION

The HP 8657B performs a calibration on the output level when Pulse Modulation (Fast Mode) is first selected, or when the Amplitude or Frequency is modified with Pulse Modulation (Fast Mode) selected.

During this calibration, a calibration pulse appears at the RF OUTPUT for approximately 15 ms at the same level as the CW level.

Check the specifications of any equipment which the HP 8657B is being used to test, to ensure that the calibration pulse will not cause any damage.

Impedance Mismatching

Impedance mismatch is an important consideration in deciding which mode of Pulse Modulation to select for applications using a frequency ≥1030 MHz.

Pulse Modulation (Fast Mode) calibrates directly into your load. Therefore, the level difference between CW RF and pulsed RF will be typically < ±0.1 dB.

Pulse Modulation calibrates into the attenuator. This means that any mismatch between your load, and the attenuator impedance of 50 ohms, will cause a level difference between CW RF and pulsed RF. Typically, for a 50 ohm load, the error will be < ±0.25 dB.

NOTE

This error will only be significant for RF levels > +3.9 dBm. Below this level the HP 8657B's attenuator minimizes the effect of any mismatch.

Summary

Use Pulse Modulation for:

a. General purpose bench use.

b. To test sensitive loads.

Use Pulse Modulation (Fast Mode) for:

a. Non 50 ohm loads.

b. When you require best level accuracy.

c. In ATE applications where attenuator lifespan needs to be maximised.

3-16. DETAILED OPERATING INSTRUCTIONS

The information contained in this section is presented as follows:

Title: Lists the main feature or function to be discussed.

Description: Describes the feature or function.

Keystroke Sequence: Provides information to allow you to use the feature or function.

Example: Describes the necessary steps required to accomplish one or more of the features or functions discussed in the "Keystroke Sequence."

Keys and Program Codes: Lists a table with the associated keys and HP-IB program codes for controller execution of that feature or function.

Indications: Describes the response of the HP 8657B when the keystroke sequence is performed; which annunciators will light, and which displays are used.

Comments: Describes any miscellaneous information or information to clarify the feature or function capabilities.

Related Instructions: Lists other features or functions which are related.

Table 3–8. Index of Detailed Operating Instructions

Instruction	Page	Instruction	Page
Frequency	3-36	Increment Value Change	3-44
Frequency, Coarse and Fine Tune	3-38	Increment Value Display	3-46
Frequency, Phase Up/Down	3-40		
Frequency, Up/Down	3-41	Display	3-34
		Display Amplitude Offset	3-33
Amplitude	3-26	Display Sequence	3-35
Amplitude Conversion	3-28		
Amplitude Offset	3-30	Instrument Preset	3-48
Amplitude, Up/Down	3-31		
		Recall	3-74
Modulation, AM	3-49		
Modulation, AM Up/Down	3-51	RF OFF/ON	3-75
Modulation, DC FM	3-53		
Modulation, DC FM Up/Down	3-56	Sequence	3-77
Modulation, External Source	3-58		
Modulation, FM	3-60	Save	3-76
Modulation, FM Up/Down	3-62		
Modulation, Mixed	3-64	HP-IB Address Display	3-43
Modulation, Off	3-68		
Modulation, Pulse	3-70		
Modulation, Pulse (Fast Mode)	3-72		

The detailed operating instructions are arranged in alphabetical order starting on the next page.

Amplitude

Description

This instruction details how to set the output amplitude.

Operating Characteristics

Range: +13 dBm to −143.5 dBm (+120 dBμV to −35.5 dBμV)

Resolution: 0.1 dB

Keystroke Sequence

Press the AMPTD Function key, the desired Data keys, and a valid Units key or combination of valid Units keys.

Examples

Set the output amplitude to −12.3 dBm.

	FUNCTION	DATA	UNITS
LOCAL (keys)	AMPTD	− 1 2 . 3	dBm
HP-IB (program codes)	AP −12.3 DM		

Set the output amplitude to −2.0 dB EMF μV.

	FUNCTION	DATA	UNITS
LOCAL (keys)	AMPTD	− 2 . 0	dB EMF μV
HP-IB (program codes)	AP −2.0 DB EM UV		

Keys and Program Codes

Keys	Codes
AMPTD	AP
dBm	DM
dBf	DF
dB	DB
EMF	EM
V	VL
mV	MV
μV	UV

Indications

The selected output amplitude (with sign and units) will be displayed in the AMPLITUDE Display.

Comments

Digits selected beyond the specified resolution of the AMPLITUDE Display are truncated.

Leading zeros are blanked.

Calibrated level is from −127 dBm to +3.5 dBm with underrange to −143.5 dBm and overrange to +17 dBm.

Minus sign may be entered at any time before the final terminator.

Amplitude Data entries that would cause the peak envelope power of the HP 8657B to exceed +17 dBm are rejected.

Amplitude function remains selected until:

a. One of the three remaining functions is selected (AM, FM, or FREQuency).

b. One of the SAVE, RECALL, SEQuence keys or Display (SHIFT, DSPL) is pressed.

c. The HP 8657B is preset, unplugged, or switched to standby.

Fourteen valid units entries are possible which will cause one or more AMPLITUDE annunciators to light. They are as follows:

dBm	dB μV	V	EMF mV
dBf	dB EMF V	mV	EMF μV
dBV	dB EMF mV	μV	
dBmV	dB EMF μV	EMF V	

Whenever a reverse power condition is detected, all segments and all eight LED annunciators associated with the AMPLITUDE Display flash until the source of reverse power is removed and the AMPTD key is pressed.

Related Instructions

Amplitude Conversion
Amplitude, Up/Down

Amplitude Conversion

Description

This instruction details how to change the AMPLITUDE Display from power units in dBm to any one of 13 other valid unit configurations. This feature does not affect the actual output amplitude of the HP 8657B.

Keystroke Sequence

Press any valid Units key or combination of valid Units keys with the amplitude function selected.

Example

The AMPLITUDE display shows 10.0 dBm. Change the display to units of dB μV. (The resulting display will be 117.0 dB μV.)

	PREFIX TERMINATOR	FINAL TERMINATOR
LOCAL (keys)	dB	μV
HP-IB (program codes)	DB UV	

Keys and Program Codes

Keys	Codes
dBm[1]	DM[1]
dBf[1]	DF[1]
dB[2,3]	DB[2,3]
EMF[2]	EM[2]
V[1]	VL[1]
mV[1]	MV[1]
μV[1]	UV[1]

[1] Final Terminator.
[2] Prefix Terminator.
[3] Final Terminator for Increment Set.

Indications

The AMPLITUDE Display changes to reflect the newly selected units, and the corresponding annunciator(s) will light.

Comments

The Amplitude function must be selected before the conversion entry or entries are made.

Logarithmic Data entries (dBm or dBf) will be displayed in the AMPLITUDE Display with 0.1 dB resolution.

The dBm or dBf Units terminator overrides a dB or EMF terminator.

If a dB or EMF Units terminator is selected, the AMPLITUDE Display is blanked, the corresponding annunciator lights, and the HP 8657B waits for a final terminator to be entered.

Linear Data entries (V, mV, or μV) are displayed in the three most significant digits of the AMPLITUDE Display, and the linear terminator is autoranged (or adjusted) to comply with this condition.

Conversion formulas used are as follows:

$$
\begin{aligned}
dB &= dBm \\
dBf &= dBm + 120.0 \\
dBV &= dBm - 13.0 \\
dBmV &= dBm + 47.0 \\
dB\ \mu V &= dBm + 107.0 \\
dB\ EMF\ V &= dBm - 7.0 \\
dB\ EMF\ mV &= dBm + 53.0 \\
dB\ EMF\ \mu V &= dBm + 113.0 \\
V &= 10^{(dBm-13.0)/20} \\
mV &= 10^{(dBm+47.0)/20} \\
\mu V &= 10^{(dBm+107.0)/20} \\
EMF\ V &= 10^{(dBm-7.0)/20} \\
EMF\ mV &= 10^{(dBm+53.0)/20} \\
EMF\ \mu V &= 10^{(dBm+113.0)/20}
\end{aligned}
$$

Related Instructions

Amplitude
Amplitude, Up/Down

Amplitude Offset

Description

This instruction details how to use the Amplitude Offset feature. This feature can be used to compensate the output amplitude for gains or losses in a test system due to cables, mixers, etc.

Keystroke Sequence

Press the SHIFT key, the AMPTD key, then use the Data keys to select the offset you want. Enter the offset by pressing the dB key.

Keys and Program Codes

Keys	Codes
AMPTD dB	AO DB

Indications

The RF OUTPUT amplitude is increased or decreased by the value of the offset, and the OFFSET annunciator lights. The displayed amplitude does not change.

Comments

To check the value of offset, press the SHIFT key then press and hold the AP OFS key.

To reset the output amplitude to the displayed value, enter an offset of 0 dB. The Amplitude Offset initializes to 0 dB when the HP 8657B is PRESET.

A change in RF OUTPUT amplitude that would make the sum of the amplitude and offset to be above or below the operating limits of the HP 8657B, will cause the HP 8657B to output only a maximum or minimum output limit.

Performing this feature clears any previously selected function.

Related Instructions

Display Amplitude Offset

Amplitude, Up/Down

Description

This instruction details how to change the output amplitude by the stored value of amplitude increment.

Keystroke Sequence

Press the AMPTD⇑ or AMPTD⇓ key.

Keys and Program Codes

Keys	Codes
AMPTD	AP
⇧	UP
⇩	DN

NOTE

During remote operation, repeated UP or DN codes can be sent over the bus once the amplitude function is selected.

Indications

The output amplitude changes by the stored value of amplitude increment.

Comments

Keeping either key pressed continues to change the output amplitude.

If the output amplitude increment is set to a value that would cause the HP 8657B to exceed its amplitude range (+17 dBm to −143.5 dBm), the AMPTD⇑ or AMPTD⇓ key becomes inoperative (this is determined by which amplitude limit would be exceeded). A correct decrease in the increment setting re-enables the AMPTD⇑ or AMPTD⇓ key.

Performing this feature places the HP 8657B in the Amplitude Data entry mode, and clears any previously selected function.

Increment entries are checked against maximum and minimum allowable increment limits. If a limit is exceeded, the increment entry is either truncated or rejected.

Initialized value and limits of the output amplitude increment are as follows:

Initialized Value	Minimum Value	Maximum Value
10.0 dB	0.1 dB	≤ 160.5 dB

Related Instructions

Amplitude
Amplitude Conversion
Increment Value Change
Increment Value Display

Display Amplitude Offset

DESCRIPTION

This instruction details how to display the value of the Amplitude Offset.

Keystroke Sequence

Press the SHIFT key, then press and hold the AMPTD key.

Indications

The Amplitude Offset value is shown in the AMPLITUDE display as long as the AMPTD key remains pressed.

Comments

The Amplitude Offset initializes to a value of 0 dB when the HP 8657B is preset.

If RF ON/OFF is switched to OFF, you can still check the value of Amplitude Offset.

Performing this feature:

- Clears any previously selected function.
- Does not affect the original AMPLITUDE display setting.
- Keeps the HP 8657B in the Amplitude Offset mode until another function key is pressed.

Related Instructions

Amplitude Offset
Display
Display Sequence
HP-IB Address Display
Increment Value Display

Display

Description

This instruction details how to review a saved front-panel set-up.

Keystroke Sequence

Press the SHIFT key then press the DSPL key. Use the Data keys to select the set-up you want to review (press and hold the second Data key).

Example

Review the front-panel set-up saved in memory location 02.

LOCAL (keys)	SHIFT	DSPL SEQ	0	2
HP-IB (program codes)	This feature is not accessible via HP-IB.			

Indications

The selected set-up is displayed as long as the last Data key remains pressed.

Comments

You can save up to 100 (0-99) front-panel set-ups (exclusive of increment settings).

Performing this feature:

- Does not affect the current set-up of the HP 8657B.
- Does not change the position of the sequence counter.
- Clears any previously selected function.

All displays are restored to the current HP 8657B set-up when the Data key is released.

Related Instructions

Display Amplitude Offset
Display Sequence
Recall
Sequence
Store

Display Sequence

Description

This instruction details how to display the current position of the sequence counter.

Keystroke Sequence

Press the SHIFT key, press DSPL, and then press and hold the SEQ key.

Indications

The current position of the sequence counter is displayed in AMPLITUDE Display as long as the SEQ key remains pressed.

Comments

Performing this feature:

- Clears any previously selected function.
- Does not affect the actual output of the HP 8657B.

The AMPLITUDE Display is restored to reflect the actual HP 8657B output when the SEQ key is released.

Related Instructions

Display
Display Amplitude Offset
Sequence

Frequency

Description

This instruction details how to set the carrier frequency.

Operating Characteristics:

Range: 100 kHz to 2060 MHz (2060.000000 MHz)
Resolution: 1 Hz

Keystroke Sequence

Press the FREQuency Function key, the desired Data keys, and a valid Units key.

Example

Set the carrier frequency to 123.45 MHz.

	FUNCTION	DATA	UNITS
LOCAL (keys)	FREQ	1 2 3 . 4 5	MHz
HP-IB (program codes)	FR 123.45 MZ		

Keys and Program Codes

Keys	Codes
FREQ	FR
MHz	MZ
kHz	KZ
No key	HZ

Indications

The selected carrier frequency is displayed in megahertz in the FREQUENCY Display.

Comments

Digits selected beyond the specified resolution of the FREQUENCY Display are truncated.

Leading zeros are blanked.

Carrier frequencies below 100 kHz will result in an uncalibrated output amplitude.

If you select a carrier frequency that makes the currently selected FM Peak Deviation outside the HP 8657B operating limits, then the MODULATION Display flashes. To clear this error condition enter a new carrier frequency in the correct band for the selected Peak Deviation. To automatically select the maximum permitted Peak Deviation for the carrier frequency, press the FM, FM⇑ or FM⇓ key.

Carrier Frequency (MHz)	Maximum Peak Deviation	
	AC Mode (the lesser of)	DC Mode
0.1 to 130	200 kHz or 4000 × rate (Hz)	200 kHz
130 to 260	50 kHz or 1000 × rate (Hz)	50 kHz
260 to 520	100 kHz or 2000 × rate (Hz)	100 kHz
520 to 1040	200 kHz or 4000 × rate (Hz)	200 kHz
1040 to 2060	400 kHz or 8000 × rate (Hz)	400 kHz

The Frequency function remains selected until:

a. One of the three remaining functions is selected (AM, FM, or AMPTD).

b. One of the SAVE, RECALL, SEQuence keys or Display (SHIFT, DSPL) is pressed.

c. The HP 8657B is preset, unplugged, or switched to standby.

Related Instructions

Frequency, Coarse and Fine Tune
Frequency, Up/Down

Frequency, Coarse and Fine Tune

Description

This instruction details how to quickly tune the carrier frequency in decade steps using the step-up and step-down keys associated with the carrier frequency function.

Keystroke Sequence

This feature is enabled by pressing either the COARSE TUNE or FINE TUNE key.

Pressing either key will increase (COARSE TUNE) or decrease (FINE TUNE) the carrier frequency tuning value by a factor of 10.

Pressing the step-up key increases the carrier frequency by the newly selected carrier frequency tuning value, while pressing the step-down key decreases the carrier frequency.

This feature is disabled and the original carrier frequency increment value is enabled by pressing the INCR SET key (with the frequency function selected).

Example

Enable a carrier frequency tuning value of 10 kHz (assuming a starting value of 10 MHz).

LOCAL (keys)	FINE TUNE (−10)	FINE TUNE (−10)	FINE TUNE (+10)
HP-IB (program codes)	This feature is not accessible via HP-IB.		

Indications

Whenever the COARSE TUNE or FINE TUNE key is pressed and held, the frequency digit that corresponds to the carrier frequency tuning value will flash.

When the COARSE TUNE key is pressed again, the next digit to the left will flash to indicate the new tuning value.

When the FINE TUNE key is pressed again, the next digit to the right will flash to indicate the new tuning value.

Comments

This feature only applies to the carrier frequency function.

COARSE TUNE and FINE TUNE keys are always available to change the carrier frequency tuning value by a factor of 10.

Performing this feature:

- Places the HP 8657B into the frequency Data entry mode, and clears any previously selected function, once either the step-up or step-down key is pressed.
- Enables the last valid carrier frequency increment value when the INCR SET key is pressed.

Related Instructions

Frequency
Frequency, Up/Down
Increment Value Change

Frequency, Phase Up/Down

Description

This instruction details how to change the carrier frequency phase in one-degree increments or decrements with respect to the internal or external timebase.

Keystroke Sequence

Press the SHIFT key, then press the step-up or step-down keys associated with the carrier frequency function.

Keys and Program Codes

Keys	Codes
Φ ⇧	PI
Φ ⇩	PD

NOTE

During remote operation, repeated PI or PD codes can be sent over the bus.

Indications

The carrier frequency phase changes in 1 degree steps each time the keystroke sequence is followed.

Comments

The carrier frequency phase continues to increment or decrement in 1 degree steps, if either key remains pressed.

Selecting this feature does not affect any previously selected function.

Frequency, Up/Down

Description

This instruction details how to change the carrier frequency by the stored value of frequency increment.

Keystroke Sequence

Press the FREQ⇑ or FREQ⇓ key.

Keys and Program Codes

Keys	Codes
FREQ	FR
⇧	UP
⇩	DN

NOTE

During remote operation, repeated UP or DN codes can be sent over the bus once the frequency function is selected.

Indications

The carrier frequency changes by the stored value of frequency increment.

Comments

Performing this feature:

- Places the HP 8657B in the Frequency Data entry mode, and clears any previously selected function.
- Continues to change the carrier frequency by the stored value of frequency increment if either key remains pressed.

Increment entries are checked against maximum and minimum allowable increment limits. If a limit is exceeded, the increment entry is either truncated or rejected.

If the carrier frequency increment is set to a value that would cause the HP 8657B to exceed its frequency range, then either the FREQ⇑ or FREQ⇓ key is made inactive (determined by which frequency limit would be exceeded). Decreasing the frequency increment reactivates the key.

If you select a carrier frequency that makes the currently selected FM Peak Deviation outside the HP 8657B's operating limits, then the MODULATION Display flashes. To clear this error condition enter a new carrier frequency in the correct band for the selected Peak Deviation. To automatically select the maximum permitted Peak Deviation for the carrier frequency, press the FM, FM⇑ or FM⇓ key.

Carrier Frequency (MHz)	Maximum Peak Deviation	
	AC Mode (the lesser of)	DC Mode
0.1 to 130	200 kHz or 4000 × rate (Hz)	200 kHz
130 to 260	50 kHz or 1000 × rate (Hz)	50 kHz
260 to 520	100 kHz or 2000 × rate (Hz)	100 kHz
520 to 1040	200 kHz or 4000 × rate (Hz)	200 kHz
1040 to 2060	400 kHz or 8000 × rate (Hz)	400 kHz

Initialized value and limits of the carrier frequency increment are as follows:

Initialized Value	Minimum Value	Maximum Value
10.00000 MHz	0.001 kHz	≤ 999.999999 MHz

Related Instructions

Frequency
Frequency, Coarse and Fine Tune
Increment Value Change
Increment Value Display

HP-IB Address Display

Description

This details how to display the HP 8657B's decimal HP-IB address.

Keystroke Sequence

Press the SHIFT key, then press and hold ADRS.

Indications

The internally set, decimal HP-IB address is displayed in the MODULATION Display as long as ADRS remains pressed.

Comments

The HP-IB address is factory-set to 07 decimal. (In binary, this is 00111, the equivalent ASCII character is an apostrophe).

The HP-IB address is updated only when the HP 8657B is powered up.

To change the HP-IB address, refer to paragraph 2-11, HP-IB Address Selection.

The MODULATION Display is restored to reflect the actual output when ADRS is released.

Related Instructions

Display Amplitude Offset

Increment Value Change

Description

This instruction details how to change the value of the stored increments which are controlled by the step-up and step-down keys associated with each of the four main functions. Increment values for the carrier frequency, output amplitude, AM depth, and FM peak deviation can be stored. The initialized value of each stored increment is listed as follows:

Functions	Initialized Value
Carrier Frequency	100 MHz
Output Amplitude	10 dB
AM Depth	1%
FM Peak Deviation	1.0 kHz

Keystroke Sequence

Press a Function key, the INCR SET key, the desired Data keys, and a valid Units Key.

Example

Set a carrier frequency increment of 1 MHz.

	FUNCTION	INCREMENT SET	DATA	UNITS
LOCAL (keys)	FREQ	INCR SET	1	MHz
HP-IB (program codes)	FR IS 1 MZ			

Keys and Program Codes

Keys	Codes	Keys	Codes
INCR SET	IS	%	% or PC
FREQ	FR	dBM	DM
AMPTD	AP	dBF	DF
AM	AM	dB	DB

Indications

The value of the increment appears in the display associated with the selected function as the data is entered.

Comments

FM peak deviation increments are selected in units of kHz only. AM depth is selected without fractional digits. All fractional digits are truncated.

If the increment value change is set to a value that would cause the HP 8657B to exceed a minimum or maximum range, the step-up and step-down key associated with that function become inoperative. A correct decrease in the increment setting re-enables the step-up and step-down keys.

Increment entries are checked against maximum and minimum allowable increment limits. If a limit is exceeded the increment entry is either truncated or rejected.

Minimum and maximum allowable increment values for each of the four main functions are listed as follows:

Function	Minimum Value	Maximum Value
Carrier Frequency	0.001 kHz	≤ 999.999999 MHz
Output Amplitude	0.1 dB	≤ 160.5 dB
	0.001 μV	≤ 1.57 V
	0.001 EMF μV	≤ 3.15 EMF V
AM Depth	1%	≤ 100%
FM Peak Deviation	0.1 kHz	≤ 200 kHz

All displays are restored to reflect the actual HP 8657B output as soon as a valid increment terminator is selected.

Related Instructions

Amplitude, Up/Down
Frequency, Coarse and Fine Tune
Frequency, Up/Down
Increment Value Display Modulation, AM Up/Down
Modulation, DC FM
Modulation, FM Up/Down

Increment Value Display

Description

This instruction details how to display the stored value of the increments which are controlled by the step-up and step-down keys associated with each of the four main functions. Increment values for the carrier frequency, output amplitude, AM depth, and FM peak deviation can be displayed.

Keystroke Sequence

Press a function key, then press and hold the INCR SET key.

Example

Display the stored carrier frequency increment.

	FUNCTION	INCREMENT SET
LOCAL (keys)	FREQ	INCR SET
HP-IB (program codes)	FR IS	

Keys and Program Codes

Keys	Codes
AM	AM
FM	FM
INCR SET	IS
FREQ	FR
AMPTD	AP

Indications

The stored value of the increment is displayed in the display associated with the selected function as long as the INCR SET key remains pressed.

Comments

The initialized value of each stored increment is listed as follows:

Functions	Initialized Value
Carrier Frequency	100 MHz
Output Amplitude	10 dB
AM Depth	1%
FM Peak Deviation	1.0 kHz

The display is restored to reflect the actual HP 8657B output when the INCR SET key is released.

Related Instructions

Amplitude Up/Down
Display Amplitude Offset
Frequency, Up/Down
Increment Value Change
Modulation, AM Up/Down
Modulation, DC FM
Modulation, FM Up/Down

Instrument Preset

Description

This instruction details how to preset the HP 8657B.

Keystroke Sequence

Press the SHIFT key, and then the 0 units key.

NOTE

Sending the Clear message via HP-IB is equivalent to performing an instrument preset.

Indications

When a preset is performed, the HP 8657B resets to the following:

Carrier Frequency and Amplitude: 100 MHz, −143.5 dBm
Carrier Frequency Increment: 10 MHz
Output Amplitude Increment: 10 dB
Output Amplitude Offset: 0 dB
AM Depth: 0%
AM Depth Increment: 1%
FM Peak Deviation: 0.0 kHz
FM Peak Deviation Increment: 1 kHz
Sequence Counter: Resets to 0

Comments

Performing this feature does not affect any saved front panel set-ups.

Related Instructions

None

Modulation, AM

Description

This instruction details how to select Internal Amplitude Modulation.

Operating Characteristics:

Depth: 0 - 100%, level ≤ +7 dBm, fc >400 kHz
0 - 30%, level ≤ +10 dBm, fc >400 kHz
Resolution: 1%
Rate (internal): 400 Hz and 1 kHz, ±2%

Keystroke Sequence

Press an Internal Source key, the AM function key, the desired Data keys, and a valid Units key. (You do not need to press an Internal Source key if you require a 1 kHz modulation rate).

Example

Select Internal AM with a modulation depth of 75% and a modulation rate of 400 Hz.

	SOURCE	FUNCTION	DATA	UNITS
LOCAL (keys)	INT 400 Hz	AM	7 5	%
HP-IB (program codes)	S2 AM 75 PC or %			

Keys and Program Codes

Keys	Codes
INT 400 Hz	S2
INT 1 kHz	S3
AM	AM
%	PC or %

Indications

Selected AM depth is displayed in the MODULATION Display, and the source annunciators (INT AM, 400 Hz, and %) will light.

Comments

Digits selected beyond the specified resolution for AM depth are truncated.

Leading zeros are blanked.

AM depth Data entries that would cause the peak envelope power of the HP 8657B to exceed +17 dBm are rejected.

The External Source key may be selected in place of the Internal Source key.

AM function remains selected until:

a. One of the three remaining functions is selected (AMPTD, FM, or FREQuency).

b. One of the SAVE, RECALL, SEQuence keys or Display (SHIFT, DSPL) is pressed.

c. The HP 8657B is preset, unplugged, or switched to standby.

A one key sequence acts as a select between the two internal modulation sources.

Only one internal modulation source can be selected at any time either 400 Hz or 1 kHz.

Related Instructions

Modulation, AM Up/Down
Modulation, External Source
Modulation, Mixed
Modulation, Off
Modulation, Pulse
Modulation, Pulse (Fast Mode)

Modulation, AM Up/Down

Description

This instruction details how to change the percentage of AM depth by the stored value of AM depth increment.

Keystroke Sequence

Press the AM⇑ or AM⇓ key.

Keys and Program Codes

Keys	Codes
AM ⇧ ⇩	AM UP DN

NOTE

In remote operation, repeated UP or DN codes can be sent over the bus once the AM function is selected.

Indications

The percentage of AM depth changes by the stored value of AM depth increment.

Comments

Performing this feature:

- Places the HP 8657B in the AM Data entry mode, and clears any previously selected function.
- Selects default modulation source (internal 1 kHz) if no other source is selected.
- Will automatically stop incrementing when the maximum percentage of AM depth permitted for a selected output amplitude is reached.
- Continues to change the percentage of AM depth by the value stored in the AM depth increment register if either key remains pressed.

If the AM depth increment is set to a value that would cause the HP 8657B to exceed a modulation depth of 1 to 100%, either the AM⇑ or AM⇓ key becomes inoperative (determined by which limit would be exceeded). A correct decrease in the increment setting re-enables the AM⇑ or AM⇓ key.

Increment entries are checked against maximum and minimum allowable increment limits. If an AM depth increment limit is exceeded the entry is truncated.

Initialized value and limits of the AM depth increment are as follows:

Initialized Value	Minimum Value	Maximum Value
1%	1%	≤ 100%

Related Instructions

Increment Value Change
Increment Value Display
Modulation, AM
Modulation, Off
Modulation, DC FM Up/Down
Modulation, FM Up/Down
Modulation, Pulse
Modulation, Pulse (Fast Mode)

Modulation, DC FM

Description

This instructions details how to select DC FM modulation.

Operating Characteristics:

Band	Carrier Frequency (MHz)	Maximum Peak Deviation DC Mode (kHz)
1	0.1-130	200
2	130-260	50
3	260-520	100
4	520-1040	200
5	1040-2060	400

Resolution: 0.1 kHz for peak deviations < 100 kHz (Frequency=0.1 to 1040 MHz)
1 kHz for peak deviations ≥ 100 kHz (Frequency=0.1 to 1040 MHz)
Resolution: 0.2 kHz for peak deviations < 100 kHz (Frequency=1040 to 2060 MHz)
2 kHz for peak deviations ≥ 100 kHz (Frequency=1040 to 2060 MHz)
DC calibrated input level: ±1 Vdc

CAUTION

Maximum allowable input level is ±15 Vdc. Exceeding this limit may cause damage to the HP 8657B.

Keystroke Sequence

Press the SHIFT key, the FM function key, the desired Data Keys and a valid Units key.

Example

Select DC FM with a peak deviation of 50 kHz.

	FUNCTION	DATA	UNITS
LOCAL (keys)	SHIFT FM	5 0	kHz
HP IB (program codes)	S5 50 KZ		

Keys and Program Codes

Keys	Codes
DC FM kHz	S5 KZ

Indications

Selected DC FM peak deviation are displayed in the MODULATION Display, and the Modulation annunciators (DC FM, EXT FM, and LO EXT) will light.

Comments

Selecting DC FM automatically enables the front-panel MOD INPUT/OUTPUT connector for an external modulation source.

The LO EXT Modulation annunciator remains on regardless of the dc input level applied to the MOD INPUT/OUTPUT connector.

The LO EXT Modulation annunciator turns off if external AM or FM is selected along with DC FM, and the external source has been adjusted to 1 Vpk (0.707 Vrms ±5%).

Digits selected beyond the specified resolution for DC FM peak deviation are truncated.

Leading zeros are blanked.

DC FM peak deviation Data entries that would be out-of-range for the selected carrier frequency are rejected.

If you select a carrier frequency that makes the currently selected FM Peak Deviation outside the HP 8657B operating limits, then the MODULATION Display flashes. To clear this error condition enter a new carrier frequency in the correct band for the selected Peak Deviation. To automatically select the maximum permitted Peak Deviation for the carrier frequency, press the FM, FM⇑ or FM⇓ key.

DC FM function remains selected until:

a. One of the three remaining functions is selected (AM, AMPTD, or FREQuency).

b. One of the SAVE, RECALL, SEQuence keys or Display (SHIFT, DSPL) is pressed.

c. The HP 8657B is preset, unplugged, or switched to standby.

Related Instructions

Modulation, DC FM Up/Down
Modulation, External Source
Modulation, Mixed
Modulation, Off
Modulation, Pulse
Modulation, Pulse (Fast Mode)

Modulation, DC FM Up/Down

Description

This instruction details how to change the DC FM peak deviation by the stored value of FM peak deviation increment.

Keystroke Sequence

Press the FM⇑ or FM⇓ key.

Keys and Program Codes

Keys	Codes
DC FM ⇧ ⇩	S5 UP DN

NOTE

During remote operation, repeated UP or DN codes can be sent over the bus once the DC FM function is selected.

Indications

The DC FM peak deviation changes by the stored value of FM peak devaition increment.

Comments

Performing this feature:

- Continues to change the DC FM peak deviation by the stored value of FM peak deviation increment if either key remains pressed.
- Will automatically stop incrementing when the maximum FM peak deviation permitted for a selected carrier frequency is reached.

If an out-of-range condition exists (MODULATION Display flashing) pressing either the FM, FM⇑ or FM⇓ key automatically selects the maximum FM peak deviation permitted for the currently selected carrier frequency.

Initialized value and limits of the FM peak deviation increment are as follows:

Initialized Value	Minimum Value	Maximum Value
1 kHz	0.1 kHz	≤ 400 kHz

NOTE

The maximum value of FM peak deviation increment you can select is determined by the Carrier Frequency selected.

Related Instructions

Increment Value Change
Increment Value Display
Modulation, AM Up/Down
Modulation, DC FM
Modulation, FM Up/Down
Modulation, Off
Modulation, Pulse
Modulation, Pulse (Fast Mode)

Modulation, External Source

Description

This instruction details how to apply an external modulation signal via the front-panel MOD INPUT/OUTPUT connector.

Operating Characteristics:

Rate: (AM) 20 Hz to 40 kHz; 1 dB bandwidth, ac coupled
(FM) 5 Hz to 100 kHz; ±3 dB, ac coupled
20 Hz to 50 kHz; ±1 dB, ac coupled
dc to 100 kHz; ±3 dB, dc coupled
dc to 50 kHz; ±1 dB, dc coupled
Input Impedance: 600 ohms (resistive)
Input Level: 1 Vpk (0.707 Vrms)

Keystroke Sequence

Press the EXT key to enable the front-panel MOD INPUT/OUTPUT connector, then set the signal level of the external modulation source to 1 Vpk (0.707 Vrms) for calibrated internal control of the AM depth or FM peak deviation.

Keys and Program Codes

Keys	Codes
AM	AM
FM	FM
EXT	S1
%	% or PC
kHz	KZ

Indications

The HI EXT annunciator lights if the external modulation signal is greater than 1.02 Vpk (0.721 Vrms), and the LO EXT annunciator lights if the signal is less than 0.98 Vpk (0.693 Vrms). Both annunciators are off when the input level is 1.00 ±0.02 Vpk (0.707 Vrms), except when exclusively in the DC FM Mode in which case the LO EXT annunciator remains on.

NOTE

If greater accuracy is required, use a calibrated voltmeter to measure the external modulation signal.

Comments

The 400 Hz or 1 kHz modulation signal is available at the MOD INPUT/OUTPUT connector when INTernal modulation is selected (level 1 Vpk - 0.707 Vrms).

For AM or FM the front-panel MOD INPUT/OUTPUT connector is ac coupled. For DC FM the front-panel MOD INPUT/OUTPUT connector is dc coupled.

Related Instructions

Modulation, AM
Modulation, DC FM
Modulation, FM
Modulation, Mixed
Modulation, Off
Modulation, Pulse
Modulation, Pulse (Fast Mode)

Modulation, FM

Description

This instruction details how to select Internal Frequency Modulation.

Operating Characteristics:

Carrier Frequency (MHz)	Maximum Peak Deviation	
	AC Mode (the lesser of)	DC Mode
0.1 to 130	200 kHz or 4000 × rate (Hz)	200 kHz
130 to 260	50 kHz or 1000 × rate (Hz)	50 kHz
260 to 520	100 kHz or 2000 × rate (Hz)	100 kHz
520 to 1040	200 kHz or 4000 × rate (Hz)	200 kHz
1040 to 2060	400 kHz or 8000 × rate (Hz)	400 kHz

Resolution: 0.1 kHz for peak deviations < 100 kHz (frequency <1040 MHz)
1 kHz for peak deviations ≥ 100 kHz (frequency <1040 MHz)
0.2 kHz for peak deviations < 100 kHz (frequency >1040 MHz)
2 kHz for peak deviations ≥ 100 kHz (frequency >1040 MHz)
Rate (internal): 400 Hz or 1 kHz, ±2%

Keystroke Sequence

Press an internal Source key, the FM Function key, the desired Data keys, and a valid Units key.(You do not need to press an Internal Source key if you require a 1 kHz modulation rate).

Example

Select Internal FM with a peak deviation of 25 kHz and a modulation rate of 400 Hz.

	SOURCE	FUNCTION	DATA	UNITS
LOCAL (keys)	INT 400 Hz	FM	2 5	kHz
HP-IB (program codes)	S2 FM 25 KZ			

Keys and Program Codes

Keys	Codes
FM	FM
INT 400 Hz	S2
INT 1 kHz	S3
kHz	KZ

Indications

The FM peak deviation is displayed in the MODULATION Display, and the source annunciators (INT FM and 400 Hz) light.

Comments

Digits selected beyond the specified resolution for FM peak deviation are truncated.

Leading zeros are blanked.

A one-key sequence acts as a select between the two internal modulation sources.

The External Source key may be selected in place of the Internal Source key.

Only one internal modulation source can be selected at any time, either 400 Hz or 1 kHz.

FM peak deviation Data entries are rejected if they would cause the selected carrier frequency to be out-of-range.

If you select a carrier frequency that makes the currently selected FM Peak Deviation outside the HP 8657B operating limits, then the MODULATION Display flashes. To clear this error condition enter a new carrier frequency in the correct band for the selected Peak Deviation. To automatically select the maximum permitted Peak Deviation for the carrier frequency, press the FM, FM⇑ or FM⇓ key.

The FM function remains selected until:

a. One of the three remaining functions is selected (AM, AMPTD, or FREQuency).

b. One of the SAVE, RECALL, SEQuence keys or Display (SHIFT, DSPL) is pressed.

c. The HP 8657B is preset, unplugged, or switched to standby.

Related Instructions

Modulation, FM Up/Down
Modulation, External Source
Modulation, Mixed
Modulation, Off
Modulation, Pulse
Modulation, Pulse (Fast Mode)

Modulation, FM Up/Down

Description

This instruction details how to change the FM Peak Deviation by the stored value of FM Peak Deviation increment.

Keystroke Sequence

Press the FM⇑ or FM⇓ key.

Keys and Program Codes

Keys	Codes
FM	FM
⇧	UP
⇩	DN

NOTE

In remote operation, repeated UP or DN codes can be sent over the bus once the FM function is selected.

Indications

The FM peak deviation changes by the stored value of FM peak deviation increment.

Comments

If the FM peak deviation increment is set to a value that would cause the HP 8657B to exceed its peak deviation range, the step-up and step-down keys become inoperative. A correct decrease in the increment setting re-enables the step-up and step-down keys.

Performing this feature:

- Places the HP 8657B in the FM Data entry mode, and clears any previously selected function.
- Selects default modulation source (internal 1 kHz) if no other source is selected.
- Continues to change the FM peak deviation by the value stored in the FM peak deviation increment register if either key remains pressed.
- Will automatically stop incrementing when the maximum FM peak deviation permitted for a selected carrier frequency is reached.

If an out-of-range condition exists (MODULATION Display flashing), pressing either the FM, FM⇑ or FM⇓ key automatically selects the maximum FM peak deviation permitted for the currently selected carrier frequency.

Increment entries are checked against maximum and minimum allowable increment limits. If a limit is exceeded, the increment entry is either truncated or rejected.

Initialized value and limits of the FM peak deviation increment are as follows:

Initialized Value	Minimum Value	Maximum Value
1.0 kHz	0.1 kHz	≤ 400 kHz

NOTE

The maximum value of FM peak deviation increment you can select is determined by the Carrier Frequency selected.

Related Instructions

Increment Value Change
Increment Value Display
Modulation, AM Up/Down
Modulation, FM
Modulation, DC FM Up/Down
Modulation, Off
Modulation, Pulse
Modulation, Pulse (Fast Mode)

Modulation, Mixed

Description

These instructions detail the selection of mixed modulation. Modulation is selected in one of six ways.

1. Simultaneous AM and FM is selected using common or separate modulation sources (rate).
2. Simultaneous AM or FM at two rates is selected by using internal and external modulation sources. Only one AM depth or one FM deviation can be selected.
3. Three simultaneous modulation signals, AM and FM using a common source (rate) and either AM or FM from a separate source, may be selected.
4. Four simultaneous modulation signals, two AM and two FM, may be selected. Each AM/FM pair must have a common modulation source (rate). Only one AM depth and one FM deviation can be selected.
5. DC FM may be selected and entered along with any of the four ways mentioned in statements 1-4.
6. Pulse Modulation may be selected along with AM and FM (Internal and/or External) and/or DC FM Modulation (Option 003 only).

Keystroke Sequence 1

To select simultaneous AM and FM, press the Source key to provide the desired AM rate, the AM Function key, the desired Data keys, and the % Units key. Then press the Source key to provide the desired FM rate, the FM Function key, the desired Data keys, and the kHz Units key. (The Source key need not be pressed for FM if the AM and FM rate is the same. Only one internal rate can be used at a time.)

Example 1

Simultaneously select AM with a depth of 70% and FM with a peak deviation of 3 kHz using the internal 400 Hz source, and an external 1 kHz source respectively.

	SOURCE	FUNCTION	DATA	UNITS
LOCAL (keys)	INT 400 Hz EXT	AM FM	7 0 3	% kHz
HP-IB (program codes)	S2 AM 70 PC or % S1 FM 3 KZ			

Keystroke Sequence 2

To select simultaneous AM or FM, press the desired Source key, the desired Function key, the desired Data keys, and a valid Units key. Then press the other Source key, and the same Function key that was selected previously.

Example 2

Select FM with a peak deviation of 5 kHz using both an internal 1 kHz modulation source and an external 150 Hz modulation source.

	SOURCE	FUNCTION	DATA	UNITS
LOCAL (keys)	INT 1 kHz EXT	FM FM	5	kHz
HP-IB (program codes)	S3 FM 5 KZ S1 FM			

Keystroke Sequence 3

To select three simultaneous modulation signals, AM and FM using a common source (rate) and AM or FM from a separate source, press the Source key to provide the common AM and FM rate. Then press a Function key, the desired Data keys, and the valid Units key. Press the other Function key, the desired Data keys, and the valid Units key. Press the other Source key, the appropriate Function key, the desired Data keys, and the valid Units key.

Example 3

Simultaneously select AM with a depth of 90% and FM with a peak deviation of 25 kHz using the internal 400 Hz source, and AM with a depth of 90% using an external 6 kHz modulation source.

	SOURCE	FUNCTION	DATA	UNITS
LOCAL (keys)	INT 400 Hz EXT	AM FM AM	9 0 2 5	% kHz
HP-IB (program codes)	S2 AM 90 PC or % FM 25 KZ S1 AM			

Keystroke Sequence 4

To select four simultaneous modulation signals, press the appropriate Source key, a Function key, the desired Data keys, and the valid Units key. Press the other Function key, the desired Data keys and valid Units key. Press the other Source key, and then both Function keys.

Example 4

Simultaneously select AM with a depth of 10% and FM with a peak deviation of 50 kHz using the internal 1 kHz modulation source. AM and FM with the same depth and deviation as selected previously are also selected using an external 5 kHz source.

	SOURCE	FUNCTION	DATA	UNITS
LOCAL (keys)	INT 1 kHz	AM	1 0	%
		FM	5 0	kHz
	EXT	AM		
	EXT	FM		
HP-IB (program codes)	S3 AM 10 PC or % FM 50 KZ S1 AM S1 FM			

Keys and Program Codes

Keys	Codes
AM	AM
FM	FM
EXT	S1
INT 400 Hz	S2
INT 1 kHz	S3
DC FM	S5
PULSE	PM
PULSE (Fast)	PF

Indications

The last selected AM depth or FM peak deviation is displayed in the MODULATION Display, and the source annunciators will light. In the case where an external modulation source is used, the HI EXT and LO EXT annunciators will also light until the signal level of the external source is adjusted to 1 Vpk (0.707 Vrms) ±5%.

Comments

Digits selected beyond the specified resolution for AM depth or FM peak deviation are truncated.

Leading zeros are blanked.

AM depth Data entries that would cause the peak envelope power of the HP 8657B to exceed +17 dBm are rejected.

FM peak deviation Data entries that are out-of-range for the selected carrier frequency are rejected.

If you select a carrier frequency that makes the currently selected FM Peak Deviation outside the HP 8657B operating limits, then the MODULATION Display flashes. To clear this error condition enter a new carrier frequency in the correct band for the selected Peak Deviation. To automatically select the maximum permitted Peak Deviation for the carrier frequency, press the FM, FM⇑ or FM⇓ key.

Carrier Frequency (MHz)	Maximum Peak Deviation	
	AC Mode (the lesser of)	DC Mode
0.1 to 130	200 kHz or 4000 × rate (Hz)	200 kHz
130 to 260	50 kHz or 1000 × rate (Hz)	50 kHz
260 to 520	100 kHz or 2000 × rate (Hz)	100 kHz
520 to 1040	200 kHz or 4000 × rate (Hz)	200 kHz
1040 to 2060	400 kHz or 8000 × rate (Hz)	400 kHz

The AM or FM function remains selected until:

a. One of the three remaining functions is selected.

b. One of the SAVE, RECALL, SEQuence keys or Display (SHIFT, DSPL) is pressed.

c. The HP 8657B is preset, unplugged, or switched to standby.

Setting the level of the external modulation source is described under Modulation, External Source.

Related Instructions

Modulation, AM
Modulation, DC FM
Modulation, External Source
Modulation, FM
Modulation, OFF
Modulation, Pulse
Modulation, Pulse (Fast Mode)

Modulation, Off

Description

This instruction details how to selectively turn off Modulation functions and sources.

Keystroke Sequences

To turn off a modulation function (AM or FM), press the Function key, then the OFF key.

To turn off a modulation source (internal 400 Hz, internal 1 kHz, or external), press the associated Function key, Source key, then the OFF key.

To turn off Pulse Modulation, when only Pulse Modulation is selected, press the OFF key. To turn off Pulse Modulation, when Pulse Modulation is selected with AM or FM, press the PULSE then the OFF key.

To turn off Pulse Modulation (Fast Mode), when only Pulse Modulation (Fast Mode) is selected, press the OFF key. To turn off Pulse Modulation (Fast Mode), when it is selected with AM or FM, press the SHIFT key, then the ⇑ key below the AM function key, then the OFF key.

Examples

Selectively turn off AM modulation function with only one modulation source in use.

	FUNCTION	SOURCE
LOCAL (keys)	AM	OFF
HP-IB (program codes)	AM S4	

Selectively turn off internal 400 Hz source.

	FUNCTION	SOURCE
LOCAL (keys)	AM	INT 400 Hz OFF
HP-IB (program codes)	AM S2 S4	

Keys and Program Codes

Keys	Codes
AM	AM
FM	FM
EXT	S1
INT 400 Hz	S2
INT 1 kHz	S3
OFF	S4
DC FM	S5
PULSE	PM
PULSE (Fast)	PF

Indications

The current MODULATION Display is blanked or the modulation source (including its annunciator) is turned off when the OFF key is pressed.

Comments

The currently selected modulation function (AM or FM) is turned off when the OFF key is pressed, provided only one source (internal 400 Hz or 1 kHz, or external) is selected for use.

If more than one source is selected, then a Source key (INT 400 Hz, INT 1 kHz, or EXT) has to be pressed before the OFF key is pressed. In this case, the currently selected modulation function remains selected, and only the chosen source (including its annunciator) is turned off.

If both modulation functions are simultaneously selected and share the same source, then; only the currently selected modulation function is turned off when the OFF key is pressed, and the MODULATION Display is restored to show the modulation parameters of the remaining function.

Related Instructions

Modulation, AM
Modulation, AM Up/Down
Modulation, DC FM
Modulation, DC FM Up/Down
Modulation, FM
Modulation, FM Up/Down
Modulation, External Source
Modulation, Mixed
Modulation, Pulse
Modulation, Pulse (Fast Mode)

Modulation, Pulse

Description

This instruction details how to select Pulse Modulation.

Operating Characteristics:

On/Off Ratio: > 70 dB (0.1 to 1030 MHz)
> 95 dB (1030 to 2060 MHz)
Rise/Fall Time: < 50 ns, fc ≥1030 MHz
< 35 ns, fc <1030 MHz
Duty Cycle: 0 - 100%
Nominal Input Threshold: 1.6V

CAUTION

Maximum allowable input level is ±15 Vdc. Exceeding this limit may cause damage to the HP 8657B.

Keystroke Sequence

Press the SHIFT key then the AM function key. Connect the external modulation source to the PULSE INPUT. When the pulse waveform from the external source goes high, the pulse output from the HP 8657B turns on. Vary the external pulse rate, amplitude and width to simulate the pulse modulated signal you require.

Keys and Program Codes

Keys	Codes
PULSE	PM

Indications

The PULSE annunciator lights.

Comments

The Pulse Input Impedance can be selected for 50 ohms or high impedance. The factory setting is high impedance. If you want to select 50 ohms, refer to paragraph 2-15.

When the carrier frequency is ≥1030 MHz, and the Amplitude or Frequency is changed when Pulse Modulation is selected, the HP 8657B performs a calibration on the output level. During this calibration the attenuator is switched in to prevent the calibration signal from appearing at the RF OUTPUT.

If the HP 8657B is being used in an automated test system where the Frequency or Amplitude is modified when Pulse Modulation is selected and the carrier frequency is ≥ 1030 MHz, then attenuator life can be extended by selecting Pulse Modulation (Fast Mode).

Refer to page 3-22 for more information about selecting the best mode of Pulse Modulation for your application.

CAUTION

For carrier frequencies ≥1030 MHz, the HP 8657B performs a calibration on the output level when Pulse Modulation (Fast Mode) is first selected, or when the Amplitude or Frequency is modified with Pulse Modulation (Fast Mode) selected.

During this calibration, a calibration pulse appears at the RF OUTPUT for approximately 15 ms.

Check the specifications of any equipment which the HP 8657B is being used to test, to ensure that the calibration pulse will not cause any damage.

Related Instructions

Modulation, AM
Modulation, AM Up/Down
Modulation, External Source
Modulation, Mixed
Modulation, Off
Modulation, Pulse (Fast Mode)

Modulation, Pulse (Fast Mode)

Description

This instruction details how to select Pulse Modulation (Fast Mode).

Operating Characteristics:

On/Off Ratio: > 70 dB (0.1 to 1030 MHz)
> 95 dB (1030 to 2060 MHz)
Rise/Fall Time: < 50 ns, fc ≥1030 MHz
< 35 ns, fc <1030 MHz
Duty Cycle: 0 - 100%
Nominal Input Threshold: 1.6V

CAUTION

Maximum allowable input level is ±15 Vdc. Exceeding this limit may cause damage to the HP 8657B.

Keystroke Sequence

Press the SHIFT key then the ⇑ key below the AM function key. Connect the external modulation source to the PULSE INPUT. When the pulse waveform from the external source goes high, the pulse output from the HP 8657B turns on. Vary the external pulse rate, amplitude and width to simulate the pulse modulated signal you require.

Keys and Program Codes

Keys	Codes
FAST PULSE	PF

Indications

The PULSE annunciator lights.

Comments

The Pulse Input Impedance can be selected for 50 ohms or high impedance. The factory setting is high impedance. If you want to select 50 ohms, refer to paragraph 2-15.

CAUTION

For frequencies ≥1030 MHz, the HP 8657B performs a calibration on the output level when Pulse Modulation (Fast Mode) is first selected, or when the Amplitude or Frequency is modified with Pulse Modulation (Fast Mode) selected.

During this calibration, a calibration pulse appears at the RF OUTPUT for approximately 15 ms.

Check the specifications of any equipment which the HP 8657B is being used to test, to ensure that the calibration pulse will not cause any damage.

If the calibration pulse will cause damage, then select Pulse Modulation. However, in high cycle applications using frequencies ≥1030 MHz, this may reduce the life of the HP 8657B attenuator. This is because when the Amplitude or Frequency is changed when Pulse Modulation is selected, the HP 8657B performs a calibration on the output level. During this calibration the attenuator is switched in to prevent the calibration signal from appearing at the RF OUTPUT.

Refer to page 3-22 for more information about selecting the best mode of Pulse modulation for your application.

Related Instructions

Modulation, AM
Modulation, AM Up/Down
Modulation, External Source
Modulation, Mixed
Modulation, Off
Modulation, Pulse

Recall

Description

This instruction details how to recall a saved front-panel set-up.

Keystroke Sequence

Press the RECALL key, and then use the Data keys to recall the set-up you want.

Example

Recall the front-panel set-up saved in memory location 02.

LOCAL (keys)	RECALL	0	2
HP-IB (program codes)	RC 02		

Keys and Program Codes

Keys	Codes
RECALL)	RL

Indications

The front-panel set-up saved in memory location 02 is recalled and the HP 8657B output is changed to the new set-up.

Comments

You can save up to 100 (0-99) complete front-panel set-ups (exclusive of increment settings).

NOTE

If the Non-Volatile memory battery needs replaced (frequency displays shows CLEARING at power on), then you cannot use the recall feature. For information about the battery refer to Section 2.

To clear all your front-panel set-ups from memory, press and hold the ⇐ key at switch on. The FREQUENCY display will show CLEARING to confirm that the memory is being cleared.

Related Instructions

Display
Save
Sequence

RF ON/OFF

Description

This instruction details how to turn OFF and ON the carrier frequency at the RF OUTPUT of the HP 8657B.

Keystroke Sequence

Press the RF ON/OFF key.

Keys and Program Codes

Keys	Codes
RF OFF	R2
RF ON	R3

Indications

The AMPLITUDE Display, and Amplitude annunciators are blanked when RF ON/OFF is off. Pressing RF ON/OFF again turns on the RF and restores the AMPLITUDE Display and annunciators.

Comments

The RF ON/OFF key turns off the carrier frequency to the output without affecting the attenuators.

Performing this feature does not affect the current set-up.

Related Instructions

None

Save

Description

This instruction details how to save complete front-panel set-ups (exclusive of increment settings) in Non-Volatile Memory.

Keystroke Sequence

Press the SAVE key, then two Data keys sequentially to identify the memory location of the set-up.

Example

Save the current front-panel set-up in memory location 02.

LOCAL (keys)	SAVE	0	2
HP IB (program codes)	SV 02		

Keys and Program Codes

Keys	Code
Save	SV

Comments

You can save up to 100 (00-99) front-panel set-ups.

NOTE

If the Non-Volatile memory battery needs replaced (frequency displays shows CLEARING at power on), then you cannot use the recall feature. For information about the battery refer to Section 2.

To clear all your front-panel set-ups from memory, press and hold the ⇐ key at switch on. The FREQUENCY display will show CLEARING to confirm that the memory is being cleared.

Related Instructions

Display
Recall
Sequence

Sequence

Description

This instruction details how to recall a sequence of saved front-panel set-ups.

NOTE

To use this feature you must have saved the front-panel set-ups in consecutive memory locations.

Keystroke Sequence

Use the RECALL and DATA keys to recall the set-up you want the sequence to start at. Press the SEQ key to recall the next set-up.

Keys and Program Codes

Keys	Codes
SEQ	SQ

Indications

Each time you press the SEQ key, the next front-panel set-up is recalled and the HP 8657B is changed to the new set-up.

Comments

You can save up to 100 (0-99) complete front-panel setups (exclusive of increment settings).

NOTE

If the Non-Volatile memory battery needs replaced (frequency displays shows CLEARING at power on), then you cannot use the recall feature. For information about the battery refer to Section 2.

To clear all your front-panel set-ups from memory, press and hold the ⇐ key at switch on. The FREQUENCY display will show CLEARING to confirm that the memory is being cleared.

Related Instructions

Display
Display Sequence
Recall
Store

3-17. USER CONFIDENCE TESTS

The User Confidence Tests provide procedures to allow you to check that the HP 8657B is operating correctly. Two sets of tests are provided; Basic Functional Checks and HP-IB Functional Checks

3-18. BASIC FUNCTIONAL CHECKS

Description

This procedure requires a frequency counter, a spectrum analyzer, a power supply, and the interconnecting cables and adapters. It provides assurance that most of the front-panel controlled functions are being executed by the HP 8657B.

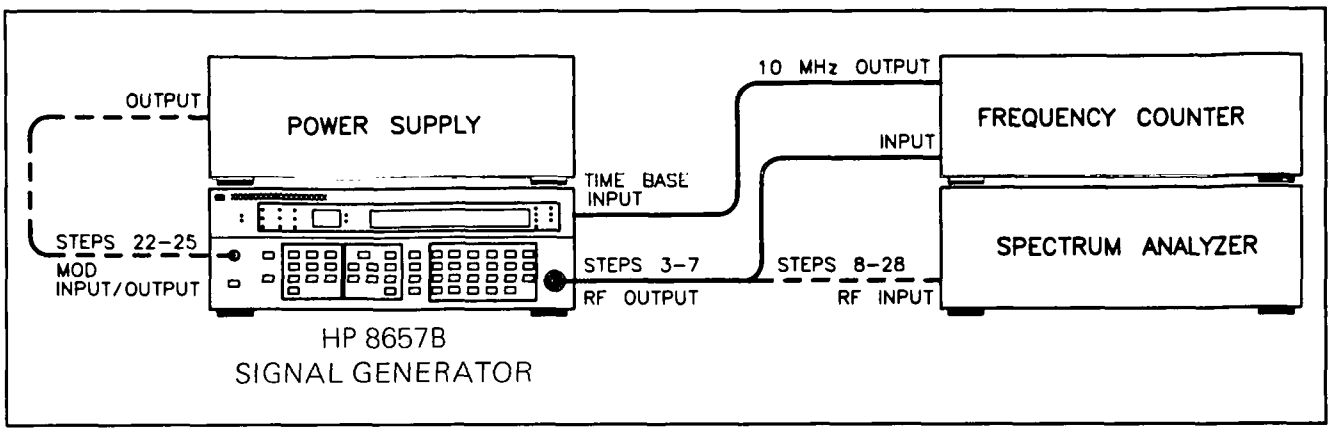

Figure 3-2. Test Setup for Basic Functional Checks

Equipment

Frequency Counter ..... HP 5328A Option 031
Spectrum Analyzer ..... HP 8668B/182T
Power Supply ..... HP 6235A

Procedure

1. Ensure that the power cable is plugged into a suitable source of Mains power (refer to paragraph 2-4).
2. Switch-on the HP 8657B by presing the POWER key. The HP 8657B automatically performs a self-test check at power on (this takes approximately 6 seconds). During this time all front panel indicators and displays will light.

   When the self-test is complete, the HP 8657B is set to the same conditions as when it was switched off.

   NOTE

   If the HP 8657B is switched off with RF ON/OFF set to OFF, then it will power-on with RF set to ON.

   If any of the self-tests fail at power-on, an error code is diplayed in the FREQUENCY window (see page 3-10). The error code remains displayed until any front panel key is pressed.
3. Connect the RF OUTPUT of the HP 8657B to the input of the frequency counter, and the 10 MHz reference output from the frequency counter to the TIME BASE INPUT located at the rear of the HP 8657B as shown in Figure 3-2.

   Connecting the 10 MHz reference output of the frequency counter to the TIME BASE INPUT of the HP 8657B phase locks the two instruments to the same time base reference.

NOTE

If the HP 8657B is equipped with the high stability time base (Option 001), disconnect its cable from the TIME BASE INPUT before performing this step.

Frequency Check

4. Set the output amplitude of the HP 8657B to −10.0 dBm and the carrier frequency to the values listed in the following table:

Carrier Frequency (MHz)
100.000000
140.000000
200.000000
300.000000
400.000000
600.000000
800.000000
990.000000
1040.000000
2060.000000

Verify that the FREQUENCY Display on the HP 8657B agrees with the frequency displayed on the frequency counter (except for the resolution of the frequency counter being used).

5. Set the carrier frequency of the HP 8657B to 111.111111 MHz and the frequency increment value to 111.111111 MHz. Leave the output amplitude set at − 10.0 dBm.

Verify that the FREQUENCY display on the HP 8657B agrees with the frequency displayed on the frequency counter.

6. Quickly press and release the frequency step-up key to increase the carrier frequency.

Verify that the FREQUENCY Display on the HP 8657B agrees with the frequency displayed on the frequency counter.

Continue to increase the carrier frequency to the maximum value listed in the following table:

Carrier Frequency (MHz)
111.111111
222.222222
333.333333
444.444444
555.555555
666.666666
777.777777
888.888888
999.999999
1111.111110

Verify that the FREQUENCY Display on the HP 8657B agrees with the frequency displayed on the frequency counter each time the carrier frequency is increased.

7. Quickly press and release the frequency step-down key to decrease the carrier frequency.

   Verify that the FREQUENCY Display on the HP 8657B agrees with the frequency displayed on the frequency counter.

   Continue to decrease the carrier frequency to the minimum value listed in the previous table.

   Verify that the FREQUENCY Display on the HP 8657B agrees with the frequency displayed on the frequency counter each time the carrier frequency is decreased.

Output Level Checks

8. Connect the RF OUTPUT of the HP 8657B to the input of the spectrum analyzer as shown in Figure 3-2.
9. Set the output amplitude of the HP 8657B to 0.0 dBm, carrier frequency to 0.1 MHz, and frequency increment value to 10 MHz.
10. Set the amplitude scale of the spectrum analyzer to display 1 dB/division, and make the necessary adjustments to properly display the output signal from the HP 8657B.

NOTE

This check only verifies level flatness, it does not verify absolute level accuracy.

11. Slowly increase the carrier frequency through its entire calibrated frequency range (0.1 to 2060 MHz) and observe the level displayed on the spectrum analyzer. The level should not vary more than a total of 2 dBm (±1.0 dB from 0.0 dBm).
12. Set the carrier frequency of the HP 8657B to 600 MHz, output amplitude to +13 dBm, and output amplitude increment value to 1.0 dB.
13. Adjust the spectrum analyzer as necessary to display the output signal from the HP 8657B. The displayed carrier should be positioned in the center of the graticule with its maximum level positioned near the top of the graticule.
14. Slowly decrease the output amplitude down to −4.0 dBm and observe the level displayed on the spectrum analyzer. The level should decrease in relatively uniform 1 dB steps.
15. Set the output amplitude of the HP 8657B to −10.0 dBm and the output amplitude increment value to 5 dB. Leave the carrier frequency set to 600 MHz.
16. Set the amplitude scale of the spectrum analyzer to display 10 dB/division and make the necessary adjustments to properly display the output signal from the HP 8657B. The displayed carrier should be positioned in the center of the graticule with its maximum level positioned near the top of the graticule.
17. Slowly decrease the output amplitude down to −80 dBm and observe the level displayed on the spectrum analyzer. The level should decrease in relatively uniform 5 dB steps.

FM Check

18. Set the output amplitude of the HP 8657B to 0.0 dBm. Leave the carrier frequency set to 600 MHz. Select FM with a peak deviation of 99 kHz using the internal 1 kHz source. Set the FM peak deviation increment value to 1 kHz.
19. Set the spectrum analyzer for a 50 kHz frequency span/division, a resolution bandwidth of 3 kHz, and a reference level of 0 dBm. The waveform displayed should be similar to that shown in Figure 3-3.

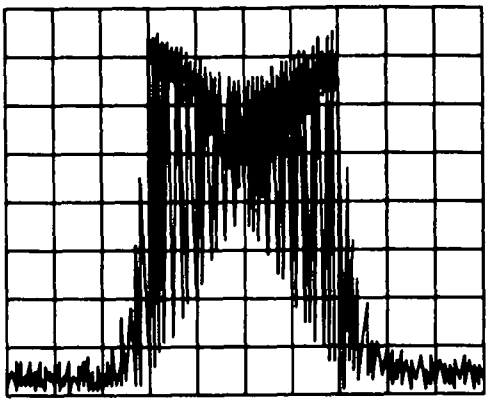

Figure 3–34. FM Functional Check Waveform

20. Slowly decrease the FM peak deviation to zero. The deviation displayed on the spectrum analyzer should decrease in relatively uniform steps.
21. Press FM, then OFF to turn off the FM function.

DC FM Check

22. Leave the output amplitude of the HP 8657B set to 0.0 dBm, and the carrier frequency set to 600 MHz. Select external DC FM with a peak deviation of 60 kHz.
23. Set the spectrum analyzer for a 200 kHz frequency span/division and a reference level of 0 dBm. Adjust the spectrum analyzer as necessary to display the output signal from the HP 8657B in the center of the display.
24. Connect a power supply to the MODulation INPUT/OUTPUT Connector of the HP 8657B as shown in Figure 3-2. Set the power supply for a +1 Vdc output and switch the voltage line on. Notice the LO EXT annunciator will remain on. The carrier frequency displayed on the Spectrum Analyzer should move three divisions to the right. The carrier frequency is offset by 60 kHz.
25. Press FM, then OFF to turn off the DC FM function.

AM Check

26. Leave the carrier frequency set to 600 MHz, and the output amplitude set to 0.0 dBm. Select AM with a depth of 50% using the internal 400 Hz source.
27. Set the spectrum analyzer to the linear amplitude mode. Set a frequency span/division of zero. Increase the resolution bandwidth, then fine tune for the maximum level of the demodulated signal. The displayed demodulated signal should be a sine wave with a period of 2.5 ms (400 Hz).
28. Press the INT 1 kHz key to change the frequency of the internal modulation source from 400 Hz to 1 kHz. The displayed demodulated signal should be a sine wave with a period of 1 ms (1 kHz).

3-19. HP-IB FUNCTIONAL CHECKS

Description

The following procedures check the HP 8657B's ability to recognize its own HP-IB (listen) address, properly make remote/local transitions, and process all the applicable HP-IB messages described in Table 3-7. During the process, all of the HP 8657B HP-IB data input/output bus, control, and handshake lines are checked, except for DIO8 (the most significant data input/output bus line which is not used by the HP 8657B). Only the HP 8657B, a bus controller, and an HP-IB interface with appropriate cabling are required to perform these procedures. The checks are intended to be as independent of one another as possible, since each begins with the HP 8657B being reset to its initialized condition. Nevertheless, it is suggested that the first four checks be performed in order before any other check. Any special initialization steps or requirements for a given check are provided at the beginning of the check.

The validity of these checks is based on the following assumptions:

- The HP 8657B performs properly when operated via the front-panel keys (that is, in local operation). This can be verified by performing the basic functional checks as outlined in paragraph 3-18.
- The bus controller properly executes HP-IB operations.
- The bus controller's HP-IB interface properly transfers the controller's instructions.
- The select code of the bus controller's interface is set to 7.
- The HP-IB address of the HP 8657B is set to 07 (the factory-set address).
- The select code address combination (that is, 707) is not necessary for these checks to be valid, however, the program lines presented in the following procedures would have to be modified for any other combination.

If the HP 8657B appears to fail any of the remote functional checks, the validity of the preceding assumptions should be confirmed before attempting to service the HP 8657B.

If all of these checks are performed successfully, the HP 8657B HP-IB capability can be considered to be operating properly. These procedures do not check whether or not all of the HP 8657B program codes are being properly interpreted and executed by the HP 8657B, however, if the front-panel operation is confirmed to be working properly and its HP-IB capability operates correctly, then there is a high probability that the HP 8657B will respond properly to all of its program codes.

Initial Setup

The test setup is the same for all of the checks. That is, the HP 8657B is connected to the bus controller through the bus controller's HP-IB interface via the appropriate cable.

Equipment

Use any HP Controller and HP-IB Interface to implement HP-IB functional checks.

Procedure

Address Recognition

This check determines whether or not the HP 8657B recognizes when it is being addressed and when it is not. It is assumed that the HP 8657B is in local operation and that it can properly handshake on the bus. Before beginning this check, verify that the HP 8657B is in local operation and unaddressed by the controller.

Description	BASIC
Set the Remote Enable (REN) bus control line false.	LOCAL 7
Send the listen address to the HP 8657B.	OUTPUT 707

1. Verify that the HP 8657B RMT annunciator remains off, and that its ADRS annunciator lights.

Description	BASIC
Unaddress the HP 8657B by sending a different address.	OUTPUT 715

2. Verify that the HP 8657B RMT and ADRS annunciators are both off.

Remote and Local Messages and the LOCAL Key

This check determines whether the HP 8657B properly switches from local to remote operation, switches from remote to local operation, and whether the LOCAL key can return the HP 8657B to local operation. It is assumed that the HP 8657B is able to both handshake and recognize its own address. Before beginning this check verify that the HP 8657B is in local operation and unaddressed by the controller.

Description	BASIC
Send the Remote message which sets the Remote Enable (REN) bus control line true and addresses the HP 8657B to listen.	REMOTE 707

1. Verify that the HP 8657B RMT and ADRS annunciators both light.

Description	BASIC
Send the Local message to the HP 8657B.	LOCAL 707

2. Verify that the HP 8657B RMT annunciator turns off, and that its ADRS annunciator remains on.

Description	BASIC
Send the Local message to the HP 8657B.	REMOTE 707

3. Verify that the HP 8657B RMT and ADRS annunciators are both on. Press the LOCAL key on the front-panel of the HP 8657B and verify that the RMT annunciator turns off, and that the ADRS annunciator remains on.

Data Message

This check determines whether or not the HP 8657B properly receives Data messages. Because the HP 8657B is only a listener, it can only receive Data messages, but never send them. It is assumed that the HP 8657B is able to handshake, recognize its own address, and properly make remote/local transitions. The Data message that is sent will cause the 7 least significant HP-IB data lines to be placed in both their true and false states. Before beginning this check, verify that the HP 8657B is in local operation and unaddressed by the controller.

Description	BASIC
Send first part of the Remote message (enables the HP 8657B remote operating mode).	REMOTE 707
Address the HP 8657B to listen (which completes the Remote message) and send the Data message (which tunes the HP 8657B to 1040 MHz).	OUTPUT 707; "FR1040MZ"

1. Verify that the HP 8657B RMT and ADRS annunciators both light, and that the FREQUENCY Display shows a carrier frequency of 1040.0000 MHz.

Local Lockout and Clear Lockout/Set Local Messages

This check determines whether or not the HP 8657B properly receives the Local Lockout message which disables all of the front-panel keys. In addition, this check determines whether or not the Clear Lockout/Set Local message is properly received and executed by the HP 8657B. It is assumed that the HP 8657B is able to handshake, recognize its own address, and properly make remote/local transitions. Before beginning this check, verify that the HP 8657B is in local operation and unaddressed by the controller.

Description	BASIC
Send first part of the Remote message (enables the HP 8657B remote operating mode).	REMOTE 707
Send the Local Lockout message.	LOCAL LOCKOUT 7
Address the HP 8657B to listen (completes the Remote message).	OUTPUT 707

1. Verify that the HP 8657B RMT and ADRS annunciators both light. Press the LOCAL key on the front-panel of the HP 8657B, and verify that its RMT and ADRS annunciators both remain on.

Description	BASIC
Send the Clear Lockout/Set Local Message.	LOCAL 7

2. Verify that the HP 8657B RMT annunciator is turned off, and that its ADRS annunciator remains on.

Clear Message

This check determines whether or not the HP 8657B properly responds to the Clear message. It is assumed that the HP 8657B is able to handshake, recognize its own address, properly make remote/local transitions, and receive Data messages. Before beginning this check, verify that the HP 8657B is in local operation, and unaddressed by the controller.

Description	BASIC
Send first part of the Remote message (enables the HP 8657B remote operating mode).	REMOTE 707
Address the HP 8657B to listen (which completes the Remote message) and send the Data message (which sets the output amplitude of the HP 8657B to 3.0 dB mV).	OUTPUT 707; "AP03DBMV"

1. Verify that the HP 8657B RMT, ADRS, dB, and mV annunciators all light, and that the AMPLITUDE Display shows an output amplitude of 3.0 dBmV.

Description	BASIC
Send the Clear message.	CLEAR 707

2. Verify that the HP 8657B RMT and ADRS annunciators remain on, and that the AMPLITUDE Display now shows frequency as 100 MHz and amplitude as −143.5 dBm. The dB and mV annunciators will now be off and the dBm annunciator will be on.

Abort Message

This check determines whether or not the HP 8657B becomes unaddressed when it receives the Abort message. It is assumed that the HP 8657B is able to handshake, recognize its own address, and properly make remote/local transitions. Before beginning this check, verify that the HP 8657B is in local operation and unaddressed by the controller.

Description	BASIC
Send the complete Remote message.	REMOTE 707

1. Verify that the HP 8657B RMT and ADRS annunciators both light.

Description	BASIC
Send the Abort message (which unaddresses the HP 8657B to listen.)	ABORTIO 7

2. Verify that the ADRS and RMT annunciators turn off.

Section 4
PERFORMANCE TESTS

4-1. INTRODUCTION

The procedures in this section test the HP 8657B electrical performance using the specifications of Table 1-1 as the performance standards. All tests can be performed without access to the interior of the instrument. A simpler operational test is included in Section 3 under User Confidence Tests.

NOTE

If the performance tests are to be considered valid, the following conditions must be met:

a. The HP 8657B must have a 30-minute warmup.

b. The line voltage must be 100, 120, 220, or 240 Vac (+5%, −10%) from 48 to 440 Hz. The Voltage Selector Cam must be in the proper position. Refer to Figure 2-1.

c. The ambient temperature must be 0 to 55° C for the Level Accuracy and Flatness Test.

4-2. EQUIPMENT REQUIRED

Equipment required for the performance tests is listed in Table 1-2, Recommended Test Equipment. Any equipment that satisfies the critical specifications given in the table may be substituted for the recommended model(s).

4-3. PERFORMANCE TEST RECORD

You can record the results of the performance tests in the Performance Test Record, located at the end of this section. The Test Record lists all of the tested specifications and their acceptable limits. The results recorded at incoming inspection can be used for comparison in periodic maintenance and troubleshooting and after repairs or adjustments.

4-4. CALIBRATION CYCLE

The HP 8657B requires periodic verification of performance. Depending on the use and environmental conditions, the HP 8657B should be checked using the following performance tests at least once each year.

4-5. ABBREVIATED PERFORMANCE TESTING

In most cases, it is not necessary to perform all of the tests in this section. Table 4-1 shows which tests are recommended for various situations. The User Confidence Tests in Section 3 should be the first step in all testing situations.

4-6. TEST PROCEDURES

It is assumed that if you are performing the following tests, that you know how to operate the specified test equipment. Equipment settings, other than those for the HP 8657B, are stated in general terms. For example, a test might require that a spectrum analyzer's resolution bandwidth be set to 100 Hz; however, the time per division setting would not be specified and you would set that control so that the analyzer operates correctly.

It is also assumed that you will supply whatever cables, connectors, and adapters are necessary.

Table 4–1. Abbreviated Performance Tests

Testing Situations		Section 3 Confidence Tests		Performance Test Number and Name				
				1	2	3	4	5
		Basic	HP-IB	Spectral Purity	Output Level Accuracy And Flatness	Modulation	Output Leakage	SWR
Incoming Inspection or Overall Performance Verification		X	X	X	X	X	X	X
After Complete Adjustment		X		X	X	X	X	X
After Repairs to Assembly:	Reference Service Sheet No.							
A1	21	X						
A2	21-23	X						
A3A1	9	X		X		FM		
A3	9	X						
A3	10	X		X		FM		
A3	11	X		X				
A3	12	X		X				
A3	13	X		X		FM		
A3	14	X		X		FM		
A3	15	X		X		FM		
A3	16	X		X				
A4	1	X		X				
A4	2	X		X				
A6	4	X		X	X	AM		
A6	5	X		X	X			
A7	9	X		X				
A8	3	X		X				
A9	8	X		X	X		X	X
A10	8	X						
A11	6-7	X			X	X		
A13	17-20	X	X		X	X		
A15	24	X						
A16	16	X						
FL1	3	X		X				

Performance Test 1

SPECTRAL PURITY TESTS

- **Spurious Signals**
- **Residual AM**
- **Residual FM**
- **SSB Phase Noise (1 Hz Bandwidth)**

Specifications

Electrical Characteristics	Performance Limits	Conditions
Spurious Signals:		
Harmonics		≤ +7 dBm output levels
	< −30 dBc	0.1 to 1030 MHz
	< −25 dBc	1030 to 2060 MHz
Non-harmonics		> 5 kHz to 2 MHz from carrier in CW mode
	< −63 dBc	0.1 to 130 MHz
	< −75 dBc	130 to 260 MHz
	< −66 dBc	260 to 520 MHz
	< −63 dBC	520 to 1030 MHz
	< −57 dBC	1030 to 2060 MHz
		≥ 2 MHz from carrier in CW mode
	< −60 dBC	0.1 to 1030 MHz
	< −54 dBC	1030 to 2060 MHz
Sub-harmonics	None	0.1 to 1030 MHz
	< −40 dBC	1030 to 1800 MHz
	< −35 dBC	1800 to 2060 MHz
Residual Modulation CW Mode:		
AM (0.5 to 15 kHz Post Detection Noise Bandwidth)	< 0.04%	0.1 to 2060 MHz
FM (0.3 to 3 kHz Post Detection Noise Bandwidth)	< 4 Hz rms	0.1 to 130 MHz
	< 1 Hz rms	130 to 260 MHz
	< 2 Hz rms	260 to 520 MHz
	< 3 Hz rms	520 to 1040 MHz
	< 6 Hz rms	1040 to 2060 MHz
FM (0.05 to 15 kHz Post Detection Noise Bandwidth)	< 6 Hz rms	0.1 to 130 MHz
	< 1.5 Hz rms	130 to 260 MHz
	< 3 Hz rms	260 to 520 MHz
	< 4 Hz rms	520 to 1040 MHz
	< 8 Hz rms	1040 to 2060 MHz
SSB Phase Noise		20 kHz offset from carrier
	< −124 dBc/Hz	0.1 to 130 MHz
	< −136 dBc/Hz	130 to 260 MHz
	< −130 dBc/Hz	260 to 520 MHz
	< −124 dBc/Hz	520 to 1040 MHz
	< −118 dBc/Hz	1040 to 2060 MHz

Description

Spurious signals are checked using a spectrum analyzer. Residual AM and FM Modulation are checked to 1300 MHz using a measuring receiver. SSB phase noise is measured to 1600 MHz using a phase noise measurement system.

Equipment

Spectrum Analyzer ..... HP 8562B or HP 8555A/8552B/141T (Harmonics/Spurious Tests)
Measuring Receiver ..... HP 8902A (Option 003 for Optional Residual FM Tests)
Sensor Module ..... HP 11722A
Digital Multimeter ..... HP 3466A
AM/FM Test Source ..... HP 11715A
Cable (UG-21D/U type N connectors) ..... HP 11500B
Cable (UG-88C/U BNC and dual banana plug connectors) ..... HP 11001-60001
Synthesized Signal Generator/(LO for Optional Residual FM Test) ..... HP 8662A
Phase Noise Measurement System ..... HP 3048A

Procedure

Spurious Signals Test

1. Set the spectrum analyzer as follows:

   Center Frequency ..... 100 kHz
   Frequency Span ..... 30 kHz
   Resolution Bandwidth ..... 300 Hz
   Reference Level ..... +7 dBm

2. Set the HP 8657B as follows:

   Frequency ..... 100 kHz
   Frequency Increment ..... 100 kHz
   Amplitude ..... +7 dBm
   Modulation ..... Off

3. Connect the RF OUTPUT of the HP 8657B to the input of the spectrum analyzer as shown in Figure 4-1. Verify that all harmonics are < −30 dBc 0.1 to 1030 MHz, all harmonics are < −25 dBc 1030 to 2060 MHz, all non-harmonics 2 MHz from the carrier are < −60 dBc 0.1 to 1030 MHz, all non-harmonics 2 MHz from the carrier are < −54 dBc 1030 to 2060 MHz, all non-harmonics 5 KHz to 2 MHz from carrier are < −72 dBc, < −66 dBc, < −60 dBc, < −54 dBc for each frequency band shown in the table, there are no sub harmonics as the frequency is incremented from 100 kHz to 1030 MHz and sub harmonics are < −45 dBc as the frequency is incremented from 1030 to 1800 MHz, and are < −35 dBc as the frequency is incremented from 1800 to 2060 MHz.

Spurious Signals	Results	
	Actual	Max.
Harmonics	_____	< − 30 dBc, 0.1 to 1030 MHz
	_____	< − 25 dBc, 1030 to 2060 MHz
Non-Harmonics	_____	< − 60 dBc, 0.1 to 1030 MHz
(≥ 2 MHz from carrier)	_____	< − 54 dBc, 1030 to 2060 MHz
5 kHz to 2 MHz from carrier	_____	< − 63 dBc, 0.1 tp 130 MHz
	_____	< − 75 dBc, 130 to 260 MHz
	_____	< − 66 dBc, 260 to 520 MHz
	_____	< − 63 dBc, 520 to 1030 MHz
	_____	< − 57 dBc, 1030 to 2060 MHz
Sub-Harmonics	_____	None, 0.1 to 1030 MHz
	_____	< − 40 dBc, 1030 to 1800 MHz
	_____	< − 35 dBc, 1800 to 2060 MHz

NOTE

Adjust the Center Frequency, Frequency Span, and Resolution Bandwidth controls as required.

Change the frequency increment from 100 kHz to 10 MHz at 10 MHz, if desired.

4. Verify the residual AM of the measuring receiver as follows:

   a. Connect the modulation output of the measuring receiver to the input of the digital multimeter and the AM output of the AM/FM test source to the input of the measuring receiver as shown in Figure 4-2. Nothing should be connected to the audio input of the AM/FM test source.

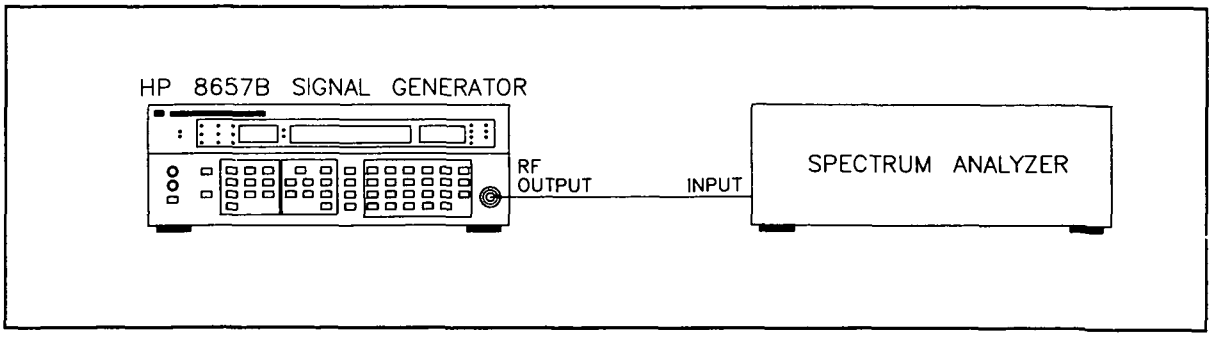

Figure 4–1. Spurious Signals Test Setup

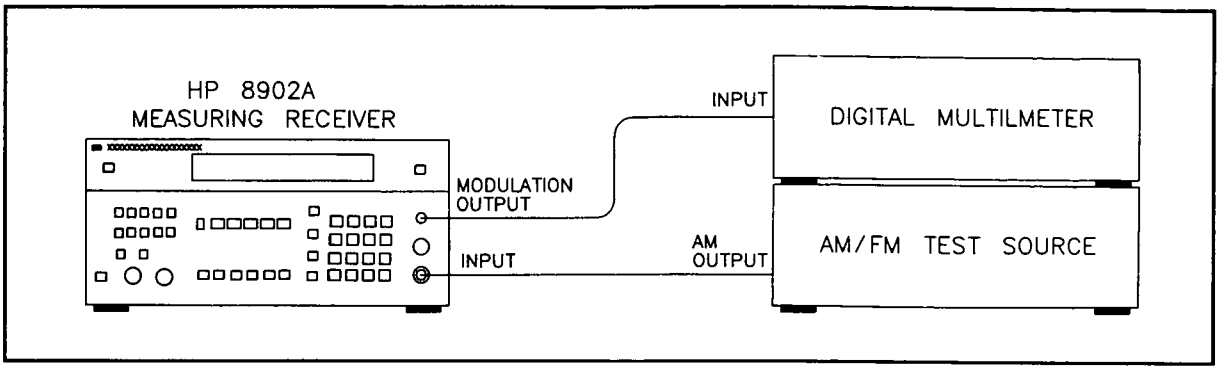

Figure 4–2. Measuring Receiver Residual AM Verification Test Setup

Residual AM

NOTE

The residual AM specification of the HP 8657B is not equivalent to the published specification of the HP 8902A Measuring Receiver. To make a valid residual AM measurement, the residual AM of the measuring receiver should be at least 3 dB better than the specification being tested. The residual AM of the Measuring Receiver must be verified to be adequate to measure the HP 8657B residual AM specification to ensure the validity of the measurement. If residual AM is measured frequently, it is not necessary to verify the residual AM of the measuring receiver each time; however, it is recommended that it be verified monthly to ensure an accurate measurement.

b. Set the measuring receiver as follows:

Measurement ..... Frequency

c. Set the AM/FM test source as follows:

Test Mode ..... FM

d. Tune the carrier frequency on the AM/FM test source for a measuring receiver reading of 12.5 ±0.1 MHz.

e. Set the digital multimeter as follows:

Function ..... Vac
Range ..... 200 mV

f. Set the measuring receiver as follows:

Measurement ..... AM
HP Filter ..... 50 Hz
LP Filter ..... 15 kHz

g. The digital multimeter should indicate 3.28 mV or less.

NOTE

To make a valid residual AM measurement, the residual AM of the measuring receiver should be at least 3 dB better than the specification being tested or 0.028%. With an output sensitivity of 10%/V, the corresponding output level is 2.80 mV.

5. Set the measuring receiver as follows:

   Measurement ..... AM
   Detector ..... Peak+
   HP Filter ..... 50 Hz
   LP Filter ..... 15 kHz
   FM De-Emphasis ..... Off

6. Set the HP 8657B as follows:

   Frequency ..... Any
   Amplitude ..... 0.0 dBm
   Modulation ..... Off

7. Set the digital multimeter as follows:

   Function ..... Vac
   Range ..... 200 mV

8. Connect the RF OUTPUT of the HP 8657B to the input of the measuring receiver and the modulation output of the measuring receiver to the input of the digital multimeter as shown in Figure 4-3.

9. The digital multimeter should indicate <4.00 mVrms.

Actual	Maximum
_____	< 4.00 mVrms

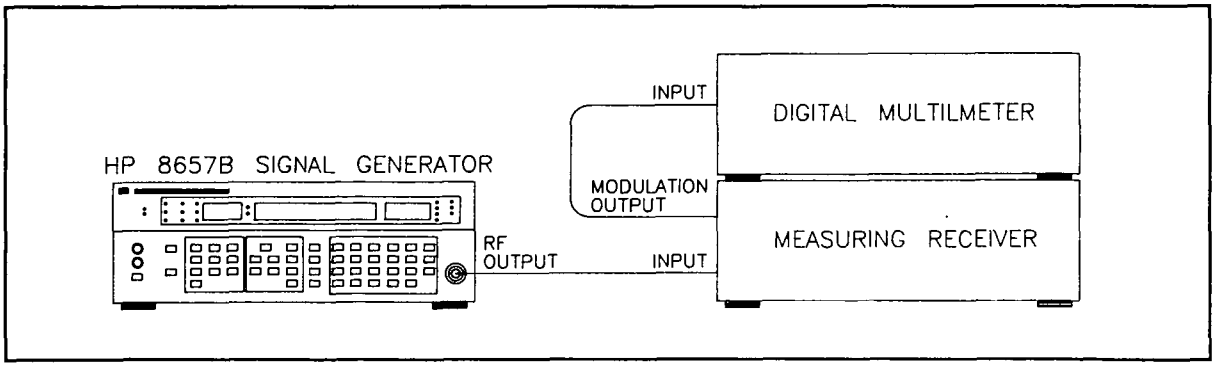

Figure 4–3. Residual AM Test Setup

Residual FM

NOTE

A standard HP 8902A can be used to verify the residual FM specifications in the heterodyne band of frequencies. Tests performed at these frequencies will verify that in all probability, the instrument meets its specifications. If the HP 8657BA has been repaired or the heterodyne band of frequencies do not pass, the Optional Residual FM Test (steps 10a-13a) should be performed.

10. Set the measuring receiver as follows:

    Measurement ..... FM
    Detector ..... RMS
    FM De-Emphasis ..... Off
    Automatic Operation ..... Selected

11. Set the HP 8657B under test as follows:

    Frequency ..... Any From Chart
    Amplitude ..... 0.0 dBm
    Modulation ..... Off

12. Connect the RF OUTPUT of the HP 8657B under test to the input of the measuring receiver as shown in Figure 4-4.

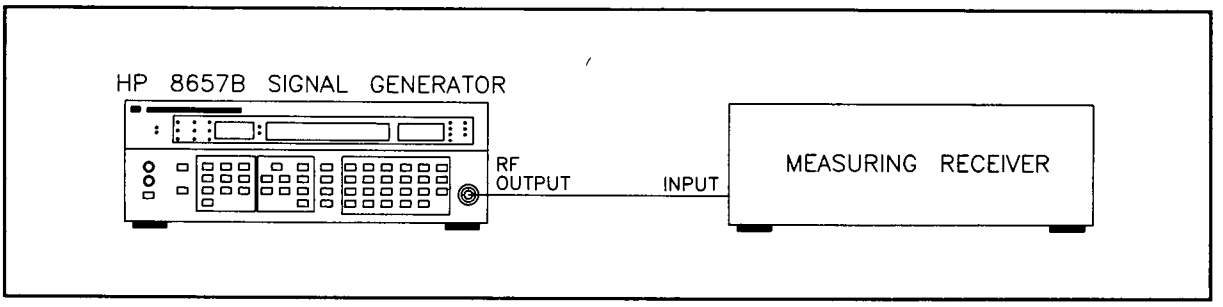

Figure 4–4. Residual FM Test Setup

13. Set the HP 8657B frequency and select the measuring receiver high-pass and low-pass filters as indicated in the following table. Verify that the measured results do not exceed the limits specified.

HP 8657B Frequency (MHz)	Modulation Analyzer Filter		Results (Hz rms)	
	High Pass (Hz)	Low Pass (kHz)	Actual	Max.
0.15 to 129.99999	300	3	_____	< 4
0.15 to 129.99999	50	15	_____	< 6

Optional Residual FM Test

The Residual FM Test gives confidence that the HP 8657B is passing all its Residual FM specifications. The Residual FM of the HP 8657B can be checked at all frequencies to 1300 MHz with an HP 8902A Option 003 and an external local oscillator (LO). The residual FM of the external LO must be less than the residual FM of the HP 8657B under test.

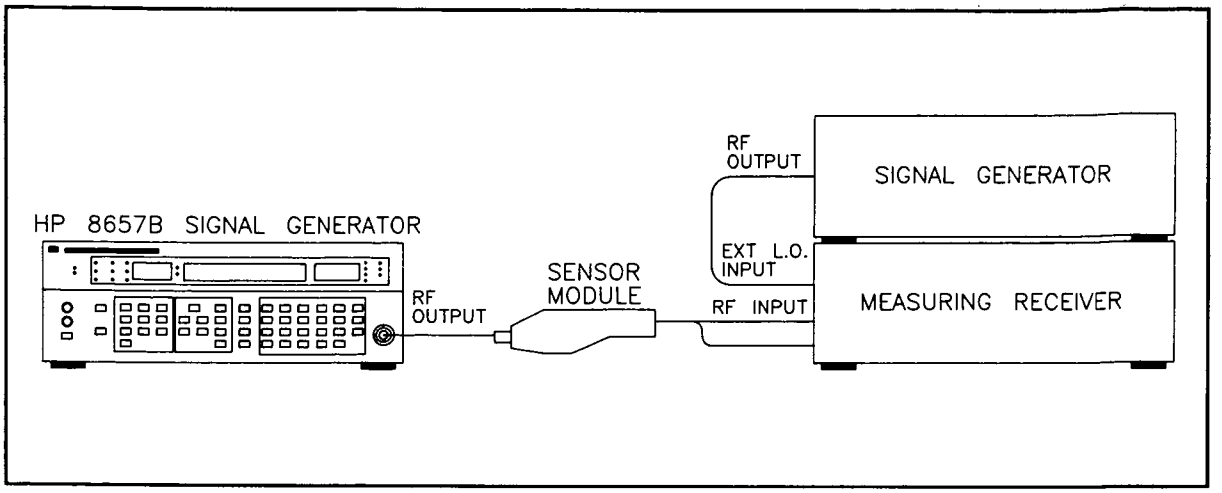

Figure 4–4a. Optional Residual Test Setup

10a. Set the measuring receiver as follows:

Measurement ..... FM
Detector ..... RMS
FM De-Emphasis ..... Off
Automatic Operation ..... Selected

11a. Set the HP 8657B under test and the LO Signal Generator as follows:

Frequency ..... Any From Chart
Amplitude ..... 0.0 dBm
Modulation ..... Off

12a. Connect the test equipment as shown in Figure 4-4a.

13a. Set frequency on the Test HP 8657B and the LO Signal Generator and select the measuring receiver high-pass and low-pass filters as indicated in the following table. Verify that the measured results do not exceed the limits specified.

Optional Residual FM Test Specifications

Test HP 8657B Frequency (MHz)	LO Signal Generator Frequency (MHz)	Modulation Analyzer Filter		Results (Hz rms)	
		High Pass (Hz)	Low Pass (kHz)	Actual	Max.
245	246.5	300	3	_____	< 1
410	411.5	300	3	_____	< 2
775	776.5	300	3	_____	< 3
1300	1301.5	300	3	_____	< 6
245	246.5	50	15	_____	< 1.5
410	411.5	50	15	_____	< 3
775	776.5	50	15	_____	< 4
1300	1301.5	50	15	_____	< 8

SSB PHASE NOISE (1 HZ BANDWIDTH)

Description

Single-sideband (SSB) phase noise of the HP 8657B is measured at the offset frequency of 20 KHz and output frequencies to 1600 MHz by the HP 3048A Phase Noise System using its Phase Lock Loop measurement type. The system software provides both the measurement program and the BASIC operating system for the controller. This procedure provides the steps for entering the specific measurement parameters required for this test.

NOTE

This test measures the total SSB phase noise of both generators. This test assumes that the noise level of the reference source you are using is lower than or equal to the noise level of the HP 8657B being tested. If the reference source's phase noise level is equal to the HP 8657B's, the actual noise level for both sources is 3 dB below the level measured by the HP 3048A.

1. The HP 3048's BASIC operating system and system software must be loaded, the HP 8657B's HP-IB address entered, and system operation verified before this test is run. Refer to the HP 3048A Phase Noise Measurement System Operating Manual, Appendix A for the required procedures.
2. If you are not at the HP 3048A's Main Software Level, press the **Done** or **Abort** Softkey. The Main Software Level menu provides access to each of the HP 3048's main functions. You will always return to this menu when you exit the selected function.

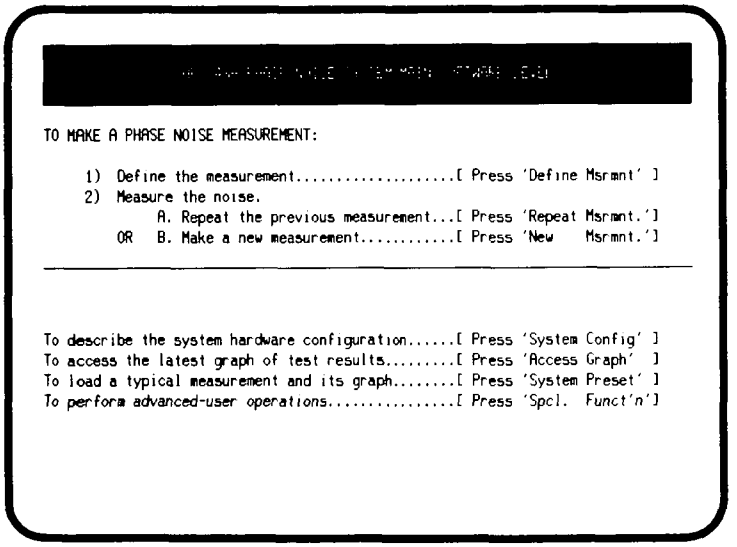

Defining the Measurement

3. Press the **Define Msrmt** Softkey to display the Measurement Definition Menu.
4. Press the **Test Files** softkey.
5. Position the curser at the file labeled HP EXAMPLE RF SYNTHESIZER (8662/3 DCFM).
6. Press the **Load File** key. After the HP 3048A has completed the file loading sequence, press the **Done** key.

NOTE

This example file contains many of the measurement parameters required for this test. Table 4-2 lists the paramaters that have been loaded from this file. The following steps will guide you through the process of making the necessary changes to the parameters to meet the specific requirements of this test.

7. Press the **Instr Params** key. Enter a carrier frequency of 640 E+6 Hz. Enter a Detector/Disc. Input frequency of 640 E+6 Hz. Enter a VCO Tuning Constant of 1 E+3 Hz/volt. Enter the Voltage Tuning Range of VCO as 5 volts. The remaining entries do not need to be changed. Press the **Done** key.
8. Press the **Calibr Process** key. Press the **Tuning Const** key to select Compute from expected T. Constant. Press the **Done** key.
9. Press the **Source Control** key. Press the **Ref. Source** key as needed to select 8657B SYSTEM CNTRL. Press the **Done** key when you have completed this operation.

NOTE

The HP 8657B under test is configured as the reference source in this display to enable the HP 3048A to control it using control routines built into the HP 3048A's software. The measurement results will still reflect the noise level of the HP 8657B under test. If you are not able to select the HP 8657B as the reference source using the Ref. Source key, then the HP 8657B has not yet been entered into the HP 3048A's Configuration Table. To enter the HP 8657B, return to the Main Software Menu and press the **System Config** *key.*

10. Press the **Define Graph** key. Enter an appropriate graph title for your test. Press the **Done** key to exit this menu, and then press the **Done** key again to return to the Main Software level.

Beginning the Measurement

11. Press the **New Msrmnt** key to begin the phase noise measurement.
12. When the hardware connect diagram appears in the display, connect the HP 8657B and reference source to the HP 3048A as shown. (Note that the reference source is labeled USERS's DUT on the screen. Figure 4-5 also shows the cable connections for this measurement.)
13. Adjust the reference source's center frequency to 640 MHz and its amplitude to 0 dBm. (The HP 8657B's setting will be adjusted by the HP 3048A via its HP-IB connection.)

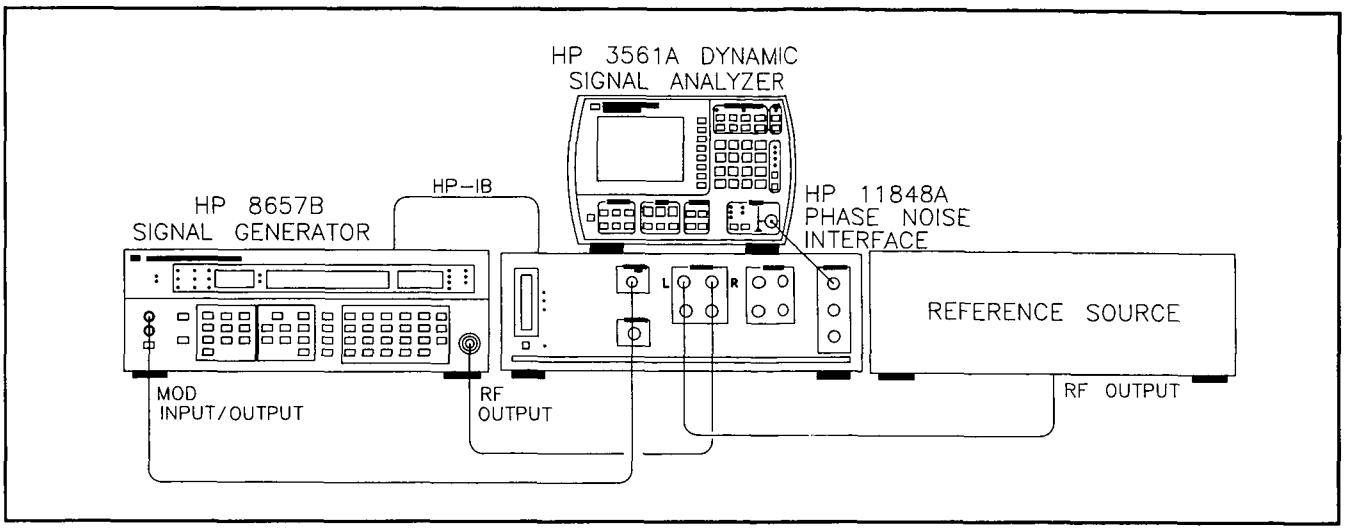

Figure 4–5. Setup Diagram for SSB Phase Noise Measurement

14. After you have connected the cables, press the **Proceed** key to run the measurement. (If you wish to measure the phase noise level of the HP 8657B at other center frequency settings after this test is completed, change the center frequency on the reference source to the desired frequency. Enter the desired frequency as the carrier frequency and detector/disc input frequency in the Source and Interface Parameter Entry menu.)

NOTE

If the noise level measured by the HP 3048A exceeds the HP 8657B's specified noise level and the exact noise level of the reference source is not known, the exact level of each source should be determined by measuring each source against a third signal source and comparing the measurement results for all three measurements.

15. The Measured SSB Phase Noise should be at or below the specified value.

Offset from Carrier	SSB Phase Noise		Carrier Frequency (MHz)
	Min.	Actual	
20 kHz	–124 dBc/Hz	_____	0.1 to 129
	–136 dBc/Hz	_____	130 to 260
	–130 dBc/Hz	_____	260 to 520
	–124 dBc/Hz	_____	520 to 1040
	–118 dBc/Hz	_____	1040 to 1600

Table 4–2. Parameter Data Loaded from HP Example RF Synthesizer (HP 8662/3 DCFM file)

Parameters	Data
Measurement Type	Phase Noise Using a Phase Lock Loop
Frequency Range	
Start Freq.	1 Hz
Stop Freq.	100 E + 3 Hz
Averages	4
Source Parameters	
Carrier Frequency	500 E + 6 Hz
Detector/Discr. Input Frequency	500 E + 6 Hz
VCO Tuning Constant	25 E + 3 Hz/V
Center Voltage of VCO Tuning Curve	0 Volts
Voltage Tuning Range of VCO	±2 Volts
VCO Tune-Port Input Resistance	600 ohms
Internal Phase Detector	5 MHz to 1600 MHz
Phase Detector Constant	Measure the Detector Constant
VCO Tuning Constant	Measure the VCO Tuning Constant
PLL Suppression	Will be verified
Source Control	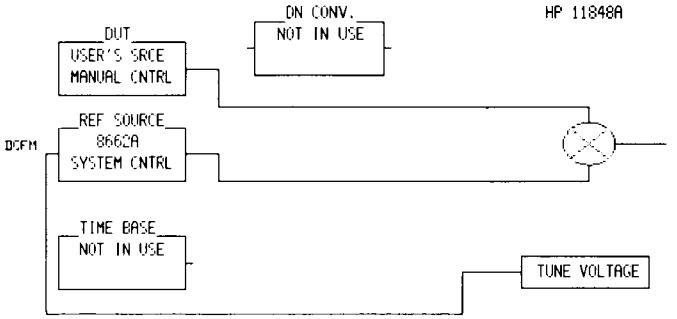
Define Graph	
Title	RF SYNTHESIZER VERSUS HP 8662/3A USING DC FM.
Minimum X	1 Hz
Maximum X	100 E + 3 Hz
Minimum Y	−170
Maximum Y	0
Graph Type	Single Sideband Phase Noise (dBc/Hz)

Performance Test 2

OUTPUT LEVEL ACCURACY AND FLATNESS TESTS

- **Level Flatness**
- **Absolute Level Accuracy**

Specifications

Electrical Characteristics	Performance Limits	Conditions
Output		
Level Range (into 50 ohms)	+13 dBm to −143.5 dBm +10 dBm to −143.5 dBm	100 kHz to 2060 MHz Opt 003
Resolution	0.1 dB	
Absolute Level Accuracy (1)	≤ ±1.0 dB	Output levels of +3.5 dBm to −127 dBm
	< ±1.5 dB	> +3.5 dBm
Level Flatness	≤ ±0.5 dB	Output level setting of 0.0 dBm; frequencies from 100 kHz to 2060 MHz

(1) Absolute level accuracy includes allowances for detector linearity, temperature, flatness, attenuator accuracy, and measurement errors.

Description

Output level accuracy and flatness are verified using a measuring receiver and a sensor module.

Equipment

Measuring Receiver ..... HP 8902A
Sensor Module ..... HP 11722A

Procedure

Level Flatness

1. Connect the sensor module to the measuring receiver. Zero and calibrate the sensor module and measuring receiver.
2. Connect the sensor module to the HP 8657B as shown in Figure 4-6.

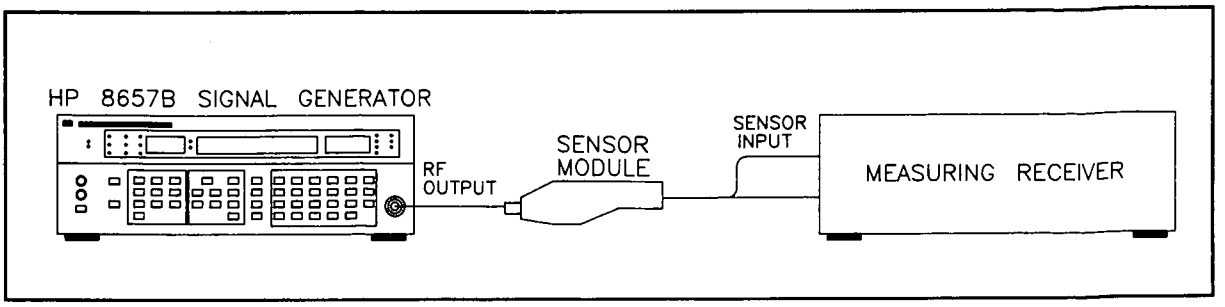

Figure 4–6. Output Level Accuracy and Flatness Test Setup

3. Set the measuring receiver as follows:

   Measurement ..... RF POWER
   Display ..... LOG
   Frequency .....100 MHz

4. Set the HP 8657B as follows:

   Frequency..... 100 kHz
   Amplitude..... 0.0 dBm
   Modulation.....Off

5. Wait for the power measurement to settle and then select DISPLAY RATIO on the measuring receiver to set a 0.0 dB. reference.

6. Set a Frequency Increment value on the Measuring Receiver and HP 8657B according to the frequency band of the measurements. Frequency Increment on the measuring receiver is set by entering the numeric value in kHz and pressing the kHz (up or down) keys. Upon entering that value the measuring receiver will also change the center frequency by that amount, the HP 8657B should be stepped to match. Use increments of 100 kHz (100 kHz to 1 MHz), 1 MHz (1 MHz to 10 MHz), 10 MHz (10 MHz to 100 MHz), 100 MHz (100 MHz to 2000 MHz), and 60 MHz (2000 MHZ to 2060 MHz).

7. Step the HP 8657B and measuring receiver through the frequency range of 100 kHz to 2060 MHz. Record the highest and lowest power levels and their frequencies and calculate the maximum variation.

   _____ Highest Reading _____ Frequency

   _____ Lowest Reading _____ Frequency

   The amplitude variation should not exceed 1.0 dB. Record the maximum variation (highest reading – lowest reading).

   _____ <1.0 dB

8. Step the HP 8657B and measuring receiver through the frequency range of 3 MHz to 1300 MHz. Record the highest and lowest reading to be used in the Absolute Level Accuracy test below.

   _____ Highest Reading _____ Test Frequency 1

   _____ Lowest Reading _____ Test Frequency 2

Absolute Level Accuracy

9. Set the HP 8657B as follows:

Frequency ..... From Step 8
Amplitude ..... +13 dBm
Amplitude Increment ..... 5 dBm
Modulation ..... Off

10. Set the measuring receiver as follows:

Measurement ..... RF POWER

11. Absolute Level Accuracy must be tested on the HP 8657B using the frequencies from step 8. Begin decrementing the HP 8657B amplitude in 5 dB steps. At each step, the measuring receiver reading must be within the tolerances shown in the following Table, RF Output Frequencies. Step the amplitude down to −2 dBm. Change the measuring receiver's measurement to TUNED RF LEVEL. If RECAL or UNCAL is displayed press and release the CALIBRATE key. Continue to step the amplitude down to −127 dBm; and each time RECAL is displayed press and release the CALIBRATE key.

RF Output Test Frequency 1 _____
(+13 dBm will not apply to all options)

Amplitude Setting (dBm)	Minimum (dBm)	Actual (dBm)	Maximum (dBm)
+13.0	+11.5	_____	+14.5
+8.0	+6.5	_____	+9.5
+3.0	+2.0	_____	+4.0
−2.0	−3.0	_____	−1.0
−7.0	−8.0	_____	−6.0
−12.0	−13.0	_____	−11.0
−17.0	−18.0	_____	−16.0
−22.0	−23.0	_____	−21.0
−27.0	−28.0	_____	−26.0
−32.0	−33.0	_____	−31.0
−37.0	−38.0	_____	−36.0
−42.0	−43.0	_____	−41.0
−47.0	−48.0	_____	−46.0
−52.0	−53.0	_____	−51.0
−57.0	−58.0	_____	−56.0
−63.0	−63.0	_____	−61.0
−67.0	−68.0	_____	−66.0
−72.0	−73.0	_____	−71.0
−77.0	−78.0	_____	−76.0
−82.0	−83.0	_____	−81.0
−87.0	−88.0	_____	−86.0
−92.0	−93.0	_____	−91.0
−97.0	−98.0	_____	−96.0
−102.0	−103.0	_____	−101.0
−107.0	−108.0	_____	−106.0
−112.0	−113.0	_____	−111.0
−117.0	−118.0	_____	−116.0
−122.0	−123.0	_____	−121.0
−127.0	−128.0	_____	−126.0

RF Output Test Frequency 2 _____
(+13 dBm will not apply to all options)

Amplitude Setting (dBm)	Minimum (dBm)	Actual (dBm)	Maximum (dBm)
+13.0	+11.5	_____	+14.5
+8.0	+6.5	_____	+9.5
+3.0	+2.0	_____	+4.0
−2.0	−3.0	_____	−1.0
−7.0	−8.0	_____	−6.0
−12.0	−13.0	_____	−11.0
−17.0	−18.0	_____	−16.0
−22.0	−23.0	_____	−21.0
−27.0	−28.0	_____	−26.0
−32.0	−33.0	_____	−31.0
−37.0	−38.0	_____	−36.0
−42.0	−43.0	_____	−41.0
−47.0	−48.0	_____	−46.0
−52.0	−53.0	_____	−51.0
−57.0	−58.0	_____	−56.0
−63.0	−63.0	_____	−61.0
−67.0	−68.0	_____	−66.0
−72.0	−73.0	_____	−71.0
−77.0	−78.0	_____	−76.0
−82.0	−83.0	_____	−81.0
−87.0	−88.0	_____	−86.0
−92.0	−93.0	_____	−91.0
−97.0	−98.0	_____	−96.0
−102.0	−103.0	_____	−101.0
−107.0	−108.0	_____	−106.0
−112.0	−113.0	_____	−111.0
−117.0	−118.0	_____	−116.0
−122.0	−123.0	_____	−121.0
−127.0	−128.0	_____	−126.0

Performance Test 3

MODULATION TESTS

- **AC Modulation**
  - AM Indicator Accuracy
  - Incidental Phase Modulation
  - AM Distortion
  - FM Indicator Accuracy
  - Incidental AM
  - FM Distortion
- **DC Modulation**
  - DC FM Center Frequency Accuracy
  - DC FM Center Frequency Stability
- **Pulse Modulation**
  - ON OFF Ratio
  - Rise/Fall Time

Specifications

Electrical Characteristics	Performance Limits	Conditions
Amplitude Modulation		
Depth(1,2)	0 to 100%	Output levels ≤7 dBm; frequencies from 400 kHz to 2060 MHz
	0 to 30%	Output levels ≤10 dBm; frequencies from 400 kHz to 2060 MHz
Resolution	1%	
Incidental Phase Modulation	< 0.3 radian peak	30% AM depth and internal rates.
Indicator Accuracy	±(2% +6% of reading)	Depths <90% and internal rates and levels ≤ +7 dBm.
AM Rates		
Internal	400 and 1 kHz, ±2%	
External	20 Hz to 40 kHz	1 dB bandwidth, ac coupled
AM Distortion, 1 kHz internal rate	< 1.5%	0 to 30% AM frequencies <1030
Levels ≥7 dBm	< 3%	31 to 70% AM frequencies <1030
	< 4%	71 to 90% AM frequencies <1030
	< 4%	0 to 30% AM frequencies >1030
	< 4%	31 to 70% AM frequencies >1030
	< 7%	71 to 90% AM frequencies >1030

(1) AM Depth is further limited by the Indicator Accuracy specification.
(2) When Opt. 003 is installed, output level in AM is reduced by 3 dB when f_c is <1030 MHz.

Electrical Characteristics	Performance Limits	Conditions
FM Modulation		
Maximum Peak Deviation (Δfpk):[2]		
20 Hz to 50 kHz	200 kHz	0.1 to 130 MHz (fc)
1 dB Bandwidth	50 kHz	130 to 260 MHz (fc)
	100 kHz	260 to 520 MHz (fc)
	200 kHz	520 to 1040 MHz (fc)
	400 kHz	1040 to 2060 MHz (fc)
	4000 × Rate Hz	0.1 to 130 MHz (fc)
	1000 × Rate Hz	130 to 260 MHz (fc)
	2000 × Rate Hz	260 to 520 MHz (fc)
	4000 × Rate Hz	520 to 1040 MHz (fc)
	8000 × Rate Hz	1040 to 2060 MHz (fc)
Rates (dc mode)	200 kHz	0.1 to 130 MHz (fc)
	50 kHz	130 to 260 MHz (fc)
	100 kHz	260 to 520 MHz (fc)
	200 kHz	520 to 1040 MHz (fc)
	400 kHz	1040 to 2060 MHz (fc)
Center Frequency Accuracy (dc mode)	±500 Hz	0.1 to 130 MHz (fc)
	± 125 Hz	130 to 260 MHz (fc)
	± 250 Hz	260 to 520 MHz (fc)
	± 500 Hz	520 to 1040 MHz (fc)
	± 1000 Hz	1040 to 2060 MHz (fc)
Stability (dc mode)	< 10 Hz/hour	
Resolution	0.1 kHz	Deviations < 100 kHz, fc <1030 MHz
	1 kHz	Deviations ≥ 100 kHz, fc <1030 MHz
	0.2 kHz	Deviations < 100 kHz, fc >1030 MHz
	2 kHz	Deviations ≥ 100 kHz, fc >1030 MHz
Incidental AM		< 20 kHz peak deviation and internal rates:
	< 0.1%	500 kHz to 1030 MHz
	< 0.5%	1030 MHz to 2060 MHz
Indicator Accuracy[2]	±5% of reading	At internal 1kHz rate
FM Distortion (Total Harmonic Distortion)[3]	<0.5%	≥ 6 kHz peak deviations and at internal 1kHz rate
FM Rates:		
Internal	400 and 1 kHz, ±2%	
External	20 Hz to 50 kHz	ac coupled, ±1 dB.
	5 Hz to 100 kHz	±3 dB.
External	dc to 50 kHz	dc coupled, ±1 dB.
	dc to 100 kHz	±3 dB.

(2) FM deviation is further limited by the Indicator Accuracy specification.
(3) FM distortion only applies at deviation at 1/2 maximum, f_c <520 MHz. Typical total FM distortion (harmonic and non-harmonic) is less that 1.5% for all specified deviations and external rates of dc to 100 kHz.

Electrical Characteristics	Performance Limits	Conditions
Pulse Modulation		
ON/OFF Ratio:		
	>70 dB	< 1030 MHz:
	>95 dB	≥ 1030 MHz:
Rise/Fall Time:	< 35 ns	< 1030 MHz
	< 50 ns	≥ 1030 MHz

AC MODULATION

Description

AC modulation specifications are verified by measuring the specified parameters with a measuring receiver. Distortion is verified by measuring the demodulated output from the measuring receiver with a distortion analyzer.

Equipment

Measuring Receiver ..... HP 8902A
Sensor Module ..... HP 11722A
Audio Analyzer and Source ..... HP 8903B
AM/FM Test Source ..... HP 11715A
Cable (UG-21D/U type N connectors) ..... HP 11500B
Cable (UG-88C/U BNC and dual banana plug connectors ..... HP 11001-60001

Procedure

AM Indicator Accuracy

1. Connect the RF OUTPUT of the HP 8657B to the input of the measuring receiver as shown in Figure 4-7.

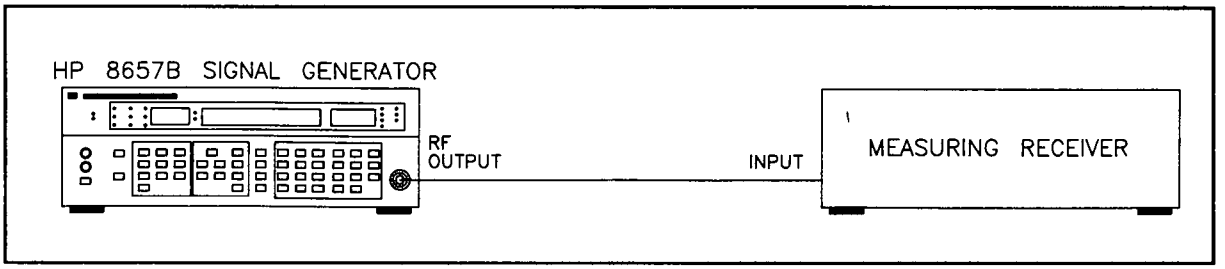

Figure 4–7. Modulation Test Setup

2. Set the measuring receiver as follows:

   Measurement ..... AM
   Detector ..... Peak+ and Peak -
   HP Filter ..... 300 Hz
   LP Filter ..... 15 kHz
   FM De-Emphasis ..... Off
   Automatic Operation ..... Selected

3. Set the HP 8657B as follows:

   Frequency ..... 100 MHz
   Amplitude ..... +4 dBm
   Modulation ..... 1 kHz (Int.) AM 10%

4. Set the AM depth to the values listed in the following table and verify that the measured results are within the limits specified.

MHz	AM Depth	Results		
		Min.	Actual	Max.
100	10%	7.4%	_____	12.6%
	30%	26.2%	_____	33.8%
	70%	63.8%	_____	76.2%
	90%	82.6%	_____	97.4%
240	10%	7.4%	_____	12.6%
	30%	26.2%	_____	33.8%
	70%	63.8%	_____	76.2%
	90%	82.6%	_____	97.4%
400	10%	7.4%	_____	12.6%
	30%	26.2%	_____	33.8%
	70%	63.8%	_____	76.2%
	90%	82.6%	_____	97.4%
1030	10%	7.4%	_____	12.6%
	30%	26.2%	_____	33.8%
	70%	63.8%	_____	76.2%
	90%	82.6%	_____	97.4%
1300	10%	7.4%	_____	12.6%
	30%	26.2%	_____	33.8%
	70%	63.8%	_____	76.2%
	90%	82.6%	_____	97.4%

Incidental Phase Modulation

5. Set the measuring receiver as follows:

Measurement ..... Phase Modulation
HP Filter ..... 300 Hz
LP Filter ..... 15 kHz
Detector ..... Peak+

6. Set the HP 8657B as follows:

Frequency ..... 150 kHz
Frequency Increment ..... 150 kHz
Amplitude ..... +4 dBm
Modulation ..... 1 kHz (Int.) AM 30%

7. Step the HP 8657B through the frequency range of 150 kHz to 1030 MHz use 10 MHz steps above 10 MHz) and record the highest reading. The highest reading should not exceed the limit specified.

HP 8657B Frequency		Result	
Min.	Max.	Actual	Max.
150 kHz	1300 MHz	_____	< 0.3 radian peak

AM Distortion

8. Set the Measuring Receiver as follows:

Measurement ..... AM
HP Filter ..... 300 Hz
LP Filter ..... 15 kHz
Detector ..... Peak+ and Peak-

9. Set the Audio Analyzer as follows:

Measurement ..... Distortion

10. Set the HP 8657B as follows:

Frequency ..... 10 MHz
Amplitude ..... +4 dBm
Modulation ..... 1 kHz (Int.) AM 30%

11. Set the AM depth to the values listed in the following table and verify that the measured results do not exceed the limits specified.

MHz	AM Depth	Results <1030 MHz		Results ≥ 1030 MHz	
		Actual	Max.	Actual	Max.
100	30%	_____	< 1.5%	_____	< 4.0%
	70%	_____	< 3.0%	_____	< 4.0%
	90%	_____	< 4.0%	_____	< 7.0%
240	30%	_____	< 1.5%	_____	< 4.0%
	70%	_____	< 3.0%	_____	< 4.0%
	90%	_____	< 4.0%	_____	< 7.0%
400	30%	_____	< 1.5%	_____	< 4.0%
	70%	_____	< 3.0%	_____	< 4.0%
	90%	_____	< 4.0%	_____	< 7.0%
1030	30%	_____	< 1.5%	_____	< 4.0%
	70%	_____	< 3.0%	_____	< 4.0%
	90%	_____	< 4.0%	_____	< 7.0%
1300	30%	_____	< 1.5%	_____	< 4.0%
	70%	_____	< 3.0%	_____	< 4.0%
	90%	_____	< 4.0%	_____	< 7.0%

FM Indicator Accuracy

12. Set the measuring receiver as follows:

    Measurement ..... FM
    Detector ..... Peak+
    HP Filter ..... 300 Hz
    LP Filter ..... 3 kHz

13. Set the HP 8657B as follows:

    Frequency ..... 100 MHz
    Amplitude ..... +4 dBm
    Modulation ..... 1 kHz (Int) FM 5 kHz

14. Set FM deviation to the values listed in the following table and verify that the measured results are within the limits specified.

FM Deviation for 100 MHz	Results		
	Min.	Actual	Max.
5.0 kHz	4.75 kHz	_____	5.25 kHz
30.0 kHz	28.50 kHz	_____	31.50 kHz
70.0 kHz	66.50 kHz	_____	73.50 kHz
99.0 kHz	94.05 kHz	_____	103.95 kHz

Incidental AM

The incidental AM specification of the HP 8657B is not equivalent to the published specification of the HP 8902A Measuring Receiver. To make a valid incidental AM measurement, the incidental AM of the measuring receiver must be four times better than the specification being tested. In order to verify that the incidental AM of the measuring receiver is adequate to measure the HP 8657B's incidental AM specification, the incidental AM of the measuring receiver must be verified to ensure the validity of the measurement. If the HP 8657B's incidental AM is measured frequently, it is not necessary to verify the incidental AM of the measuring receiver each time; however, it is recommended that it be verified monthly to ensure an accurate measurement.

15. Verify the incidental AM of the measuring receiver as follows:
    a. Connect the FM divide-by-4 output of the AM/FM test source to the input of the measuring receiver and the 50 ohm output of the test oscillator to the audio input of the AM/FM test source, as shown in Figure 4-7.
    b. Set the measuring receiver as follows:

    Measurement ..... Frequency

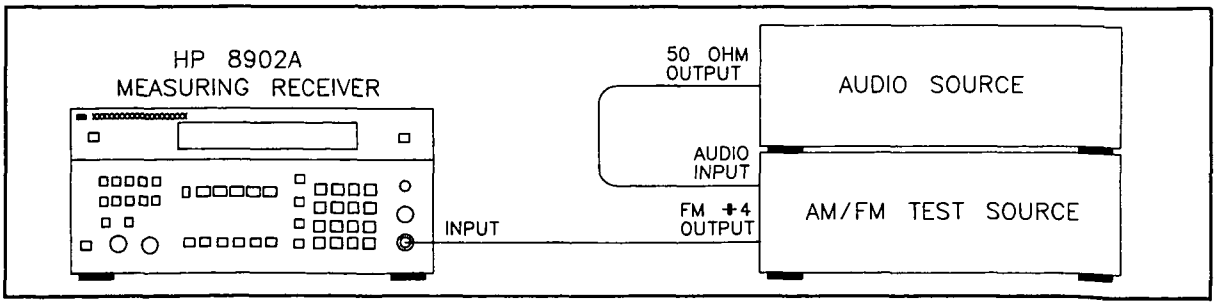

Figure 4–8. Measuring Receiver Incidental AM Verification Test Setup

c. Set the AM/FM test source as follows:

Test Mode ..... FM

d. Tune the carrier frequency on the AM/FM test source for a measuring receiver reading of 100 MHz ±0.1 MHz.

e. Set the test oscillator as follows:

Frequency ..... 1 kHz
Output Attenuator ..... −10 dBm
Amplitude Course ..... Fully ccw

f. Set the measuring receiver as follows:

Measurement ..... FM
Detector ..... Peak+
HP Filter ..... 300 Hz
LP Filter ..... 3 kHz

g. Increase the output of the test oscillator by rotating the Amplitude Coarse control clockwise until the measuring receiver indicates 20.0 kHz ±0.1 kHz peak deviation.

h. Set the measuring receiver as follows:

Measurement ..... AM

i. The modulation must be < 0.02% AM to test the incidental AM of the HP 8657B.

16. Set the measuring receiver as follows:

Measurement ..... AM
Detector ..... Peak+
HP Filter ..... 300 Hz
LP Filter ..... 3 kHz

17. Set the HP 8657B as follows:

Amplitude ..... +4 dBm
Modulation ..... 1 kHz (Int) FM 20 kHz

18. Connect the equipment as shown in Figure 4-7, Modulation Test Setup.

19. Set the HP 8657B frequency to a value within the range specified in the following table and verify that the measured result does not exceed the limit specified.

HP 8657B Frequency		Result	
Min.	Max.	Actual	Max.
10 MHz	1030 MHz	_____	< 0.1%
1030 MHz	1300 MHz	_____	< 0.5%

NOTE

Below 10 MHz, the incidental AM of the HP 8657B is less than that of the measuring receiver.

FM Distortion

20. Set the measuring receiver as follows:

    Measurement ..... FM
    Detector ..... Peak+
    HP Filter ..... 300 Hz
    LP Filter ..... 3 kHz

21. Set the distortion analyzer as follows:

    Function ..... Distortion
    Analyzer Input Select ..... Distortion
    Frequency ..... 1 kHz

22. Set the HP 8657B as follows:

    Frequency ..... 150.0 MHz
    Amplitude ..... +4 dBm
    Modulation ..... 1 kHz (Int) FM

23. Connect the equipment as shown in Figure 4-7, Modulation Test Setup.

24. Verify that the measured Total Harmonic Distortion does not exceed 0.5%.

25. Set the HP 8657B FM deviation to a value within the range specified in the following table and verify that the measured result does not exceed the limit specified.

FM Deviation		Result	
Min.	Max.	Actual	Max.
6 kHz	99 kHz	_____	<0.5%

NOTE

At peak deviations less than 3 kHz, residual FM and other type of FM distortion become a greater portion of the distortion reading. If the distortion falls within tolerance at or above 3 kHz, it may be safely assumed that the HP 8657B meets the test requirements.

DC MODULATION

Description

DC FM specifications are verified by measuring the RF OUTPUT frequency offset with a frequency counter.

Equipment

Frequency Counter ..... HP 5328B OPT 31

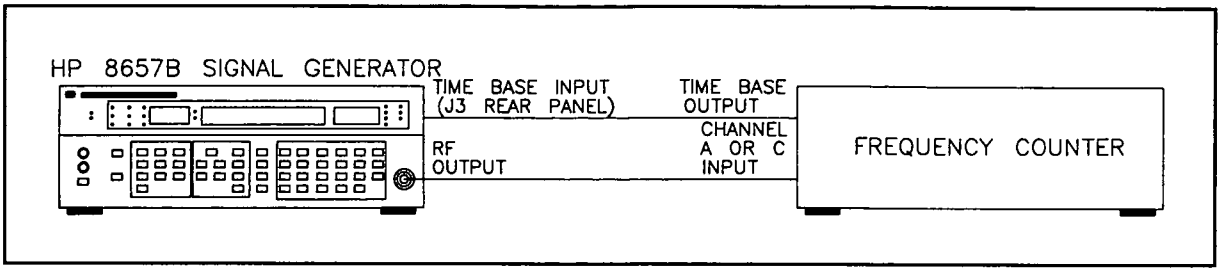

Figure 4–9. DC FM Test Setup

Procedure

DC FM Center Frequency Accuracy and Stability

26. Connect the RF OUTPUT from the HP 8657B to the INPUT of the frequency counter, and connect the HP 8657B TIME BASE INPUT to the Frequency counter TIME BASE OUTPUT as shown in Figure 4-9.

27. Set the frequency counter as follows:

    INPUT ..... CHANNEL A
    TRIGGER ..... CHANNEL A

28. Set the HP 8657B as follows:

    Frequency ..... 100 MHz
    Amplitude ..... 0 dBm
    Modulation ..... DC FM

29. Set the HP 8657B FM deviation to a value for the frequency range specified in the following table. Verify that the measured frequency does not exceed the limits specified.

Frequency (MHz)	DC FM Deviation(kHz)	Accuracy Offset(kHz)	Stability Drift(Hz/Hr)
0.1 to 130	1 to 99	_____ ±500 Hz	_____ ±10
130 to 260	1 to 50	_____ ±125 Hz	_____ ±10
260 to 520	1 to 99	_____ ±250 Hz	_____ ±10
520 to 1030	1 to 99	_____ ±500 Hz	_____ ±10
1030 to 2060	1 to 99	_____ ±1000 Hz	_____ ±10

PULSE MODULATION

Description

The output of the HP 8657B is coupled to an oscilloscope and the Rise/Fall Time of the RF pulses is measured. The ouput of the HP 8657B is then coupled to a spectrum analyzer and the On/Off Level Ratio of the RF pulses is measured.

Equipment

Oscilloscope ..... HP 54100A
Oscilloscope Probe ..... HP 54002A
Pulse Generator ..... HP 8116A
Spectrum Analyzer ..... HP 8562B

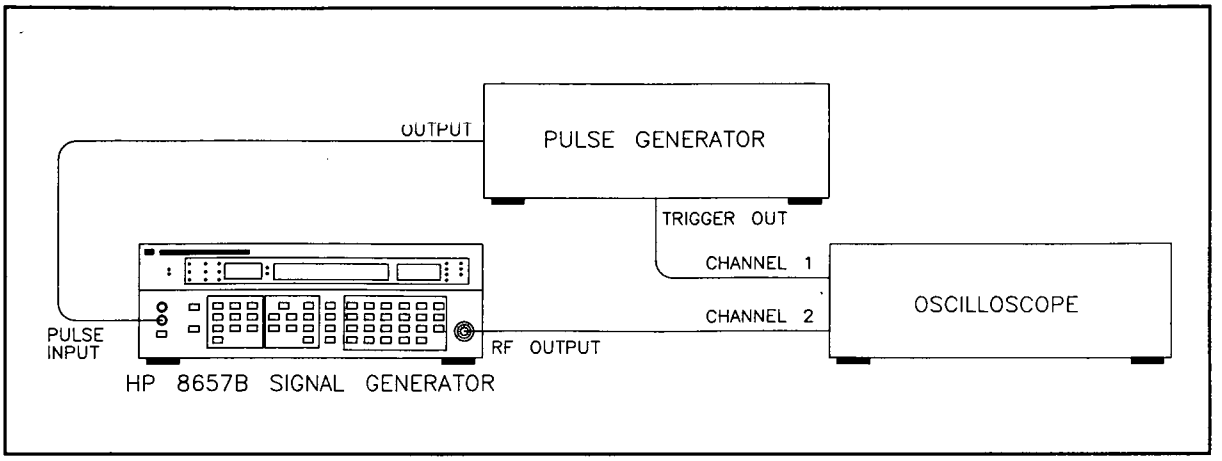

Figure 4–10. Modulation Test Setup

Procedure

30. Connect the equipment as shown in Figure 4-10.

31. Set the HP 8657B as follows:

Frequency	See Table
Amplitude	0 dBm
Modulation	Pulse

32. Set the Pulse Generator as follows:

Mode	Normal
Function	Pulse
Frequency	50 kHz
Amplitude	1 Volt
Amplitude Offset	1 Volt
Pulse Width	10 usec
Output Disable	Off (LED Off)

33. Set the Oscilloscope as follows:

Timebase	
Sec/Div	10 ns
Delay	100 ns
Delay Reference	Center
Trigger	
Mode	Edge
Source	Chan 2
Trigger Level	1.25 V
Slope	Pos
Display	
Mode	Normal
Display Time (Persistence)	2 sec
Split Screen	Off
Graticle	Grid
Channel 1	
Mode	Normal
Display	On
Volts/Div	100 mV
Offset	0 V
Channel 2	
Mode	Normal
Display	Off
Volts/Div	500 mV
Offset	1.25 V
Delta V	
VMarkers	On/Chan1
Marker 1 Position	0 Volt (To Start)
Marker 2 Position	To Maximum Settled Level
After positioning markers to initial position, press 10%-90%	
Delta T	
TMarkers	On
Start Marker (see Figure 11)	At 10% Level Pulse Crossing
Stop Marker (see Figure 11)	At 90% Level Pulse Crossing

Pulse Modulation Rise and Fall Time (Using an Oscilloscope)

NOTE

Figure 4-11 shows the RF Pulse as displayed on the oscilloscope. The Delta V markers are the approximate 10 and 90% Levels of the pulse envelope. The reading Δt is the Rise Time.

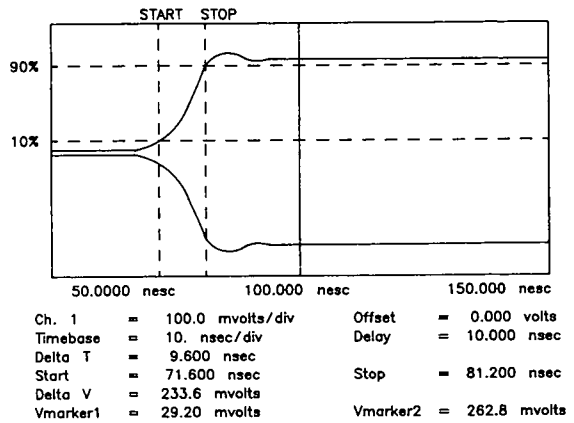

Figure 4–11. *Oscilloscope Display*

NOTE

If the oscilloscope does not have adequate bandwidth at the higher frequencies, proceed with the following steps using a crystal detector.

34. Set the HP 8657B to the frequencies shown in the following Table. For each frequency measure the 10% to 90% Rise Time of the RF Pulse. The Delta V and Delta T Markers will require repositioning after each frequency change. To measure Fall Time will require a Shift Delay of +10 usec minimum on the oscilloscope to view the trailing edge of the pulse (including markers). Refer to Figure 4-11 for an example of the oscilloscope measurement display. The Rise and Fall Time should be within the limits shown in the Table.

Frequency MHz	Results		
	Rise Time Actual	Fall Time Actual	Max
100	_____	_____	<35 ns
300	_____	_____	<35 ns
500	_____	_____	<35 ns
1100	_____	_____	<50 ns

Pulse Modulation Rise and Fall Time (Using a Crystal Detector)

Additional Equipment

Crystal Detector (Negative) ..... HP 423A
Crystal Detector (Positive) ..... HP 423A Opt. 003
Power Splitter ..... HP 11667A
15 MHz Low Pass Filter (2 Required) ..... (See Figure 4-13

35. Connect the equipment as shown in Figure 4-12. Low Pass Filters can be constructed using the schematic in Figure 4-13.

36. Set the HP 8657B to the frequencies shown in the Table. For each frequency measure the 10 % and 90 % Rise and Fall Times of the RF Pulse. The waveform on the oscilloscope now is the peak-detected envelope . The Rise and Fall Time should be within the limits shown in the Table. The oscilloscope setups are the same as in step 33.

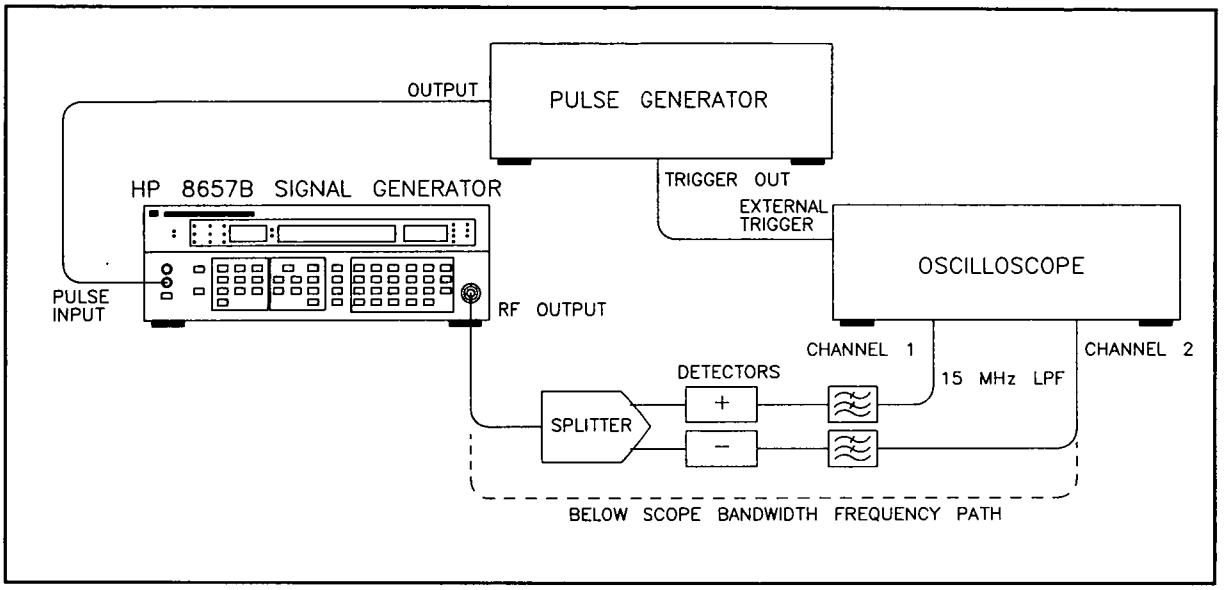

Figure 4–12. Rise/Fall Time Test Setup with Peak Detectors

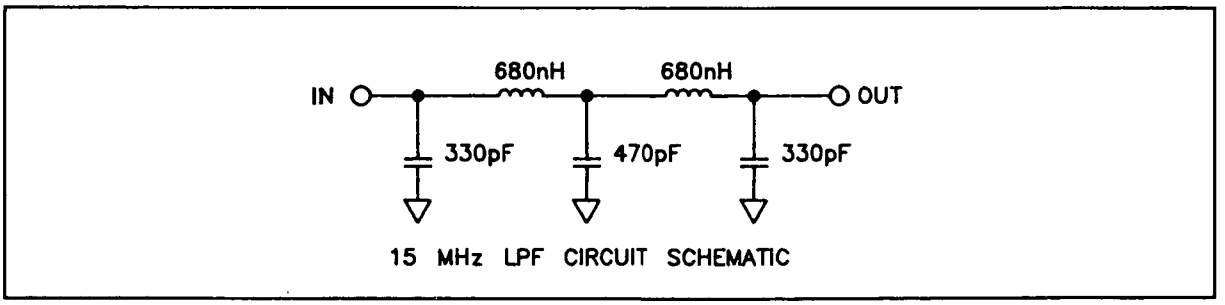

Figure 4–13. Schematic for 15 MHz Low Pass Filters

Pulse Modulation ON/OFF Ratio

37. Set the HP 8657B as follows:

Frequency ..... See Table
Amplitude ..... 0 dBm
Modulation ..... Pulse

38. Connect the equipment as shown in Figure 4-14.

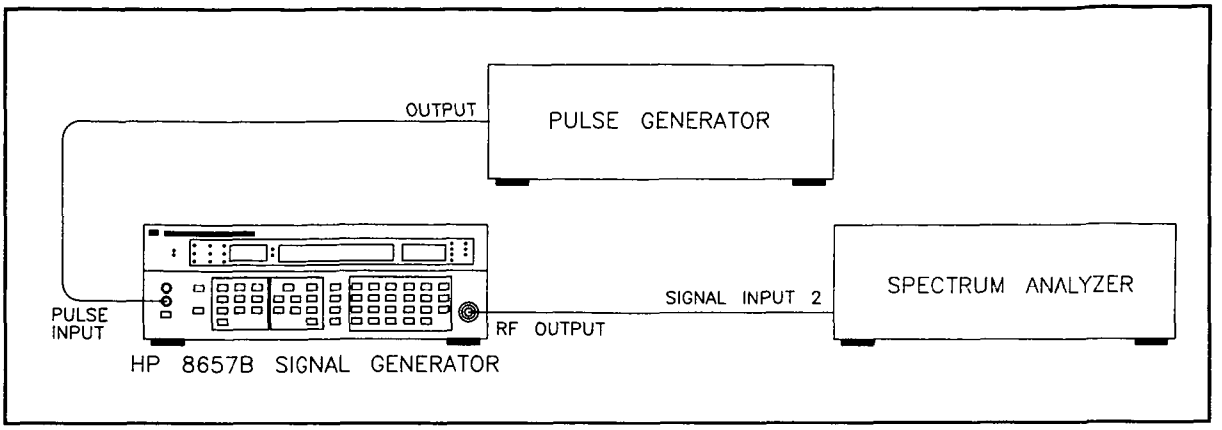

Figure 4–14. Pulse On/Off Ratio Test Setup

39. Set the pulse generator as follows:

Mode ..... Normal
Frequency ..... 100 Hz
Duty Cycle 50%
Amplitude ..... 1 Volt
Offset ..... 1 Volt

40. Set the spectrum analyzer as follows:

Center Frequency ..... See Table
Resolution BW ..... 10 kHz
Video BW ..... 1 MHz
Frequency Span ..... 0 Hz
Reference Level ..... 0 dBm
Reference Level/div ..... 10 dB/div
Trigger ..... Video

41. Set the HP 8657B's frequency and the spectrum analyzer's center frequency to the frequencies shown in the following Table. For each frequency measure the change in amplitude as the HP 8657B is pulsed on and off. The amplitude should drop at least 70 dB for frequencies below 1030 MHz and 95 dB for frequencies above 1030 MHz as the HP 8657B is pulsed on and off.

Frequency MHz	Results	
	On/Off Ratio Actual	Min
100	_____	>70 dB
300	_____	>70 dB
500	_____	>70 dB
1100	_____	>95 dB

Performance Test 4

OUTPUT LEAKAGE TESTS

Specification

Leakage limits are within those specified in MIL STD 461B, and FTZ 1115. Furthermore, less than 1.0 μV is induced in a two-turn, 2.5 cm (1 inch) diameter loop held 2.5 cm (1 inch) away from the front surface and measured into a 50Ω receiver.

Description

Output leakage is verified by holding a loop antenna 2.5 cm (1 inch) from the front surface of the HP 8657B and measuring the resulting signal with a spectrum analyzer.

The loop antenna is suspended in a molding so that when the molding is in contact with a surface, the loop antenna is one inch from the surface.

NOTE

The use of a screen room may be necessary to reduce external radiated interference.

Equipment

One-Inch Loop Antenna ..... HP 08640-60501
26 dB Amplifier ..... HP 8447D
Spectrum Analyzer ..... HP 8562B
50Ω Termination ..... HP 908A

Procedure

1. Connect equipment as shown in Figure 4-15, for the signal path shown as 1-4.

NOTE

To avoid disturbing the antenna's field and causing measurement error, grasp the antenna at the end that has the BNC connector.

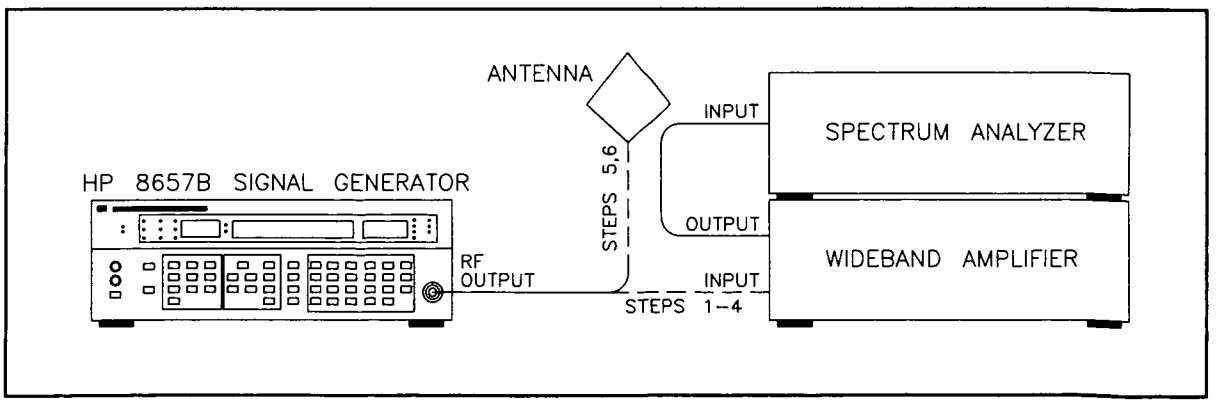

Figure 4–15. Output Leakage Test Setup

2. Set the HP 8657B as follows:

   Frequency ..... 100 MHz
   Amplitude ..... −107 dBm
   Modulation ..... Off

3. Set the spectrum analyzer as follows:

   Center Frequency ..... 100 MHz
   Input Attenuation ..... −40 dB
   Reference Level ..... −20 dBm
   Frequency Span ..... 20 MHz
   Resolution Bandwidth ..... 10 kHz

4. View the signal on the spectrum analyzer and adjust the reference level controls of the spectrum analyzer to set the amplified −107 dBm signal from the HP 8657B to a reference graticule line on the spectrum analyzer display. Set the video filter to further separate the signal from the noise. Disconnect the HP 8657B from the amplifier, and connect a 50 ohm termination to the HP 8657B's RF OUTPUT connector.

5. Connect the one-inch loop antenna to the analyzer through the amplifier as shown in Figure 4-15, for the signal path shown as 5,6. Hold the end of the loop antenna cylinder in contact with the front surfaces of the HP 8657B. All signals and noise should be below the reference graticule line (i.e.,below −107 dBm).

   _____ < −107 dBm (<1.0 μV) at 100 MHz

6. Repeat step 5 for frequencies of 300, 500, 700, 900, 1030, 2060 MHz.

   _____ < −107 dBm (<1.0 μV) at 300 MHz
   _____ < −107 dBm (<1.0 μV) at 500 MHz
   _____ < −107 dBm (<1.0 μV) at 700 MHz
   _____ < −107 dBm (<1.0 μV) at 900 MHz
   _____ < −107 dBm (<1.0 μV) at 1030 MHz
   _____ < −107 dBm (<1.0 μV) at 2030 MHz

Performance Test 5

SWR TEST

- < −6.5 dBm (10 dB Attenuator Pad Selected)
- > −6.5 dBm (Attenuator Pads Not Selected)

Specification

Electrical Characteristics	Performance Limits	Conditions
SWR:		
RF OUTPUT	< 2.0, −9.6 dB Return Loss	≥ −6.5 dBm
	< 1.5, −14 dB Return Loss	< −6.5 dBm
Impedance	50 ohms nominal	
Reverse Power	50 watts	RF power to 2060 MHz into RF OUTPUT, dc voltage cannot exceed 25V.

Description

SWR is verified by comparing the reflected power (frequencies 0.5 to 2060 MHz from an RF signal source) to a reference that represents 100% return loss. The reference level is determined by disconnecting the SWR bridge from the HP 8657B under test, and connecting a short to the SWR bridge (100% reflected power) to the spectrum analyzer. The reference is established on the spectrum analyzer display. The SWR bridge is then connected to the HP 8657B under test, and return loss for the frequency is displayed on the spectrum analyzer. The output frequency of HP 8657B under test must be set 100 MHz from the frequency of the RF signal source.

Equipment

RF Signal Source ..... HP 8657B
Spectrum Analyzer ..... HP 8562B
SWR Bridge ..... Wiltron 60N50
Cables (UG-21D/U type N connectors) ..... HP 11500B (2 Required)

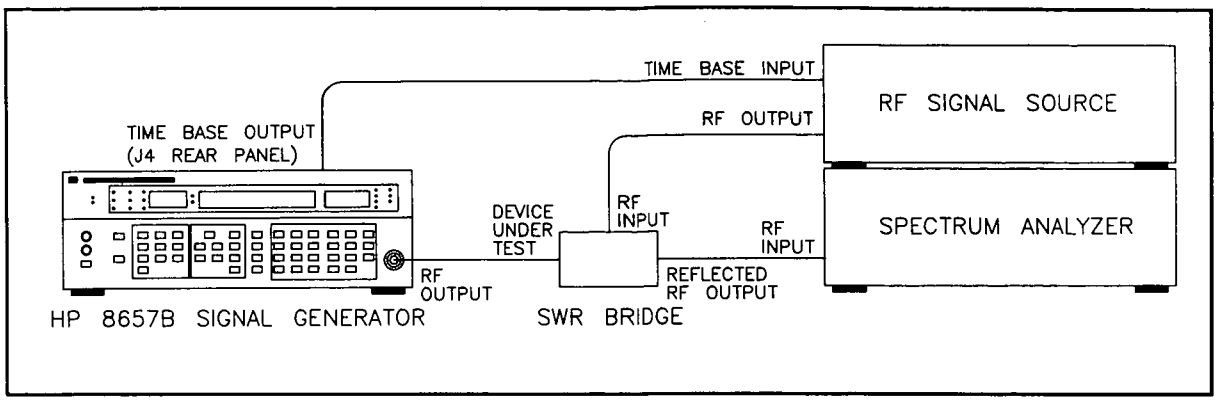

Figure 4–16. SWR Performance Test Setup (Out of Band)

Procedure

≤ −6.5 dBm (10 dB Attenuator Pad Selected)

1. Set the HP 8657B as follows:

   Frequency ..... 0.1 MHz
   Modulation ..... Off
   Amplitude ..... −10 dBm

2. Set the spectrum analyzer as follows:

   Frequency Span ..... 100 MHz
   Resolution Bandwidth ..... 300 kHz
   Reference Level ..... 0 dBm
   Center Frequency ..... 100 MHz

3. Set the RF signal source as follows:

   Output Level ..... +10 dBm
   Frequency ..... 100 MHz

4. Connect the equipment as shown in Figure 4-16.

5. With the SWR bridge disconnected from the HP 8657B under test, and a short connected to the SWR bridge, set the reference level on the spectrum analyzer for a 100% reflected signal.

6. Connect the SWR bridge to the HP 8657B's RF OUTPUT connector. The difference, in dB, of the level on the display and the reference is the return loss of the HP 8657B's RF OUTPUT connector. The return loss must be >14 dB.

   _____ 14 dB

7. Repeat steps 3 through 6 with the RF signal source set to any frequency between 5 MHz and 2060 MHz and 100 MHz from the HP 8657B's frequency.

   _____ 14 dB

SWR Test > −6.5 dBm (Attenuator Pads Not Selected)

SWR, without any attenuation, is verified by the following procedure. Set the amplitude of the HP 8657B under test and turn off the RF signal source. Then the amplitude of the reflected signal from the RF source is set to an equal level with the Device Under Test port shorted. The maximum and minimum voltages in dB are read from the spectrum analyzer to compute the SWR using the equation listed below.

8. Set the HP 8657B (HP 8657B) as follows:

   Frequency ..... 100 MHz
   Modulation ..... Off
   Amplitude ..... −2 dBm

9. Set the spectrum analyzer as follows:

   Frequency Span ..... 0 Hz
   Resolution Bandwidth ..... 3 MHz
   Reference Level ..... 0 dBm
   Center Frequency ..... 100 MHz
   Scale ..... LOG 2dB/Div

10. Set the RF signal source as follows:

    Amplitude ..... −127 dBm
    Modulation ..... Off
    Frequency ..... 100 MHz
    RF ..... Off

11. Connect the equipment as shown in Figure 4-16.

12. With the SWR bridge connected to the HP 8657B under test, and the amplitude of the RF signal source turned off, set a reference on the spectrum analyzer. Tune the frequency of the spectrum analyzer for maximum level on the display.

13. Disconnect the SWR bridge from the HP 8657B under test and connect a short to the Device Under Test port.

14. Set the amplitude of the RF signal source to +13 dBm.

15. Set the amplitude of the RF signal source to the same level on the spectrum analyzer as set in step 12.

16. Remove the short from the SWR bridge, and connect the SWR bridge to the HP 8657B under test.

17. Press and release the Blue SHIFT key. Press and hold the Phase Decrement DOWN key (frequency decrement DOWN key). The level on the spectrum analyzer changes as the phase changes.

NOTE

Each time the Phase Decrement key is released, the SHIFT key must be pressed to reselect the Phase Decrement function.

18. Read the maximum and minimum power levels from the spectrum analyzer and substitute their value in the following equation and solve for the SWR of the HP 8657B.

    _____ <2.0

19. Repeat steps 8 through 18 for each frequency between 5 and 2060 MHz SWR is to be checked.

$$SWR = \frac{1+\rho}{1-\rho} = \frac{E_{max}}{E_{min}}$$

$$E_{max} = A + \rho A$$

$$E_{min} = A - \rho A$$

$$SWR = \frac{E_{max}/A}{E_{min}/A} = \frac{E_{max}}{E_{min}}$$

$$20\ log\ E_{max} = E_{max} dB$$

$$20\ log\ E_{min} = E_{min} dB$$

$$20\ log\ SWR = 20\ log \frac{(E_{max})}{(E_{min})}$$

$$20\ log\ SWR = 20\ log E_{max} - 20\ log E_{min}$$

$$20\ log\ SWR = E_{max}\ dB - E_{min}\ dB$$

$$SWR = 10^{\frac{E_{max}\ dB - E_{min}\ dB}{20}}$$

Performance Test Record

SPECTRAL PURITY TESTS

Spurious Signals

Spurious Signals	Results	
	Actual	Max.
Harmonics	_____	< −30 dBc, 0.1 to 1030 MHz
	_____	< −25 dBc, 1030 to 2060 MHz
Non-Harmonics	_____	< −60 dBc, 0.1 to 1030 MHz
(≥ 2 MHz from carrier)	_____	< −54 dBc, 1030 to 2060 MHz
5 kHz to 2 MHz from carrier	_____	< −63 dBc, 0.1 tp 130 MHz
	_____	< −75 dBc, 130 to 260 MHz
	_____	< −66 dBc, 260 to 520 MHz
	_____	< −63 dBc, 520 to 1030 MHz
	_____	< −57 dBc, 1030 to 2060 MHz
Sub-Harmonics	_____	None, 0.1 to 1030 MHz
	_____	< −40 dBc, 1030 to 1800 MHz
	_____	< −35 dBc, 1800 to 2060 MHz

Residual AM

The digital multimeter should indicate <4.00 mVrms.

Actual	Maximum
_____	_____

Residual FM

HP 8657B Frequency (MHz)	Modulation Analyzer Filter		Results (Hz rms)	
	High Pass (Hz)	Low Pass (kHz)	Actual	Max.
0.15 to 129.99999	300	3	_____	< 4
0.15 to 129.99999	50	15	_____	< 6

Optional Residual FM Test

Optional Residual FM Test Specifications

Test HP 8657B Frequency (MHz)	LO Signal Generator Frequency (MHz)	Modulation Analyzer Filter		Results (Hz rms)	
		High Pass (Hz)	Low Pass (kHz)	Actual	Max.
245	246.5	300	3	_____	< 1
410	411.5	300	3	_____	< 2
775	776.5	300	3	_____	< 3
1300	1301.5	300	3	_____	< 6
245	246.5	50	15	_____	< 1.5
410	411.5	50	15	_____	< 3
775	776.5	50	15	_____	< 4
1300	1301.5	50	15	_____	< 8

SSB Phase Noise

Offset from Carrier	SSB Phase Noise		Carrier Frequency (MHz)
	Min.	Actual	
20 kHz	–124 dBc/Hz	_____	0.1 to 129
	–136 dBc/Hz	_____	130 to 260
	–130 dBc/Hz	_____	260 to 520
	–124 dBc/Hz	_____	520 to 1040
	–118 dBc/Hz	_____	1040 to 1600

OUTPUT LEVEL ACCURACY AND FLATNESS TESTS

Step the HP 8657B and measuring receiver through the frequency range of 100 kHz to 2060 MHz. Record the highest and lowest power levels and their frequencies and calculate the maximum variation.

_____ Highest Reading _____ Frequency

_____ Lowest Reading _____ Frequency

The amplitude variation should not exceed 1.0 dB. Record the maximum variation (highest reading – lowest reading).

_____ <1.0 dB

Step the HP 8657B and measuring receiver through the frequency range of 3 MHz to 1300 MHz. Record the highest and lowest reading to be used in the Absolute Level Accuracy test.

_____ Highest Reading _____ Test Frequency 1

_____ Lowest Reading _____ Test Frequency 2

Absolute Level Accuracy

RF Output Test Frequency 1 _____
(+13 dBm will not apply to all options)

Amplitude Setting (dBm)	Minimum (dBm)	Actual (dBm)	Maximum (dBm)
+13.0	+11.5	_____	+14.5
+8.0	+6.5	_____	+9.5
+3.0	+2.0	_____	+4.0
−2.0	−3.0	_____	−1.0
−7.0	−8.0	_____	−6.0
−12.0	−13.0	_____	−11.0
−17.0	−18.0	_____	−16.0
−22.0	−23.0	_____	−21.0
−27.0	−28.0	_____	−26.0
−32.0	−33.0	_____	−31.0
−37.0	−38.0	_____	−36.0
−42.0	−43.0	_____	−41.0
−47.0	−48.0	_____	−46.0
−52.0	−53.0	_____	−51.0
−57.0	−58.0	_____	−56.0
−63.0	−63.0	_____	−61.0
−67.0	−68.0	_____	−66.0
−72.0	−73.0	_____	−71.0
−77.0	−78.0	_____	−76.0
−82.0	−83.0	_____	−81.0
−87.0	−88.0	_____	−86.0
−92.0	−93.0	_____	−91.0
−97.0	−98.0	_____	−96.0
−102.0	−103.0	_____	−101.0
−107.0	−108.0	_____	−106.0
−112.0	−113.0	_____	−111.0
−117.0	−118.0	_____	−116.0
−122.0	−123.0	_____	−121.0
−127.0	−128.0	_____	−126.0

RF Output Test Frequency 2 _____
(+13 dBm will not apply to all options)

Amplitude Setting (dBm)	Minimum (dBm)	Actual (dBm)	Maximum (dBm)
+13.0	+11.5	_____	+14.5
+8.0	+6.5	_____	+9.5
+3.0	+2.0	_____	+4.0
−2.0	−3.0	_____	−1.0
−7.0	−8.0	_____	−6.0
−12.0	−13.0	_____	−11.0
−17.0	−18.0	_____	−16.0
−22.0	−23.0	_____	−21.0
−27.0	−28.0	_____	−26.0
−32.0	−33.0	_____	−31.0
−37.0	−38.0	_____	−36.0
−42.0	−43.0	_____	−41.0
−47.0	−48.0	_____	−46.0
−52.0	−53.0	_____	−51.0
−57.0	−58.0	_____	−56.0
−63.0	−63.0	_____	−61.0
−67.0	−68.0	_____	−66.0
−72.0	−73.0	_____	−71.0
−77.0	−78.0	_____	−76.0
−82.0	−83.0	_____	−81.0
−87.0	−88.0	_____	−86.0
−92.0	−93.0	_____	−91.0
−97.0	−98.0	_____	−96.0
−102.0	−103.0	_____	−101.0
−107.0	−108.0	_____	−106.0
−112.0	−113.0	_____	−111.0
−117.0	−118.0	_____	−116.0
−122.0	−123.0	_____	−121.0
−127.0	−128.0	_____	−126.0

AC MODULATION

AM Indicator Accuracy

MHz	AM Depth	Results		
		Min.	Actual	Max.
100	10%	7.4%	_____	12.6%
	30%	26.2%	_____	33.8%
	70%	63.8%	_____	76.2%
	90%	82.6%	_____	97.4%
240	10%	7.4%	_____	12.6%
	30%	26.2%	_____	33.8%
	70%	63.8%	_____	76.2%
	90%	82.6%	_____	97.4%
400	10%	7.4%	_____	12.6%
	30%	26.2%	_____	33.8%
	70%	63.8%	_____	76.2%
	90%	82.6%	_____	97.4%
1030	10%	7.4%	_____	12.6%
	30%	26.2%	_____	33.8%
	70%	63.8%	_____	76.2%
	90%	82.6%	_____	97.4%
1300	10%	7.4%	_____	12.6%
	30%	26.2%	_____	33.8%
	70%	63.8%	_____	76.2%
	90%	82.6%	_____	97.4%

Incidental Phase Modulation

HP 8657B Frequency		Result	
Min.	Max.	Actual	Max.
150 kHz	1300 MHz	_____	< 0.3 radian peak

AM Distortion

MHz	AM Depth	Results <1030 MHz		Results ≥1030 MHz	
		Actual	Max.	Actual	Max.
100	30%	_____	< 1.5%	_____	< 4.0%
	70%	_____	< 3.0%	_____	< 4.0%
	90%	_____	< 4.0%	_____	< 7.0%
240	30%	_____	< 1.5%	_____	< 4.0%
	70%	_____	< 3.0%	_____	< 4.0%
	90%	_____	< 4.0%	_____	< 7.0%
400	30%	_____	< 1.5%	_____	< 4.0%
	70%	_____	< 3.0%	_____	< 4.0%
	90%	_____	< 4.0%	_____	< 7.0%
1030	30%	_____	< 1.5%	_____	< 4.0%
	70%	_____	< 3.0%	_____	< 4.0%
	90%	_____	< 4.0%	_____	< 7.0%
1300	30%	_____	< 1.5%	_____	< 4.0%
	70%	_____	< 3.0%	_____	< 4.0%
	90%	_____	< 4.0%	_____	< 7.0%

FM Indicator Accuracy

FM Deviation for 100 MHz	Results		
	Min.	Actual	Max.
5.0 kHz	4.75 kHz	_____	5.25 kHz
30.0 kHz	28.50 kHz	_____	31.50 kHz
70.0 kHz	66.50 kHz	_____	73.50 kHz
99.0 kHz	94.05 kHz	_____	103.95 kHz

Incidental AM

HP 8657B Frequency		Result	
Min.	Max.	Actual	Max.
10 MHz	1030 MHz	_____	< 0.1%
1030 MHz	1300 MHz	_____	< 0.5%

FM Distortion

FM Deviation		Result	
Min.	Max.	Actual	Max.
6 kHz	99 kHz	_____	<0.5%

DC MODULATION

DC FM Center Frequency Accuracy And Stability

Frequency (MHz)	DC FM Deviation(kHz)	Accuracy Offset(kHz)	Stability Drift(Hz/Hr)
0.1 to 130	1 to 99	_____ ±500 Hz	_____ ±10
130 to 260	1 to 50	_____ ±125 Hz	_____ ±10
260 to 520	1 to 99	_____ ±250 Hz	_____ ±10
520 to 1030	1 to 99	_____ ±500 Hz	_____ ±10
1030 to 2060	1 to 99	_____ ±1000 Hz	_____ ±10

Pulse Modulation Rise and Fall Time

Frequency MHz	Results		
	Rise Time Actual	Fall Time Actual	Max
100	_____	_____	<35 ns
300	_____	_____	<35 ns
500	_____	_____	<35 ns
1100	_____	_____	<40 ns

Pulse Modulation ON/OFF Ratio

Frequency MHz	Results	
	On/Off Ratio Actual	Min
100	_____	>70 dB
300	_____	>70 dB
500	_____	>70 dB
1100	_____	>95 dB

OUTPUT LEAKAGE TESTS

Test for frequency of 100 MHz.

_____ < −107 dBm (<1.0 μV) at 100 MHz

Test for frequencies of 300, 500, 700, 900, 1030, 2060 MHz.

_____ < −107 dBm (<1.0 μV) at 300 MHz
_____ < −107 dBm (<1.0 μV) at 500 MHz
_____ < −107 dBm (<1.0 μV) at 700 MHz
_____ < −107 dBm (<1.0 μV) at 900 MHz
_____ < −107 dBm (<1.0 μV) at 1030 MHz
_____ < −107 dBm (<1.0 μV) at 2030 MHz

SWR TEST

≤ -6.5 dBm (10 dB Attenuator Pad Selected)

Test for frequency of .1 MHz (100 MHz from carrier).

_____ > 14 dBm

Test for frequencies of between 5 MHz and 2060 MHz (100 MHz from carrier).

_____ > 14 dBm

> -6.5 dBm (Attenuator Pads Not Selected)

Test for frequency of 100 MHz .

_____ < 2 dBm

Section 5
ADJUSTMENTS

5-1. INTRODUCTION

This section contains adjustments and checks that assure peak performance of the HP 8657B. The HP 8657B should be readjusted after repair or failure to pass a performance test. Allow a 30-minute warm-up prior to performing the adjustments. Removal of the HP 8657B top and bottom covers is required for most adjustments. Included in this section are test setups and diagrams that show the location of each assembly. Adjustment location diagrams and removal and disassembly instructions are provided at the end of this section. To determine which performance tests and adjustments to perform after a repair, refer to Table 5-2, Post-Repair Adjustments.

5-2. SAFETY CONSIDERATIONS

Refer to the Safety Considerations page found at the beginning of this manual for a summary of the safety information.

5-3. EQUIPMENT REQUIRED

All adjustment procedures contain a list of required test equipment. The test equipment is also identified by callouts in the test setup diagrams, where included. If substitutions must be made for the specified test equipment, refer to the Recommended Test Equipment table in Section 1 of this manual for the minimum specifications. It is important that the test equipment meet the critical specifications listed in the table if the HP 8657B is to meet it's performance requirements.

5-4. FACTORY-SELECTED COMPONENTS

Factory-selected components are identified on the schematics and parts lists by asterisk (*) which follows the reference designator. The nominal value or range of the components is shown. Manual Update addition and replacement pages provide updated information pertaining to selected components. Table 5-1 lists the reference designator, the basis used for selecting a particular value, the nominal value range, and the service sheet where the component part is shown.

5-5. POST-REPAIR ADJUSTMENTS

Table 5-2 lists the adjustments related to repairs or replacement of any of the assemblies.

5-6. RELATED ADJUSTMENTS

The procedures in this section can be done in any order; however, it is suggested that the power supply voltage, reference voltage, and audio oscillator adjustments be performed first. Changes in these adjustments can affect other adjustments, especially level and modulation accuracies.

WARNING

Maintenance described herein is performed with power supplied to the instrument, and protective covers removed. Such maintenance should be performed only by service-trained personnel who are aware of the hazards involved (for example, fire and electrical shock). Where maintenance can be performed without power applied, the power should be removed.

Table 5–1. Factory Selected Components

Reference Designator	Service Sheet	Range of Values	Basis of Selection
A3C23	16	33 pF to 47 pF	Select capacitor so that the output level of the 50 MHz Reference Oscillator can be adjusted to greater than +17 dBm.
A3L6	16	680 nH or 470 nH	Select inductor so that the 50 MHz crystal can be tuned to 50 MHz ±1250 Hz using an external reference.
A3R303	11	3.16k to 4.64k	Nominal value 3.16k. Select alternate values (3.48k or 4.64k) to insure correct operation of Fractional-N IC (A3U17).
A4R6, 7, 10	1	See table under "Basis of Selection"	Attenuator pad selected for −8 dBm input to mixer A4U1. Measure power level at RF Test Point A4TP3 as described in Adjustment 9. Select pad values for −8 dBm to mixer. Level must be checked whenever the A3A1, A4, A8, or FL1 assemblies are replaced.

Attenuation (dB)	R6, R10 (ohms)	HP Part No. (Check Digit)	R7 (ohms)	HP Part No. (Check Digit)
2	422	0698-7227 (6)	10	0698-7189 (9)
3	287	0698-7223 (2)	17.8	0698-7194 (6)
4	215	0698-7220 (9)	23.7	0698-7197 (9)
5	178	0698-7218 (5)	31.6	0698-7200 (5)
6	147	0698-7216 (3)	38.3	0698-7202 (7)
7	133	0698-7215 (2)	46.4	0698-7204 (9)
8	121	0698-7214 (1)	51.1	0698-7205 (0)
9	110	0698-7213 (0)	61.9	0698-7207 (2)
10	100	0698-7212 (9)	75.0	0698-7209 (4)

A4C155	1	10 pF to 33 pF	Decrease the value of C155 if the 520-1040 MHz oscillator fails to oscillate at 520 MHz only. Increase C15's value if spurs are present at half the fundamental frequency from 520-1040 MHz.
A6C232	4	0 or 1.8 pF	Removed to eliminate spurs at 1200 to 1400 MHz when the RF OUTPUT is 600 MHz to 700 MHz.
A8C5	3	47 pF to 82 pF	Select A8C5 to maximize DC voltage measured at J2 pin 4.
A8C19	3	20 pF to 39 pF	Select A8C19 to maximize DC voltage measured at J2 pin 6.
A8C40	3	0 or 1000 pF	Selected to eliminate a spurious signal at 700 MHz.

Table 5–2. Post-Repair Adjustments

Assembly Repaired or Replaced	Reference Service Sheet No.	Related Adjustments
A3	10 - 16	5,6
A3	10 - 16	8,9,10,11,20
A3	9	7,14
A4	1 - 2	14,15,16
A6	4 - 5	17,18
A8	3	13,14
A9	8	2
A10	8	2
A11	6 - 7	2,3,4,12,17,18,21,22
A14	24	1,2
A16	17	23
FL1	3	14

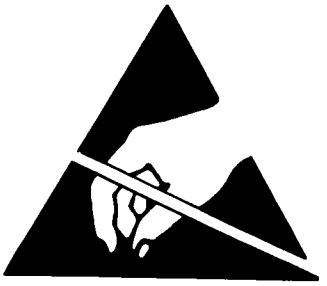

ATTENTION
Static Sensitive Devices

When handling equipment containing static sensitive devices, adaquate precautions must be taken to prevent device damage or destruction. Only those who are thoroughly familiar with industry accepted techniques for handling static sensitive devices should attempt to service circuitry with these devices.

Adjustment 1

POWER SUPPLY VOLTAGE ADJUSTMENTS

- **Service Sheets 10 and 24.**

Description

The +5.2, −5.2, +15.0, −15.0, and +38.0 Vdc power supplies are adjusted using a digital multimeter. The +5.2 Vdc power supply is adjusted for +5.2 Vdc ±0.02 Vdc at A13J2 pin 1. The −5.2 Vdc power supply is adjusted for −5.2 Vdc ±0.02 Vdc at A13J2 pin 2. The +15.0 Vdc power supply is adjusted for +15.0 Vdc ±0.1 Vdc at A13J2 pin3. The −15.0 Vdc power supply is adjusted for −15.0 Vdc ±0.1 Vdc at A3J2 pin4. The +38 Vdc power supply is adjusted for +38 Vdc ± 0.3 Vdc at A13J2 pin 5.

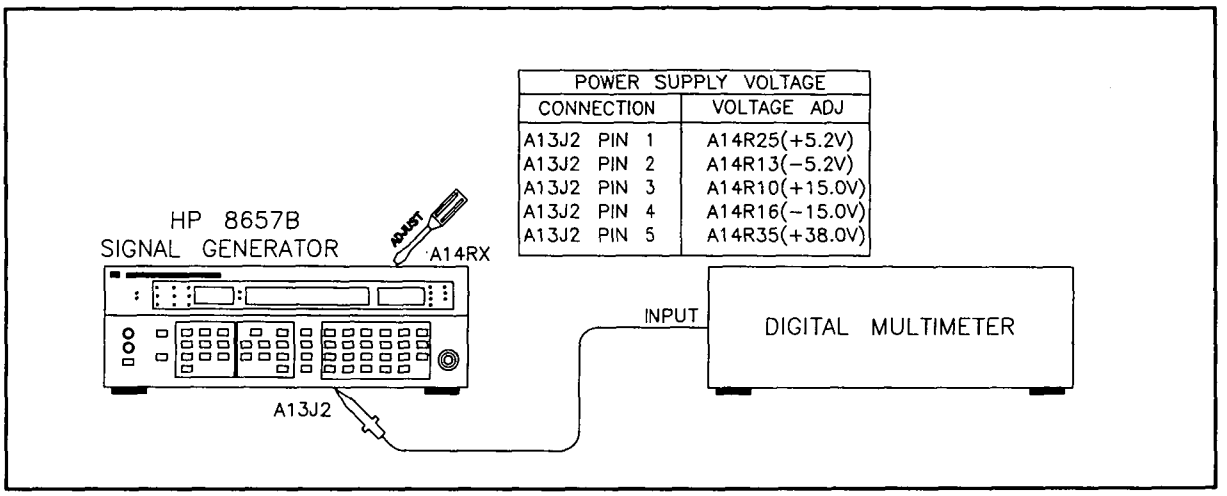

Figure 5–1. Power Supplies Adjustment Setup

Equipment

Digital Multimeter ..... HP 3466A

Procedure

1. Set the digital multimeter as follows:

   Function ..... Vdc
   Range 20V

2. Set the HP 8657B to Frequency 140 MHz, Amplitude −10 dBm and AM 50%.
3. Connect the digital multimeter to A13J2 A13J2 pin 1. Adjust A14R25 (+5.2V ADJ) for a reading of +5.2 Vdc ±0.02 Vdc on the digital multimeter.
4. Connect the digital multimeter to A13J2 pin 2. Adjust A14R13 (−5.2V ADJ) for a reading of −5.2 Vdc ±0.02 Vdc on the digital multimeter.
5. Connect the digital multimeter to A13J2 pin3. Adjust A14R10 (+15.0V ADJ) for a reading of +15.0 Vdc ±0.1 Vdc on the digital multimeter.
6. Connect the digital multimeter to A13J2 pin4. Adjust A14R16 (−15.0V ADJ) for a reading of −15.0 Vdc ±0.1 Vdc on the digital multimeter.

7. Set digital multimeter Range to 200 V. Connect the digital multimeter to A13J2 pin 5. Adjust A14R35 (+38.0V ADJ) for a reading of +38.0 Vdc ±0.3 Vdc on the digital multimeter.

Adjustment 2

REFERENCE VOLTAGE ADJUSTMENT

- **Service Sheet 6**

Description

The +2 Vdc reference is adjusted for +2.000 Vdc ±0.004 Vdc at A11TP1 using a digital multimeter.

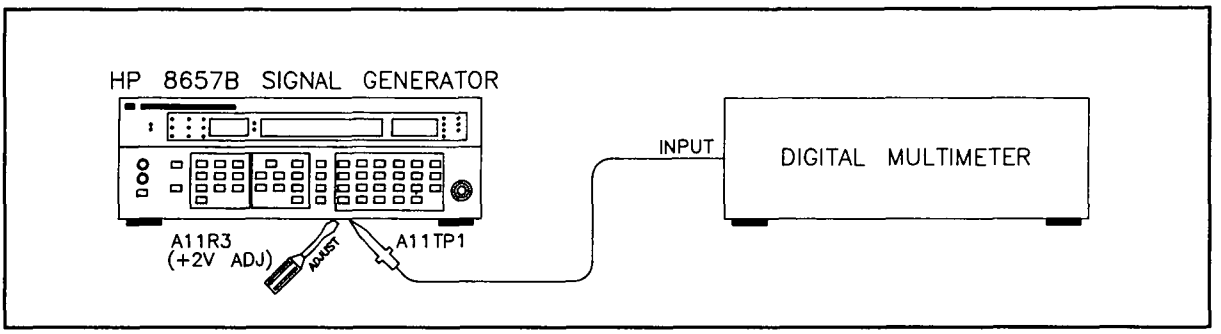

Figure 5–2. +2 Vdc Reference Adjustment Setup

Equipment

Digital Multimeter ..... HP 3466A

Procedure

1. Set the digital multimeter as follows:

   Function ..... Vdc
   Range 20V

2. Set the HP 8657B as follows:

   Frequency ..... 140 MHz
   Amplitude ..... −10 dBm
   Modulation ..... AM 50%

3. Connect the digital multimeter to A11TP1 and adjust A11R3 (+2V ADJ) for a reading of 2.000 Vdc ±0.004 Vdc on the digital multimeter.

Adjustment 3

AUDIO OSCILLATOR LEVEL ADJUSTMENT

- **Service Sheet 7**

Description

The internal 1 kHz modulation source is adjusted to 0.707 Vrms ±0.007 Vrms at A11TP2 (OSC). Then, the internal 400 Hz modulation source is checked to ensure that it is within the same limits.

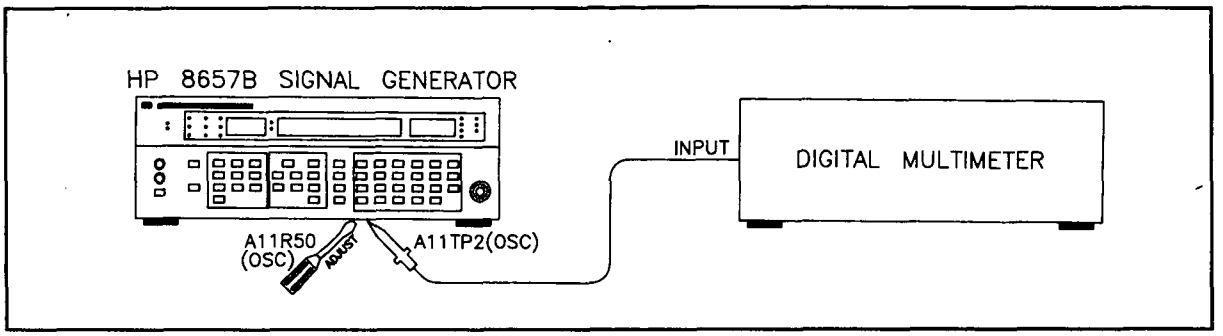

Figure 5–3. Audio Oscillator Level Adjustment Setup

Equipment

Digital Multimeter ..... HP 3466A

Procedure

1. Set the digital multimeter as follows:

   Function ..... Vac
   Range 2V

2. Set the HP 8657B as follows:

   Frequency ..... Any
   Amplitude ..... Any
   Modulation ..... AM
   Source ..... 1 kHz

3. Connect the digital multimeter to A11TP2 (OSC).
4. Adjust A11R50 (OSC) for a 0.707 Vrms ±0.007 Vrms reading on the digital multimeter.
5. Select the internal 400 Hz modulation source. Check that the 400 Hz oscillator level is within 0.707 Vrms ±0.007 Vrms. If it is not, repeat step 4 until both readings are within the specified limits.

Adjustment 4

AM OFFSET ADJUSTMENT

- Service Sheet 7

Description

The dc offset of the AM Offset Buffer is adjusted for 0.000 Vdc ±0.001 Vdc at A11TP6 (AM) with the reference inputs to the Level DAC and AM% DAC grounded, and the digital input to each programmatically set to zero.

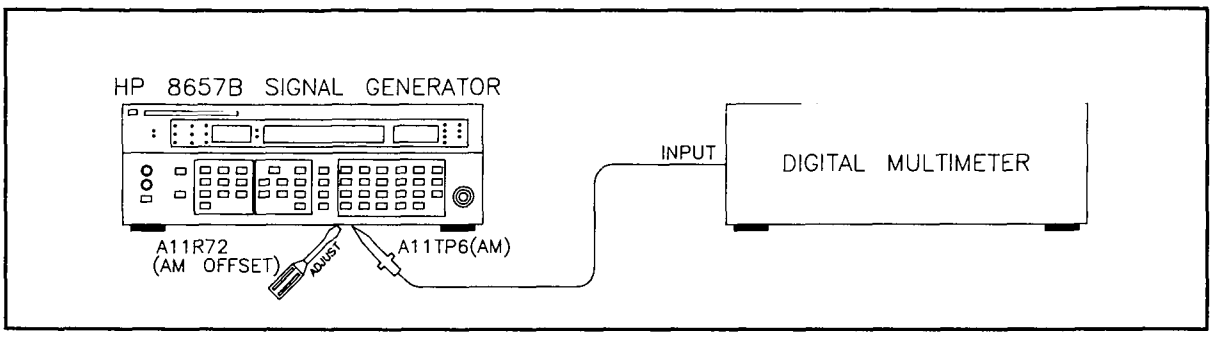

Figure 5–4. AM Offset Adjustment Setup

Equipment

Digital Multimeter ..... HP 3466A

Procedure

1. Set the digital multimeter as follows:

   Function ..... Vdc
   Range ..... 200 mV

2. Set the HP 8657B modulation off.
3. Short A11TP4 to A11TP5.
4. Select Keyboard Invoked Test number 2 by pressing the SHIFT key, and then the INCR SET key. Next, press the AMPTD up-arrow key once to show the number "2" in the MODULATION Display. Press the INCR SET key once to zero the AM and FM modulation DACs. In the AMPLITUDE DISPLAY "00" should be seen to indicate that test number 2 is complete.
5. Connect the digital multimeter to A11TP6 (AM).
6. Adjust A11R72 (AM OFFSET) for 0.000 Vdc ±0.001 Vdc.
7. Remove the two shorts installed in step 3.
8. Press the AMPTD up arrow key five times until "7" is shown in the MODULATION Display.
9. Press the INCR SET key once to exit from the Keyboard Invoked Tests.

Adjustment 5

50 MHZ REFERENCE OSCILLATOR FREQUENCY ADJUSTMENT

- Service Sheet 16

Description

The internal 50 MHz Reference Oscillator frequency is adjusted to 50.0000 MHz ±100 Hz by adjusting the TIME BASE OUTPUT for 10.000 000 MHz ±20 Hz (50 MHz reference divided-by-10) using a frequency counter.

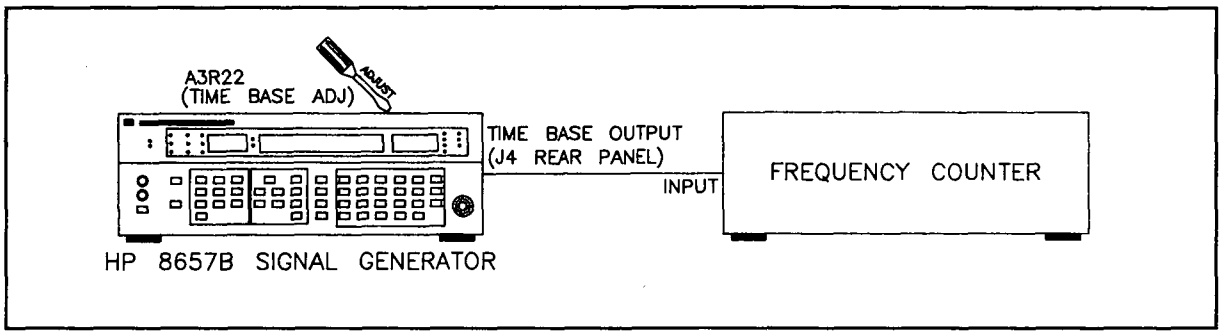

Figure 5–5. 50 MHz Reference Oscillator Frequency Adjustment Setup

Equipment

Frequency Counter ..... HP 5328B
Cable BNC(m) ..... HP 10503A

NOTE

If the HP 8657B has Option 001 installed, disconnect the coaxial looping cable from the rear-panel TIME BASE INPUT connector.

Procedure

1. Connect the frequency counter to J4 using the BNC cable.
2. Adjust A3R22 (TIME BASE ADJ) for a frequency counter reading of 10.000 000 MHz ±20 Hz.

Adjustment 6

50 MHZ REFERENCE OSCILLATOR LEVEL ADJUSTMENT

- **Service Sheet 16**

Description

The output power level of the 50 MHz Reference Oscillator is adjusted for a maximum level between +16 and +19 dBm at A3J8 using a measuring receiver.

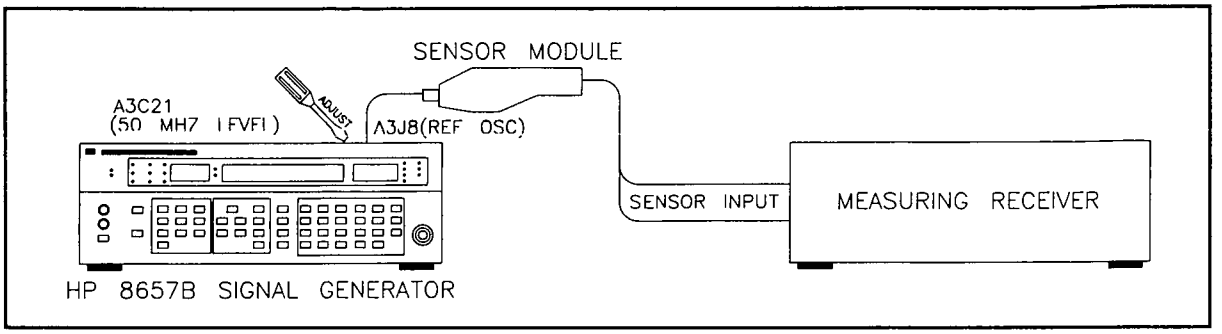

Figure 5–6. 50 MHz Reference Oscillator Level Adjustment Setup

Equipment

Measuring Receiver ..... HP 8902A
Sensor Module ..... HP 11722A
Cable BNC(m) to SMC(f) ..... HP 08662-60075
Adapter N(f) to BNC(m) ..... HP 1250-0077
Adapter BNC(f) to BNC(f) ..... HP 1250-0080

PROCEDURE

1. Set the measuring receiver with the sensor module precalibrated and connected as follows:

   Measurement ..... RF POWER
   Display ..... LOG

2. Disconnect coaxial cable W5 from A3J8 (50 MHz Reference Oscillator output). Connect the sensor module to A3J8 using the appropriate cable and adapters.
3. Press the FREQ key on the measuring receiver for calibration, then press the RF POWER key.
4. Adjust A3C21 (50 MHZ LEVEL ADJ) for a maximum RF Power reading from +16 dBm to +19 dBm. Do not adjust for a reading greater than +19 dBm.

NOTE

Do not remove the 50 MHz Section covers for this adjustment.

5. Disconnect the measuring receiver and reconnect W5 to A3J8.

Adjustment 7

122 MHZ HARMONIC ADJUSTMENT

- Service Sheet 9

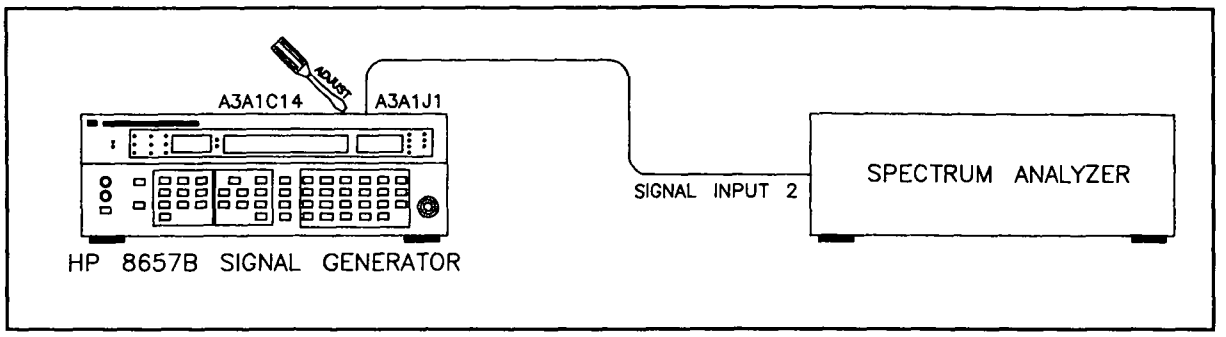

Figure 5–7. 122 MHz Harmonic Adjustment Setup

Description

The HP 8657B frequency is set to 539 MHz for a Low Frequency VCO Frequency of 61 MHz. The 122 MHz Harmonic is adjusted for a minimum.

Equipment

Spectrum Analyzer ..... HP 8562B
Cable BNC(m) to SMC(f) ..... HP 08662-60075
Adapter N(f) to BNC(m) ..... HP 1250-0077

Procedure

1. Set the spectrum analyzer as follows:

   Center Frequency ..... 95 MHz
   Frequency Span ..... 100 MHz
   Reference Level ..... 0 dBm

2. Set the HP 8657B as follows:

   Frequency ..... 539 MHz
   Amplitude ..... Any
   Modulation ..... Off

3. Connect the output of the A3A1 Assembly at A3A1J1 to the spectrum analyzer SIGNAL INPUT 2 using the appropriate cable and adapter (HP 1250-0077 and HP 08662-60075).

4. Adjust A3A1C14 for minimum 122 MHz harmonic.

Adjustment 8

FM CALIBRATION PRETUNE ADJUSTMENT

- Service Sheet 14

Description

The Low Frequency Loop is locked during this adjustment. The output of the integrator is adjusted so that the bottom of the integrator waveform is −6.0 volts. This adjustment assures that the VCO's tune voltage will have sufficient range.

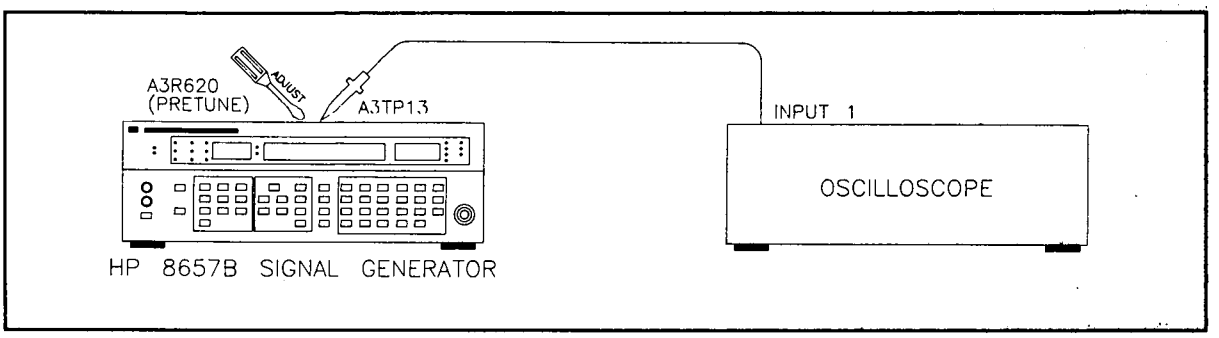

Figure 5–8a. FM Calibration Pretune Adjustment Setup

Equipment

Oscilloscope ..... HP 54100A/54110A
Oscilloscope Probe Pod (Chan 1) ..... HP 54003A

Procedure

1. Set the HP 8657B as follows:

   Frequency ..... 117 MHz
   Amplitude ..... Any
   Modulation ..... Off

2. Connect the oscilloscope probe to A3TP13, Integrator Output.

3. Set the oscilloscope as follows: (with AUTO-SCALE, the oscilloscope should preset to approximately the following conditions)

CHAN

Channel 1
V/div 1V
Offset ..... −6V
Probe 10:1
Coupling ..... dc, 1MΩ

TIME

Sec/div ..... 2 μs
Delay ..... 0 s
Reference ..... Center

TRIG

Mode ..... - Edge
Source ..... Chan 1
Slope ..... Neg

DISPLAY

Mode ..... Averaged
Graticule Type ..... Grid
Averages 4

4. Adjust A3R620 (PRETUNE) for a voltage of −6.0 volts ±0.5 volts at the bottom of the integrator waveform (the oscilloscope Delta V and marker functions can be used to set a reference line at - 6V as a calibration aid).

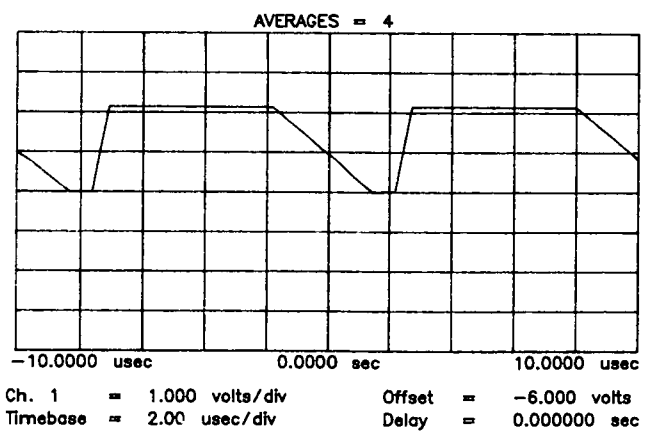

Figure 5–8b. Sample of Oscilloscope Display

Adjustment 9

API 1, 2, 3 AND 4 ADJUSTMENTS

- Service Sheet 12

Description

The API, Analog Phase Interpolation, spurious signals are adjusted for −60 dBc using a spectrum analyzer.

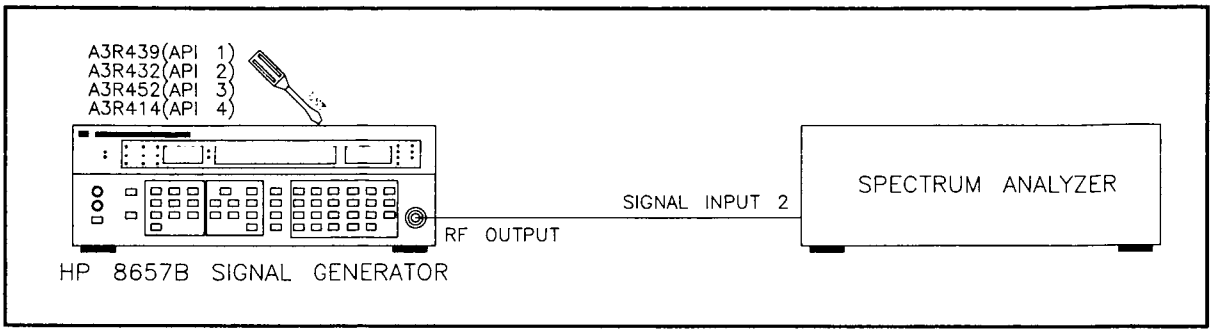

Figure 5–9. API 1, 2, 3 and 4 Adjustment Setup

Equipment

Spectrum Analyzer ..... HP 8562B
Cable (50 ohm coax, UG-21D/U type N (m) connectors) ..... HP 11500A

NOTE

The A3 Assembly must be fastened to RFI cover (MP12) with hex nuts before making API adjustments.

Procedure

1. Set the spectrum analyzer as follows:

   Center Frequency ..... 65 MHz
   Frequency Span ..... 10 kHz
   Reference Level ..... 0 dBm

2. Set the HP 8657B as follows:

   Frequency ..... 65 MHz
   Amplitude ..... 0 dBm
   Modulation ..... Off

3. Connect the RF OUTPUT of the HP 8657B to the spectrum analyzer as shown in Figure 5-9.
4. Change the HP 8657B frequency to 65.002 MHz.
5. Adjust A3R439 (API 1) so the spurious signals 1 and 2 kHz from the carrier are at minimum (less than −60 dBc).
6. Change the HP 8657B frequency to 65.0002 MHz.

7. Adjust A3R432 (API 2) so the spurious signals 1 and 2 kHz from the carrier are at minimum (less than −60 dBc).
8. Change the HP 8657B frequency to 65.00002 MHz.
9. Adjust A3R452 (API 3) so the spurious signals 1 and 2 kHz from the carrier are at minimum (less than −60 dBc).
10. Change the HP 8657B frequency to 65.00001 MHz.
11. Set the spectrum analyzer frequency span to 25 kHz.
12. Adjust A3R414 (API 4) so spurious signals 5 and 10 kHz from the carrier are at minimum (less than −60 dBc).

Adjustment 10

PEDESTAL ADJUSTMENT

- Service Sheet 13

Description

The Sample and Hold circuit current is adjusted for a spurious signal less than -60 dBc using a spectrum analyzer.

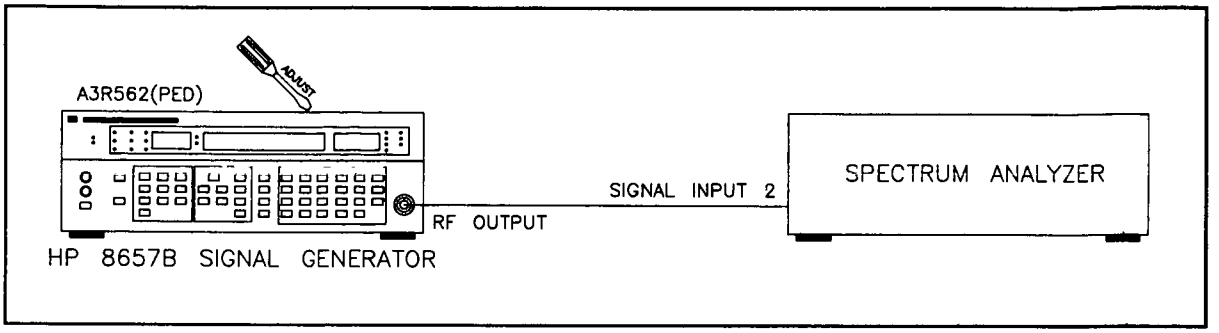

Figure 5–10. Pedestal Adjustment Setup

Equipment

Spectrum Analyzer ..... HP 8562B
Cable (50 ohm coax, UG-21D/U type N (m) connectors ..... HP 11500A

PROCEDURE:

1. Set the spectrum analyzer as follows:

   Center Frequency ..... 65.1 MHz
   Frequency Span ..... 10 kHz
   Reference Level ..... -30 dBm

2. Set the HP 8657B as follows:

   Frequency ..... 65 MHz
   Amplitude ..... Any
   Modulation ..... Off

3. Connect the RF OUTPUT of the HP 8657B to the spectrum analyzer as shown in Figure 5-10.
4. Adjust A3R562 (PED) so the spurious signal 100 kHz from the carrier is at minimum (less than -60dBc). Frequency Span settings on the spectrum analyzer can be reduced to as low as 200Hz and Center Frequencies changed to facilitate viewing the spurious signal.

Adjustment 11

DC FM ADJUSTMENT

- Service Sheet 15

Description

The DC FM spurious signals are adjusted using a spectrum analyzer and a dc power supply.

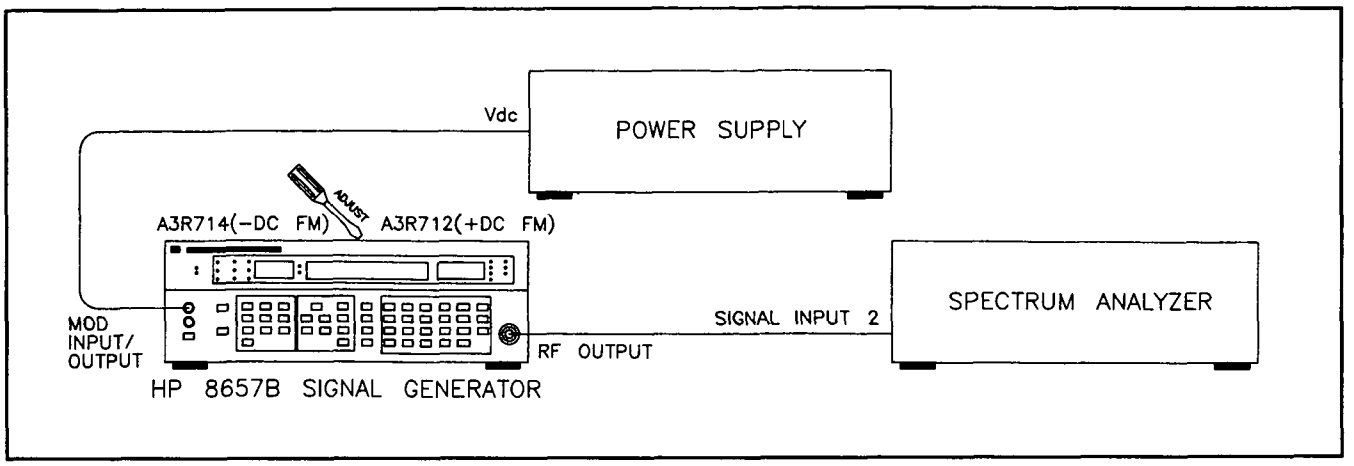

Figure 5–11. DC FM Adjustment Setup

Equipment

Spectrum Analyzer ..... HP 8562B
Power Supply ..... HP 6214B
Cable (50 ohm coax, UG-21D/U type N(m) connectors) ..... HP 11500A
Cable (112 cm 50 ohm coax, UG-88C/U BNC to dual banana plug) ..... HP 11001-60001

Procedure

1. Set the spectrum analyzer as follows:

   Center Frequency ..... 65 MHz
   Frequency Span ..... 10 kHz
   Reference Level ..... 0 dBm

2. Set the power supply as follows:

   Meter ..... Volts
   Voltage ..... 1 Vdc

3. Set the HP 8657B as follows:

   Frequency ..... 65 MHz
   Amplitude ..... 0 dBm
   Modulation ..... DC FM, 3 kHz

4. Connect the HP 8657B RF OUTPUT to the spectrum analyzer SIGNAL INPUT 2 and the MOD INPUT/OUTPUT to the power supply +1 Vdc as shown in Figure 5-11.

NOTE

The LO EXT Modulation annunciator remains on regardless of the dc input level applied to the MOD INPUT/OUTPUT connector.

5. Adjust A3R712 (+DC FM) so spurious signals are −50 dBc.
6. Connect −1 Vdc to the MOD INPUT/OUTPUT.
7. Adjust A3R714 (−DC FM) so spurious signals are −50 dBc.

Adjustment 12

VOLTAGE OFFSET ADJUSTMENT

- Service Sheet 7

Description

The DC offset of the FM Deviation Summing Amplifier is adjusted for 0.000 Vdc ±0.001 Vdc at A11TP3.

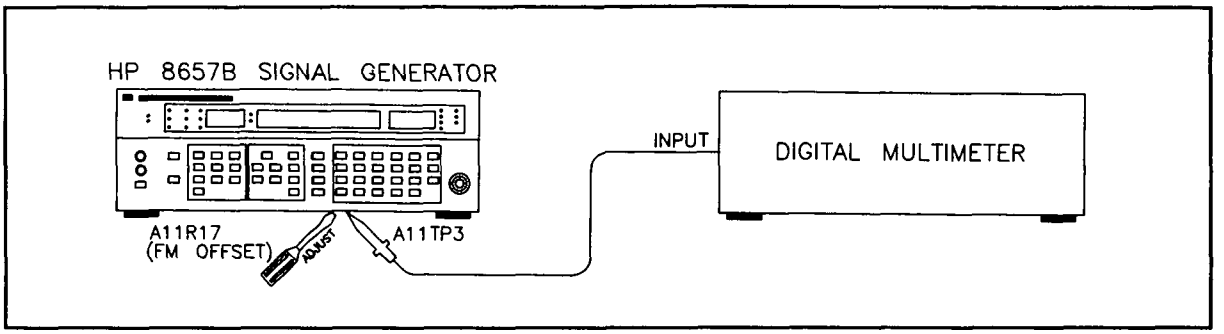

Figure 5–12. DC FM Offset Adjustment Setup

Equipment

Digital Multimeter ..... HP 3466A

NOTE

The A11 Assembly must be fastened in the instrument before making the Voltage Offset Adjustment

Procedure

1. Set the digital multimeter as follows:

   Function ..... Vdc
   Range ..... 200 mV

2. Set the HP 8657B as follows:

   Frequency ..... 65 MHz
   Amplitude ..... Any
   Modulation ..... DC FM, 99 kHz

3. Remove any signal connected to the HP 8657B MOD INPUT/OUTPUT connector.
4. Connect the digital multimeter to A11TP3 as shown in Figure 5-12.
5. Adjust A11R17 (FM OFFSET ADJ) for 0.000 Vdc ±0.001 Vdc.

Adjustment 13

400 MHZ BANDPASS FILTER ADJUSTMENT

- Service Sheet 3

Description

The 400 MHz Bandpass Filter is adjusted to peak the 800 MHz signal at RF Test Point A8TP3 using a measuring receiver.

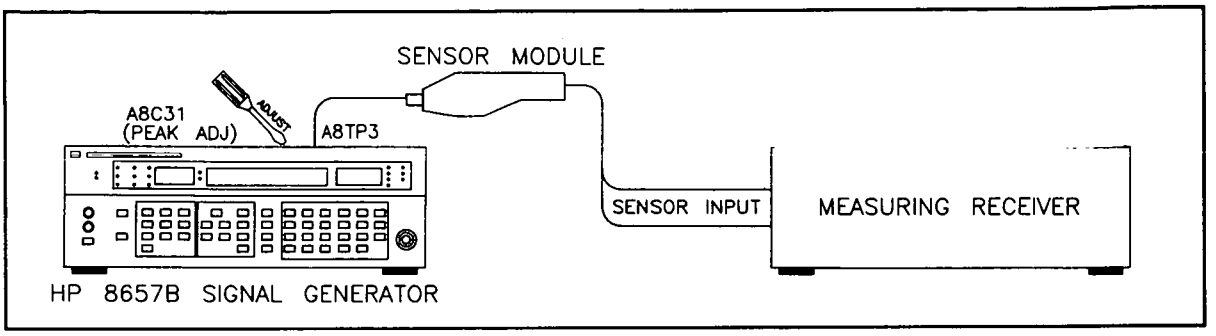

Figure 5–13. 400 MHz Bandpass Filter Adjustment Setup

Equipment

Measuring Receiver ..... HP 8902A
Sensor Module ..... HP 11722A
Adapter Probe ..... HP 1250-1598
Adapter N(f) to BNC(m) ..... HP 1250-0077
Adapter BNC(f) to BNC(f) ..... HP 1250-0080
Cable BNC(m) to SMC(f) ..... HP 08662-60075

Procedure:

1. Set the measuring receiver with the sensor module precalibrated and connected as follows:

   Measurement ..... RF POWER
   Display ..... LOG

2. Set the HP 8657B as follows:

   Frequency ..... Any
   Amplitude ..... −10 dBm
   Modulation ..... Off

3. Zero the measuring receiver and wait for the zero LED to go out.
4. Connect the sensor module to the HP 8657B at RF Test Point A8TP3 using an adapter (HP part number 1250-1598).
5. Tune the measuring receiver to 800 MHz and adjust A8C31 (PEAK ADJ) for a maximum RF Power reading.

Adjustment 14

690 TO 740 MHZ IF COMPENSATION ADJUSTMENT AND ATTENUATOR PAD SELECT

- **Service Sheets 1, 3, and 9**

Description

A function generator is used to sweep the A3A1 Low Frequency VCO and provide a swept 690 to 740 MHz IF signal at A4TP3. The IF signal is adjusted for flatness within 3 dB. The average power level of the IF signal is then found and an attenuator pad is selected to provide an average IF input level of −9 dBm to mixer A4U1.

NOTE

The 690 to 740 MHz IF Compensation Adjustment and Attenuator Pad Select must be performed whenever the A3A1, A4, A8, or FL1 assemblies are replaced.

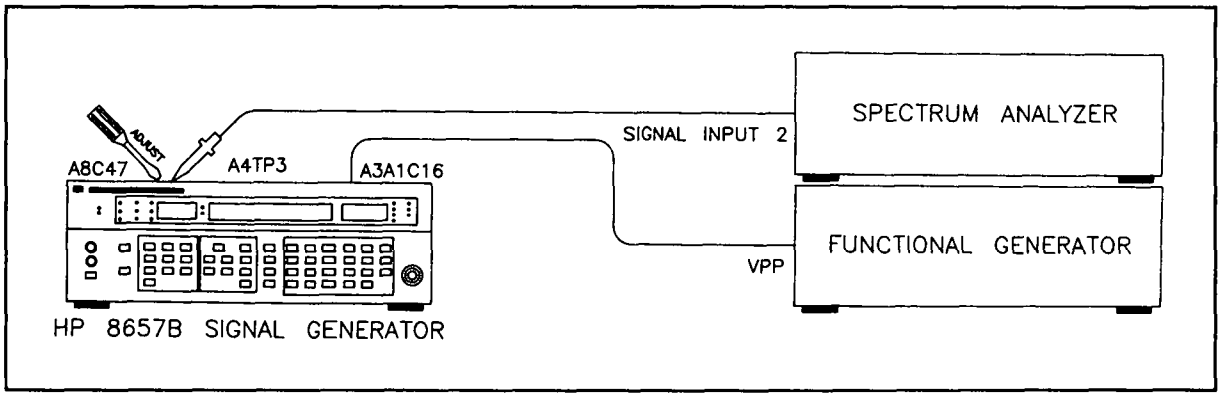

Figure 5–14. 690 to 740 MHz IF Compensation and Attenuator Pad Select

Equipment

Spectrum Analyzer	HP 8562A
Function Generator	HP 3312A
Cable BNC	HP 8120-1840
Test Leads alligator clips to BNC	HP 8120-1292
Adapter N(f) to BNC(m)	HP 1250-0077
Adapter Probe	HP 1250-1598
Cable BNC(m) to SMC(f)	HP 08662-60075

Procedure

1. Set the HP 8657B as follows:

   Frequency ..... 700 MHz
   Amplitude ..... Any
   Modulation ..... Off

2. Set the function generator as follows:

   Frequency ..... 3 kHz
   Function ..... Triangle Wave
   Offset ..... Ov
   Amplitude Range ..... 10 vpeak
   Symmetry ..... Cal
   Modulation ..... Off

3. Preset the spectrum analyzer and set as follows:

   RF Input ..... Input 2
   Start Frequency ..... 690 MHz
   Stop Frequency ..... 740 MHz
   Reference Level ..... 0 dBm
   Scale ..... Log 5dB/Div
   Res BW ..... Max
   Sweep ..... 0.5 sec

4. Remove jumper A3W6 and connect the function generator to the Low Frequency VCO at feedthrough capacitor A3A1C16 using the appropriate cable and adapter.

NOTE

If A4R6 and A4R7 (P/O selectable attenuator pad) are already in the A4 assembly, they must be isolated from the circuit before proceeding with the next step. Replacement A4 assemblies are shipped from the factory without the attenuator pad installed.

5. Connect the spectrum analyzer SIGNAL INPUT 2 to the HP 8657B at A4TP3 using the appropriate cable and adapters (HP 1250-0780, HP 08662-60075, and HP 1250-1598).

6. If necessary, Adjust the amplitude and offset of the function generator until the swept IF signal displayed on the spectrum analyzer starts just at 690 MHz and stops just at 740 MHz.

7. Adjust the spectrum analyzer's reference level so that the highest level of the IF signal is even with the top graticule on the CRT.

8. Set the scale of the spectrum analyzer to display 1 dB/Div and adjust the reference level so that the swept IF signal is centered in the spectrum analyzer's display.

9. Adjust A8C47 until the difference between the maximum and minimum IF levels is $\leq$ 3 dB.

10. Find the average IF level by dividing the difference between the maximum and minimum IF levels by 2, and then adding the result to the minimum IF level.

11. Refer to Table 5-1 (Factory Selected Components) and select the values of A4R6, R7, and R10 necessary for an average IF level of −9 dBm into mixer A4U1.

Adjustment 15

NOTCH FILTER ADJUSTMENTS

- Service Sheet 1

Description

Jumper A4W4 is moved to place the HP 8657B in a mode to continuously ramp the High Frequency Loop Amplifier and to sweep the High Frequency VCO. The HP 8657B frequency is set to 765 MHz to select the 50 MHz IF and to not select the 50 MHz Notch Filter. The detected beat notes are monitored with an oscilloscope and the 350, 300, 250, 200, 150, and 100 MHz Notch Filters are adjusted to minimize their associated beat notes. The HP 8657B's frequency is then set to 965 MHz to not select the 50 MHz IF. The 50 MHz Notch Filter is adjusted to minimize it's beat note. The HP 8657B frequency is then set to 1015 MHz and adjusted to maximize the 300 MHz beat note.

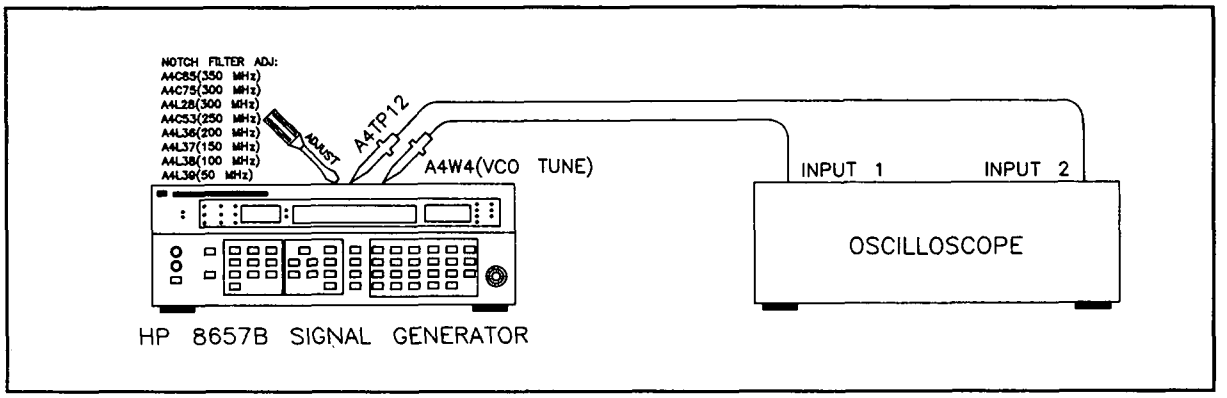

Figure 5–15a. Notch Filters Adjustment Setup

Equipment

Oscilloscope ..... HP 54100A
Oscilloscope Probe (2 required) ..... HP 54003A

Procedure

1. On the HP 8657B move A4W2 to the LOCK CANCEL position. This places the HP 8657B in a continual ramp and sweep mode.
2. Connect the oscilloscope channel 1 probe to A4W4. Connect the channel 2 probe to A4TP12.

3. Set the HP 8657B as follows:

Frequency ..... 765 MHz
Amplitude ..... -3 dBm
Modulation ..... Off

4. Set the oscilloscope as follows: (settings are approximate, variations in voltages and times may require alternate settings)

CHANNEL 1

Volts/Div ..... 500 mV
Display ..... Off
Offset ..... 105 mV

CHANNEL 2

Volts/Div ..... 20 mV
Display ..... On
Offset ..... 32 mV

TIMEBASE

Sec/Div ..... 1 mSec
Delay ..... 0 mS
Delay Ref ..... Center

TRIGGER

Source ..... Chan 1
Level ..... 105 mV
Slope ..... Neg

DISPLAY

Split Screen ..... Off
Graticle ..... Grid
Mode ..... Normal
Persistence ..... Adjust As Required

5. The oscilloscope display for nonadjusted Notch Filters is shown in Figure 5-15b.

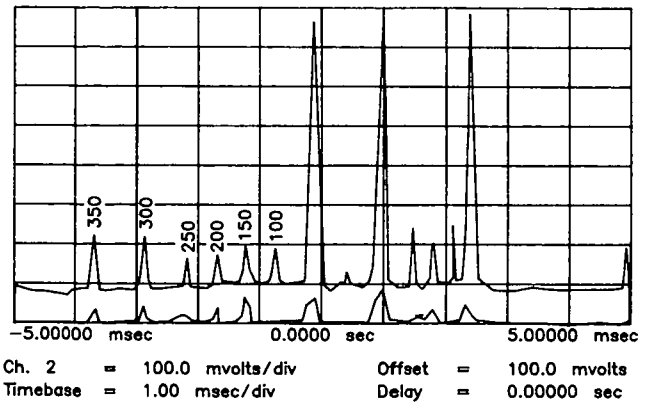

Figure 5–15b. Frequency Response of Notch Filters, 765 MHz Setting.

6. Observe the oscilloscope Chan 2 display (beat notes) and refer to Figure 5-15b. Adjust A4L38 (100 MHz Notch Filter) until you see the 100 MHz beat note change on the display, then adjust the beat note for minimum amplitude.
7. Adjust A4L37 (150 MHz Notch Filters) for minimum 150 MHz beat note.
8. Adjust A4L36 (200 MHz Notch Filter) for minimum 200 MHz beat note.
9. Adjust A4C53 (250 MHz Notch Filter) for minimum 250 MHz beat note.
10. Adjust A4L28 (300 MHz Notch Filter) for minimum 300 MHz beat note.
11. Adjust A4C75 (300 MHz Notch Filter) for minimum 300 MHz beat note.
12. Adjust A4C85 (350 MHz Notch Filter) for minimum 350 MHz beat note.
13. Set the HP 8657B frequency to 965 MHz and observe the oscilloscope Chan 2 display. The beat note levels should resemble those shown for channel 2 in Figure 5-15c. (the 50 MHz beatnotes are shown with nonadjusted levels.) Adjust A4L39 (50 MHz Notch Filter) until the 50 MHz beat notes are at their minimum amplitude. Adjust A4C75 to maximize the 250 MHz signal while keeping the 300 MHz signal at minimum.

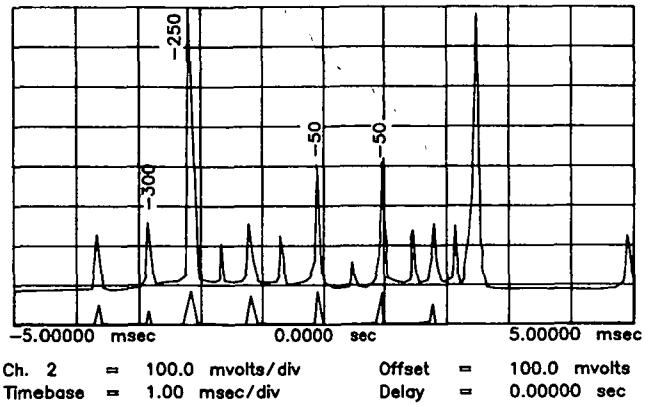

Figure 5–15c. Frequency Response of Notch Filters, 965 MHz Setting.

14. Set the HP 8657B to a frequency of 1015 MHz and observe the oscilloscope Chan 2 display. The beat note levels should resemble those shown for channel 2 in Figure 5-15d. Adjust A4C85 to maximize the 300 MHz beat note while keeping the 350 MHz beat note at a minimum.

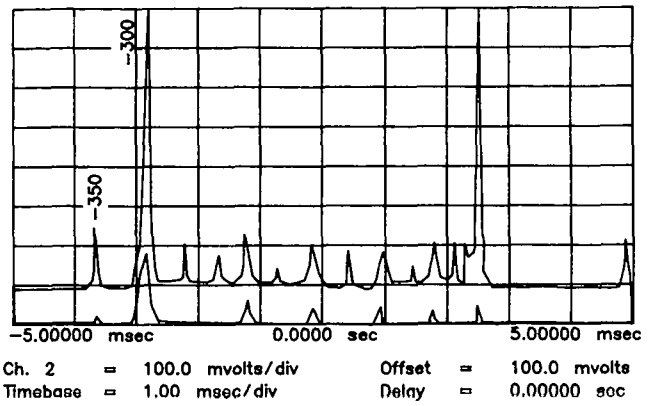

Figure 5–15d. Frequency Response of Notch Filters, 1015 MHz Setting.

15. When notch filter adjustments are complete, return A4W4 to the lock position.

Adjustment 16

400 MHZ NOTCH FILTER ADJUSTMENT

- Service Sheet 1

Description

The 400 MHz Notch Filter is in the circuit all of the time and is adjusted for 1 MHz offset spurious signals from the selected frequency of 551 MHz.

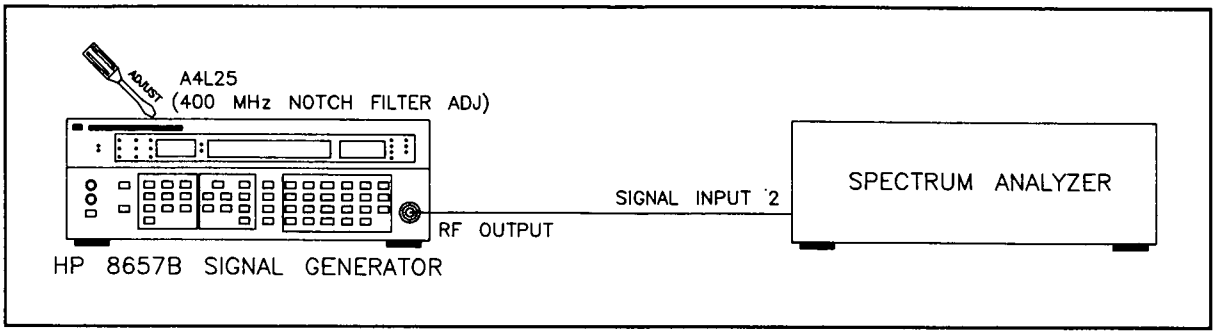

Figure 5–16. 400 MHz Notch Filter Adjustment Setup.

Equipment

Spectrum Analyzer ..... HP 8562B
Cable (N(m) 2 183 cm) ..... HP 11500A

Procedure

1. Set the spectrum analyzer as follows:

   Center Frequency ..... 550 MHz
   Frequency Span ..... 10 MHz
   Reference Level ..... 0 dBm
   Res BW ..... 30 kHz

2. Set the HP 8657B as follows:

   Frequency ..... 550 MHz
   Amplitude ..... 0 dBm
   Frequency Increment ..... 1 MHz
   Modulation ..... Off

3. Connect the HP 8657B RF OUTPUT to spectrum analyzer SIGNAL INPUT 2.
4. Step the HP 8657B frequency in 1 MHz steps from 547 to 553 MHz. Adjust A4L25 for minimum spurious signals in the frequency range. Ensure that all spurious signals are <60 dB.

Adjustment 17

LEVEL AND ALC LOOP DETECTOR ADJUSTMENTS

- Service Sheets 4 and 7

DESCRIPTION

First, the reference level to the Level Digital to Analog Converter (DAC) is adjusted for +7.00 dBm ±0.02 dB at the HP 8657B RF OUTPUT. Then the detector bias reference level to the ALC Amplifier is adjusted.

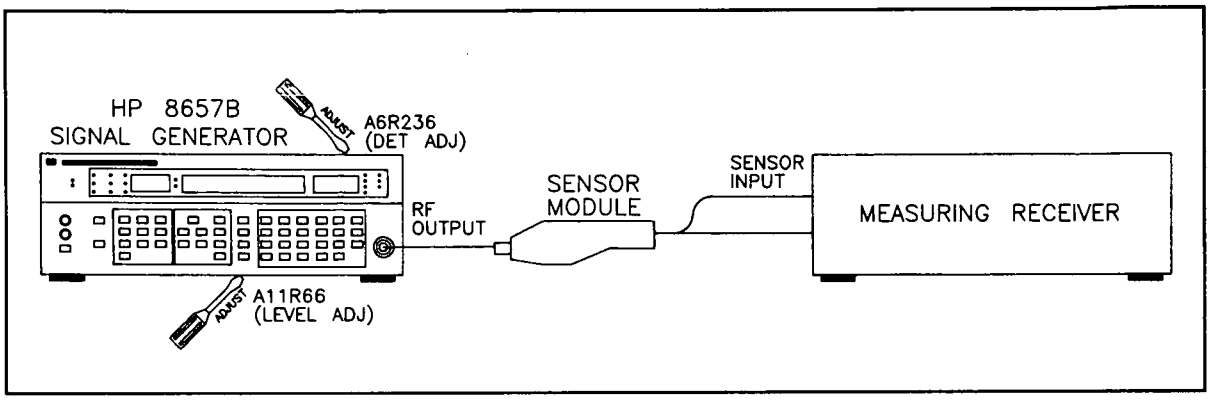

Figure 5–17. Level and ALC Loop Detector Adjustment Setup

EQUIPMENT

Measuring Receiver ..... HP 8902A
Sensor Module ..... HP 11722A

PROCEDURE

1. Set the measuring receiver with the sensor module precalibrated and connected as follows:

   Measurement ..... RF POWER
   Display ..... LOG

2. Set the HP 8657B as follows:

   Frequency ..... 820 MHz
   Amplitude ..... +7 dBm
   Modulation ..... Off
   Amplitude Increment ..... 10 dB

NOTE

Before making the adjustment, the HP 8657B must be warmed up for a minimum of 1/2 hour.

3. Zero the sensor module and connect it to the RF OUTPUT connector on the HP 8657B.
4. Tune the measuring receiver to the HP 8657B frequency by pressing the FREQ key. Press the RF POWER key and adjust A11R66 (LEVEL ADJ) for a reading of +7 dBm ±0.2 dB.
5. Press the RATIO key on the measuring receiver to set a reference level of 0 dB.
6. Step the HP 8657B amplitude down to −3 dBm.
7. Adjust A6R236 (LIN) for an RF Power level of −10.00 dB ±0.1 dB on the measuring receiver.
8. Repeat steps 4, 6, and 7 until both readings are within the required tolerance.

Adjustment 18

AM% AND ALC LOOP AM ADJUSTMENTS

- Service Sheets 4 and 7

Description

The reference level to the AM% Digital to Analog Converter (DAC) is adjusted for an average amplitude modulation of 21.21%. The AM reference to the ALC Amplifier is adjusted for minimum distortion of the modulation.

NOTE

The AM Offset, and Level and ALC Loop Adjustments must be performed before performing these adjustments. Refer to Adjustment 4 and Adjustment 17.

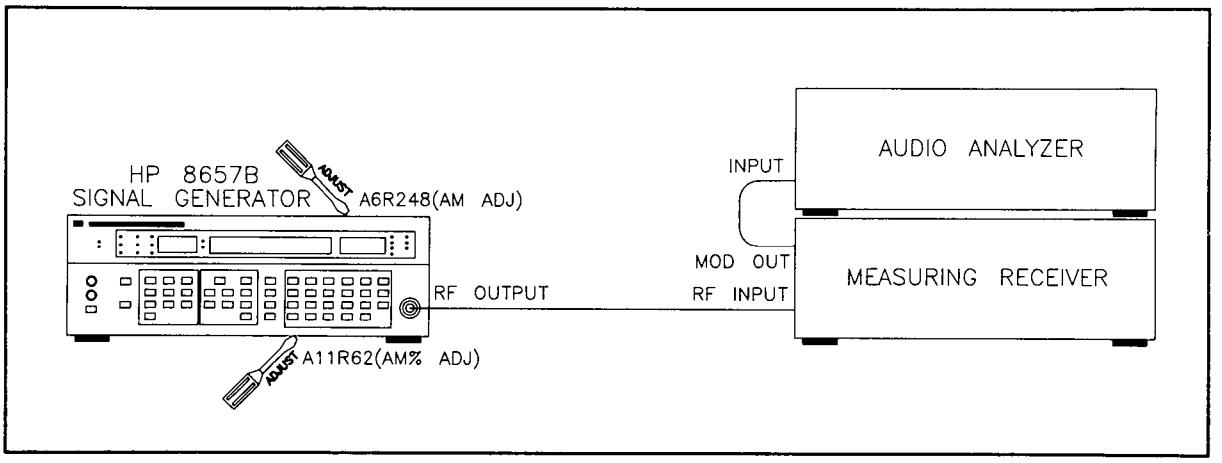

Figure 5–18. AM% and ALC Loop AM Adjustments Setup

Equipment

Measuring Receiver ..... HP 8902A
Audio Analyzer ..... HP 8903B

Procedure

1. Set the measuring receiver as follows:

   Measurement ..... AM
   Detector ..... AVG
   HP Filter ..... 50 Hz
   LP Filter ..... 15 kHz

2. Set the HP 8657B as follows:

   Frequency ..... 200 MHz
   Amplitude ..... +4 dBm
   Modulation ..... AM 30%
   Source ..... 1 kHz (Int.)
   Amplitude Increment ..... 8 dB

3. Connect the measuring receiver to the RF OUTPUT connector on the HP8657B and connect the distortion analyzer as shown in Figure 5-18.

4. Adjust A11R62 (AM% ADJ) for a reading of 21.21% on the measuring receiver.

NOTE

Do not remove any of the internal RF covers for this adjustment.

5. Set the HP 8657B as follows:

   Frequency ..... 200 MHz
   Amplitude ..... −4 dBm
   Modulation ..... AM 90%

6. Set the measuring receiver as follows:

   Detector ..... $\frac{PK^{+}+PK-}{2}$

7. Adjust A6R248 (AM ADJ) for a minimum reading on the measuring receiver as close to 90% as possible, while keeping the 1 kHz audio distortion less than 4%. Select the Audio Distortion measurement on the measuring receiver for a 1 kHz audio signal to measure the distortion.

Adjustment 19

AM% IN THE DOUBLE BAND ADJUSTMENTS

- **Service Sheets 4 and 7**

Description

The AM% level to the doubler is adjusted for a Peak - setting of 30%.

NOTE

The AM% and ALC Loop AM Adjustments must be performed before performing these adjustments. Refer to Adjustment 18.

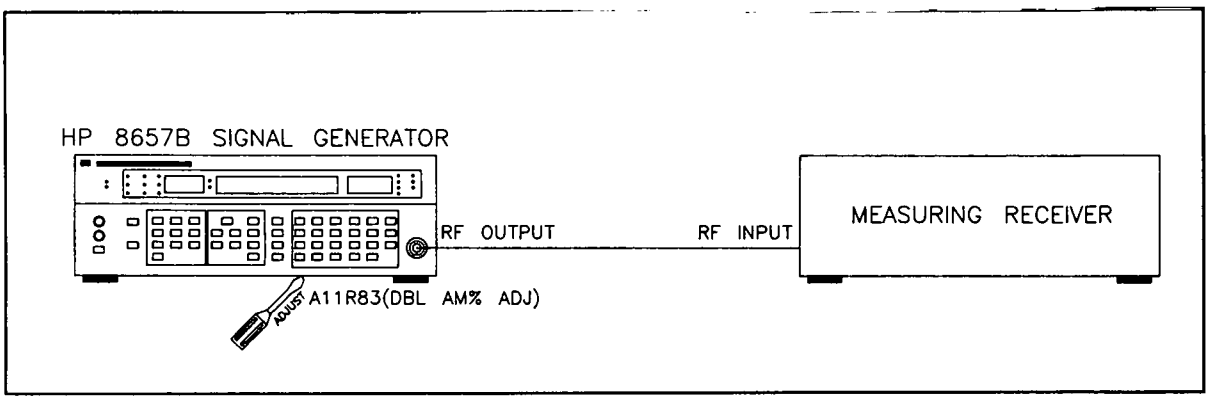

Figure 5–19. AM% and ALC Loop AM Adjustments Setup

Equipment

Measuring Receiver ..... HP 8902A

Procedure

1. Set the measuring receiver as follows:

   Measurement ..... AM
   Detector ..... $\frac{PK^{+}+PK^{-}}{2}$
   HP Filter ..... 50 Hz
   LP Filter ..... 15 kHz

2. Set the HP 8657B as follows:

   Frequency ..... 1200 MHz
   Amplitude ..... +4 dBm
   Modulation ..... AM 30%
   Source ..... 1 kHz (Int.)

3. Connect the measuring receiver to the RF OUTPUT connector on the HP 8657B.
4. Adjust A11R83 (DBL AM% ADJ) for a reading of 30% on the measuring receiver.

NOTE

Do not remove any of the internal RF covers for this adjustment.

Adjustment 20

FM IN-BAND GAIN ADJUSTMENT

- Service Sheet 15

Description

An external modulation signal whose frequency is outside the Low Frequency Loop bandwidth is used to frequency modulate the HP 8657B. The frequency modulation is measured with the EXT FM of the HP 8657B set to 50 kHz for a reference. The external modulation signal is changed to 100 Hz and the FM IN-BAND GAIN is adjusted for the same FM peak deviation.

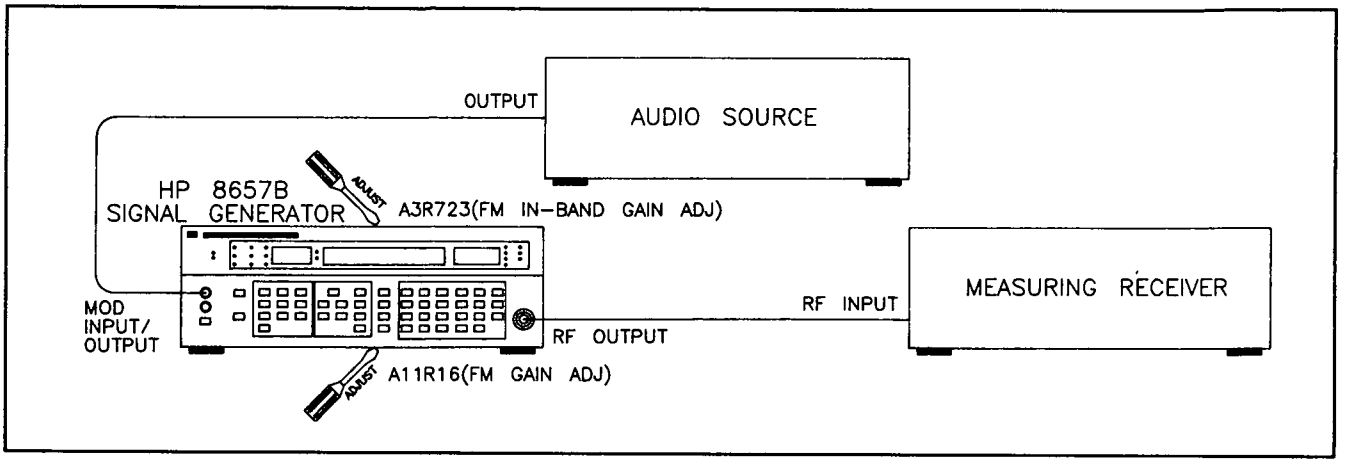

Figure 5–20. FM In-band Gain Adjustment Setup

Equipment

Measuring Receiver ..... HP 8902A
Audio Source ..... HP 8903B
Cable (50 ohm coax, UG-21D/U type N(m) connectors) ..... HP 11500A
Cable, BNC Connectors ..... HP 10503A

Procedure

1. Set the measuring receiver as follows:

   Measurement ..... FM, PEAK+

2. Set the audio source as follows:

   Frequency ..... 20 kHz
   Amplitude ..... 1.414 Vac

3. Set the HP 8657B as follows:

   Frequency ..... 65 MHz
   Amplitude ..... 0 dBm
   Modulation ..... EXT FM, 50 kHz

4. Connect the HP 8657B RF OUTPUT to the measuring receiver INPUT, and the HP 8657B MOD INPUT/OUTPUT to the audio source OUTPUT as shown in Figure 5-19. The HP 8657B LO EXT and HI EXT LED's should be out. Also insure that the HP 8657B INT 1 kHz modulation source is turned off.
5. Adjust A11R16 (FM Gain ADJ) if necessary, for a reading of 50.0± 0.2 KHz on the measuring receiver.

NOTE

If it is necessary to adjust A11R16, the FM Deviation Adjustment 21 must be performed.

6. Set the measuring receiver to RATIO and the audio source frequency to 100 Hz.
7. Adjust A3R723 (FM IN-BAND GAIN ADJ) for a reading of 100% on the measuring receiver.
8. Repeat steps 6 through 8 and readjust A3R723 if required.

Adjustment 21

FM DEVIATION ADJUSTMENT

- Service Sheet 7

Description

The FM deviation is adjusted with a maximum FM peak deviation of 99 kHz entered into the HP 8657B. The carrier frequency is stepped down in 10 MHz steps from 1030 to 990 MHz and A11R16 is adjusted for an equal error around 99 kHz deviation.

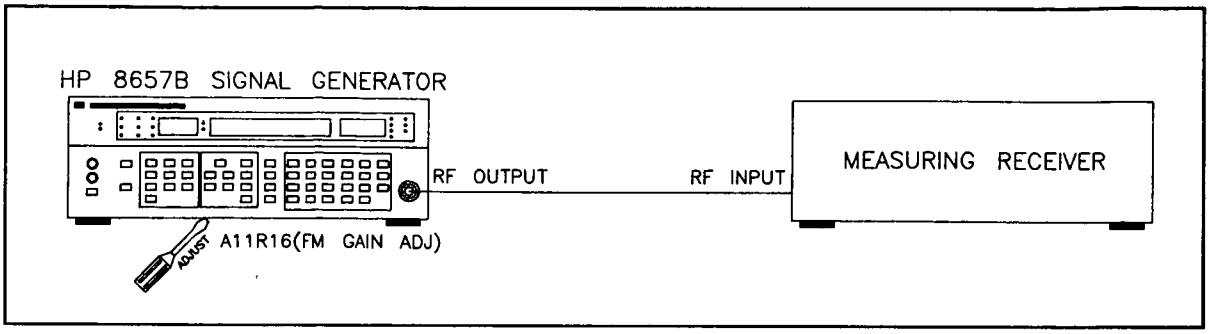

Figure 5–21. FM Deviation Adjustment Setup

Equipment

Measuring Receiver ..... HP 8902A
Cable (50 ohm coax, UG-21D/U type N (m) connectors) ..... HP 11500A

Procedure

1. Set the measuring receiver as follows:

   Measurement ..... FM
   Detector ..... +Peak
   HP Filter ..... 300 Hz
   LP Filter ..... 3 kHz

2. Set the HP 8657B as follows:

   Frequency ..... 1040 MHz
   Frequency Increment ..... 10 MHz
   Amplitude ..... +4 dBm
   Modulation ..... FM 99 kHz
   Source ..... 1 kHz (Int.)

3. Connect the measuring receiver input to the RF OUTPUT connector on the HP 8657B.
4. Adjust A11R16 (FM GAIN ADJ) for a 99.0 kHz deviation reading on the measuring receiver.
5. Step the frequency down from 1030 to 990 MHz and record the deviation at each of the 10 MHz steps. Each frequency must be keyed into the measuring receiver.

6. Readjust A11R16 for equal error ±2 kHz from 99 kHz at the frequencies of maximum and minimum peak kHz deviation.

_____ 1030 MHz

_____ 1020 MHz

_____ 1010 MHz

_____ 1000 MHz

_____ 990 MHz

7. The formula of (Max - Min) / 2 plus 99 kHz equals the calibration point for the carrier frequency with maximum FM deviation.

Adjustment 22

DC FM OFFSET ADJUSTMENT

- Service Sheet 7

Description

The DC Offset of the FM Deviation Amplifier is adjusted for an output frequency error of +10 Hz with DC FM selected.

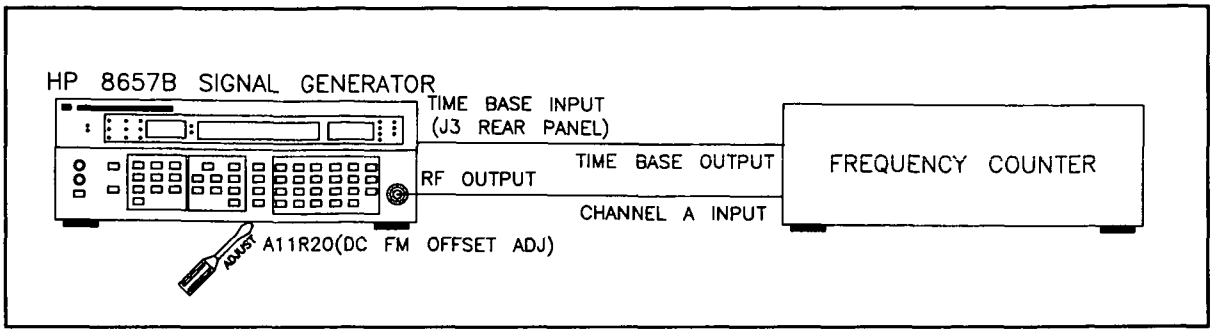

Figure 5–22. DC FM Frequency Offset Adjustment Setup

Equipment

Frequency Counter ..... HP 5328B
Adapter, N(m) to BNC (f) ..... HP 1250-0780
Cable, BNC (2 EA) ..... HP 10503A

NOTE

The A3 Assembly must be fastened to RFI cover (MP22) with hex nuts and the A11 Assembly fastened in the instrument before making the DC FM Adjustment.

Procedure

1. Set the frequency counter as follows:

   Frequency ..... Input A

2. Set the HP 8657B as follows:

   Frequency ..... 65 MHz
   Amplitude ..... 0 dBm
   Modulation ..... DC FM, 99 kHz

3. Connect the HP 8657B RF OUTPUT to the frequency counter CHANNEL A INPUT and the counter time base OUT to the HP 8657B Time Base INPUT as shown in Figure 5-21.

4. Adjust A11R20 (DC FM OFFSET ADJ) for a frequency counter reading of 65.000000 MHz ±10 Hz.

Adjustment 23

OPTION 001 10 MHZ REFERENCE OSCILLATOR FREQUENCY ADJUSTMENT

- **Service Sheet 25**

Description

The Option 001 10 MHz Reference Oscillator frequency is adjusted to 10.000 MHz ±10.0 Hz using a frequency counter.

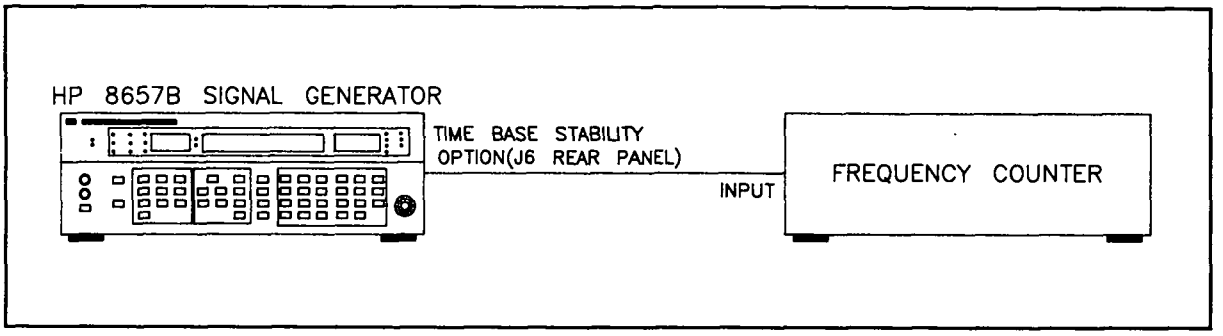

Figure 5–23. 10 MHz Reference Oscillator Frequency Adjustment Setup

Equipment

Frequency Counter ..... HP 5328B

NOTE

Before making the adjustment, the HP 8657B must be warmed up for a minimum of 24 hours.

Procedure

1. Remove the COARSE and FINE screws on the oscillator cover (accessed through the rear panel).
2. Connect the frequency counter to the TIME BASE HIGH STABILITY OPTION connector (J6) on the rear-panel of the HP 8657B.
3. Adjust the COARSE and FINE adjustments for a reading of 10.000 MHz ±10 Hz on the frequency counter.
4. Replace the COARSE and FINE screws.