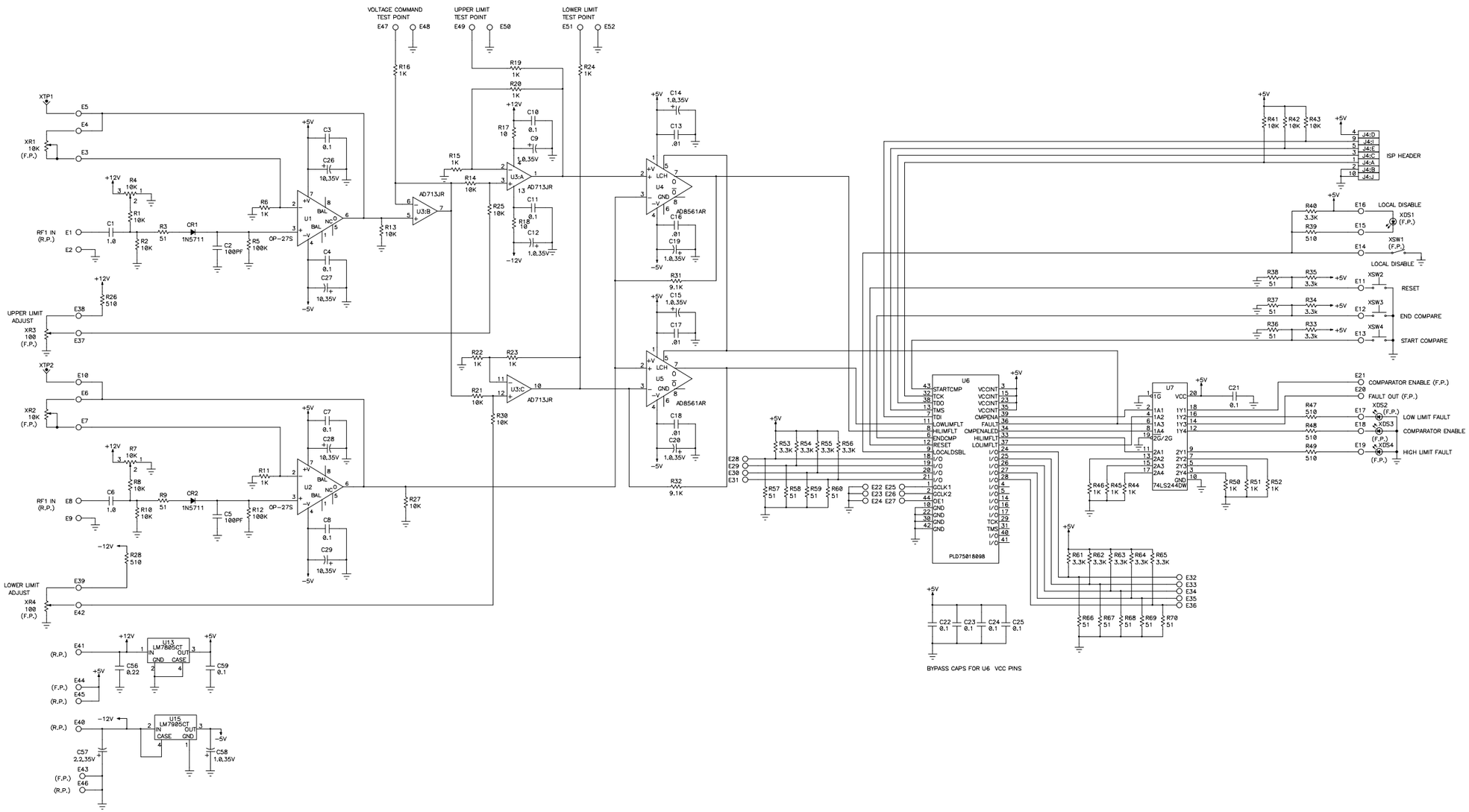

NOTES: UNLESS OTHERWISE SPECIFIED

1. ALL RESISTORS VALUE ARE IN OHMS, 1/8W, +/- 5%.
2. ALL CAPACITORS VALUE ARE IN MICRO FARADS, +/- 10%.

REV	ZONE	ECN NO.	DESCRIPTION	BY	DATE	CHK	APP

-3	-2	-1	REF.DESIGNATOR	ITEM NO.	DESCRIPTION	MATL.DWG NO.,SPN, NO.
QTY REQD						

OUTSTANDING ECN NUMBERS

INTERPRET IN GENERAL ACCORDANCE WITH ASME Y14.24M-1989

UNLESS OTHERWISE SPECIFIED

DIMENSIONS ARE IN INCHES
DECIMAL TOLERANCES
X ±.06
XX ±.02
XXX ±.005
ANGULAR TOLERANCE ±1°

Q.A. NEXT ASSEMBLY

RHIC

DRAWN BY	M.JACOBELLIS	11/6/95
DESIGN APPROVAL	D.MULLALY	12-8-95
CHECKED BY	M.WITTE	12-8-95
ENGINEER APPROVAL	M.WITTE	12-8-95
SUPERVISOR APPROVAL		
Q.A. APPROVAL		

BROOKHAVEN NATIONAL LABORATORY
ASSOCIATED UNIVERSITIES, INC
UPTON, N.Y. 11973

TITLE: SCHEMATIC DIAGRAM RF PROTECTION

SIZE: E | DRAWING NUMBER: RD75018089 | REV. A

SCALE | WEIGHT | SHEET 1 OF 1

DWG NO RD75018089 | REV A | SHT 1 OF 1