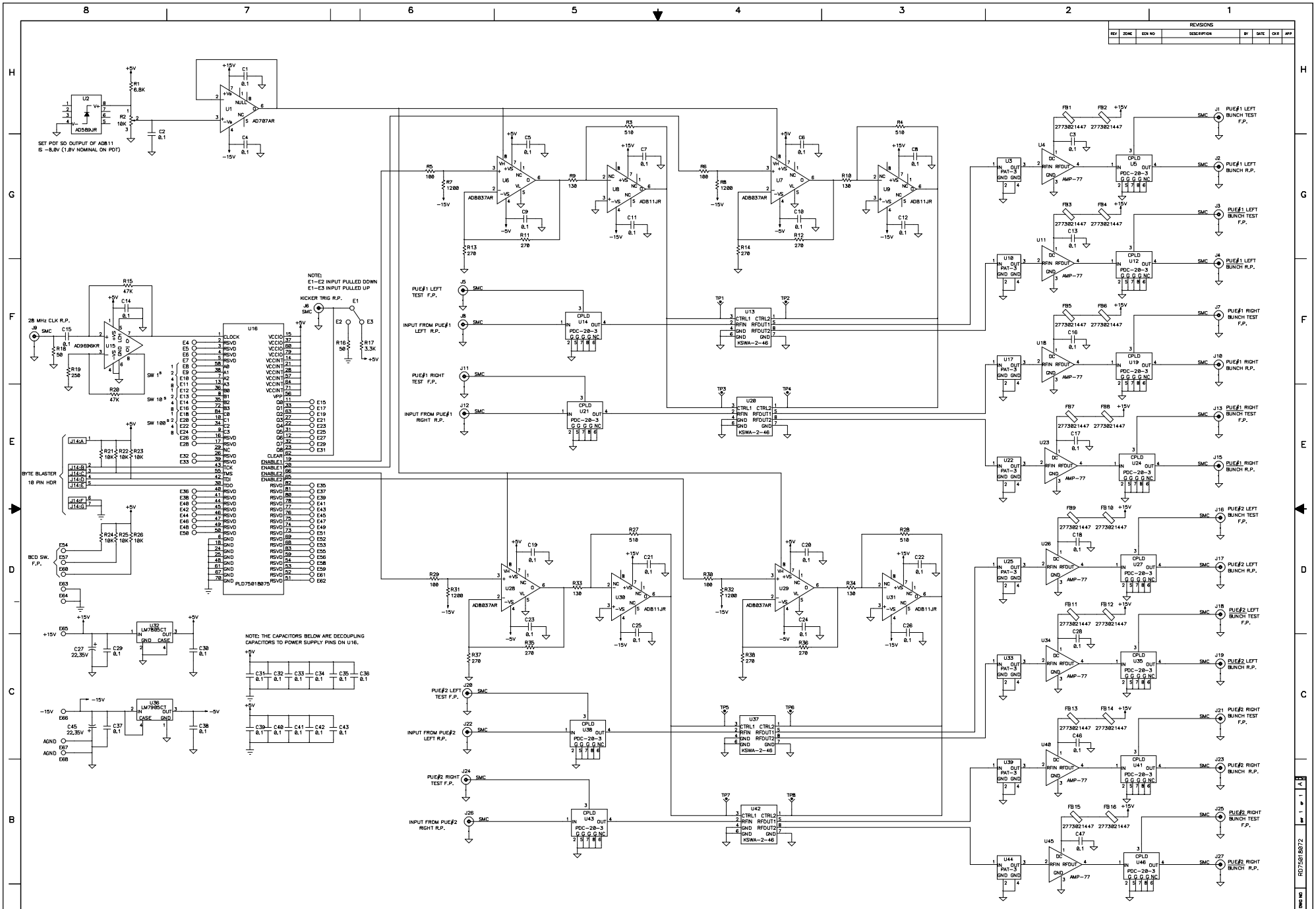

REVISIONS
REV ZONE ECN NO DESCRIPTION BY DATE CKR APP
SET POT SO OUTPUT OF AD811 IS -8.0V (1.0V NOMINAL ON POT)
NOTE: E1-E2 INPUT PULLED DOWN E1-E3 INPUT PULLED UP
KICKER TRIG R.P.
28 MHz CLK R.P.
BYTE BLASTER 10 PIN HDR
BCD SW. F.P.
NOTE: THE CAPACITORS BELOW ARE DECOUPLING CAPACITORS TO POWER SUPPLY PINS ON U16.
PUE#1 LEFT TEST F.P.
INPUT FROM PUE#1 LEFT R.P.
PUE#1 RIGHT TEST F.P.
INPUT FROM PUE#1 RIGHT R.P.
PUE#2 LEFT TEST F.P.
INPUT FROM PUE#2 LEFT R.P.
PUE#2 RIGHT TEST F.P.
INPUT FROM PUE#2 RIGHT R.P.
PUE#1 LEFT BUNCH TEST F.P.
PUE#1 LEFT BUNCH R.P.
PUE#1 RIGHT BUNCH TEST F.P.
PUE#1 RIGHT BUNCH R.P.
PUE#2 LEFT BUNCH TEST F.P.
PUE#2 LEFT BUNCH R.P.
PUE#2 RIGHT BUNCH TEST F.P.
PUE#2 RIGHT BUNCH R.P.
NOTES: UNLESS OTHERWISE SPECIFIED
1. ALL RESISTORS VALUE ARE IN OHMS, 1/8W, +/- 5%.
2. ALL CAPACITORS VALUE ARE IN MICRO FARADS, +/- 10%.
REF DESIGNATOR
ITEM NO.
DESCRIPTION
MATLDWG NO./BNL NO
QTY PROD
OUTSTANDING ECN NUMBERS
INTERPRET IN GENERAL ACCORDANCE WITH ASME Y14.5-M-1989
UNLESS OTHERWISE SPECIFIED
DIMENSIONS ARE IN INCHES
DECIMAL TOLERANCES
.X .XX
.XXX .XXX
ANGULAR TOLERANCE
NEXT ASSEMBLY
RHIC
BROOKHAVEN NATIONAL LABORATORY
UPTON, N.Y. 11973
TITLE: SCHEMATIC DIAGRAM RHIC RF BEAM CONTROL SYSTEM RADIUS DEMUX
DRAWN BY M.JACOBELUS
DESIGN APPROVAL D. MULLALY
CHECKED BY S. ELLERD
ENGINEER APPROVAL S. ELLERD
SIZE E
DRAWING NUMBER RD75018072
REV. A
SCALE: ------
WEIGHT: ------
SHEET 1 OF 1
A-3
RD75018074
DWG NO RD75018072
SHT 1 OF 1