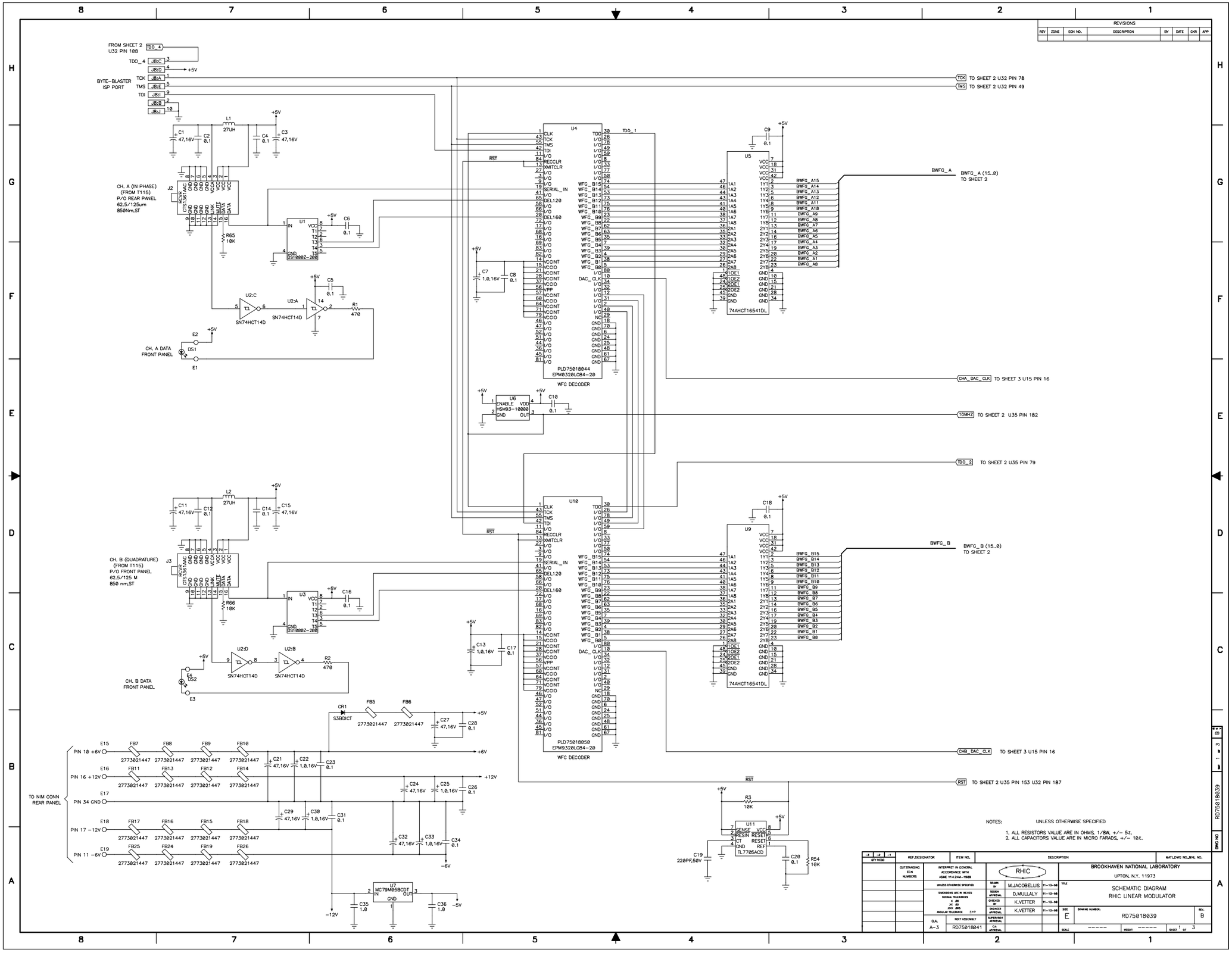
REVISIONS
REV ZONE ECN NO. DESCRIPTION BY DATE CHR APP
FROM SHEET 2 U32 PIN 108
TDO_4
BYTE-BLASTER ISP PORT
TCK
TMS
TDI
TO SHEET 2 U32 PIN 78
TO SHEET 2 U32 PIN 49
CH. A (IN PHASE) (FROM T115) P/O REAR PANEL 62.5/125um 850nm,ST
CH. A DATA FRONT PANEL
U4
PLD75018044
EPM9320LC84-20
WFG DECODER
U5
74AHCT16541DL
BWFG_A
BWFG_A (15..0) TO SHEET 2
CHA_DAC_CLK
TO SHEET 3 U15 PIN 16
10MHZ
TO SHEET 2 U35 PIN 182
TDO_2
TO SHEET 2 U35 PIN 79
CH. B (QUADRATURE) (FROM T115) P/O FRONT PANEL 62.5/125 M 850 nm,ST
CH. B DATA FRONT PANEL
U10
PLD75018050
EPM9320LC84-20
WFG DECODER
U9
74AHCT16541DL
BWFG_B
BWFG_B (15..0) TO SHEET 2
CHB_DAC_CLK
TO SHEET 3 U15 PIN 16
RST
TO SHEET 2 U35 PIN 153 U32 PIN 187
TO NIM CONN REAR PANEL
PIN 18 +6V
PIN 16 +12V
PIN 34 GND
PIN 17 -12V
PIN 11 -6V
NOTES: UNLESS OTHERWISE SPECIFIED
1. ALL RESISTORS VALUE ARE IN OHMS, 1/8W, +/- 5%.
2. ALL CAPACITORS VALUE ARE IN MICRO FARADS, +/- 10%.
BROOKHAVEN NATIONAL LABORATORY
UPTON, N.Y. 11973
RHIC
SCHEMATIC DIAGRAM
RHIC LINEAR MODULATOR
DRAWN BY M.JACOBELLIS 11-13-98
DESIGN APPROVAL D.MULLALY 11-13-98
CHECKED BY K.VETTER 11-13-98
ENGINEER APPROVAL K.VETTER 11-13-98
SIZE E
DRAWING NUMBER RD75018039
REV. B
SCALE ------ WEIGHT ------ SHEET 1 OF 3
DWG NO RD75018039

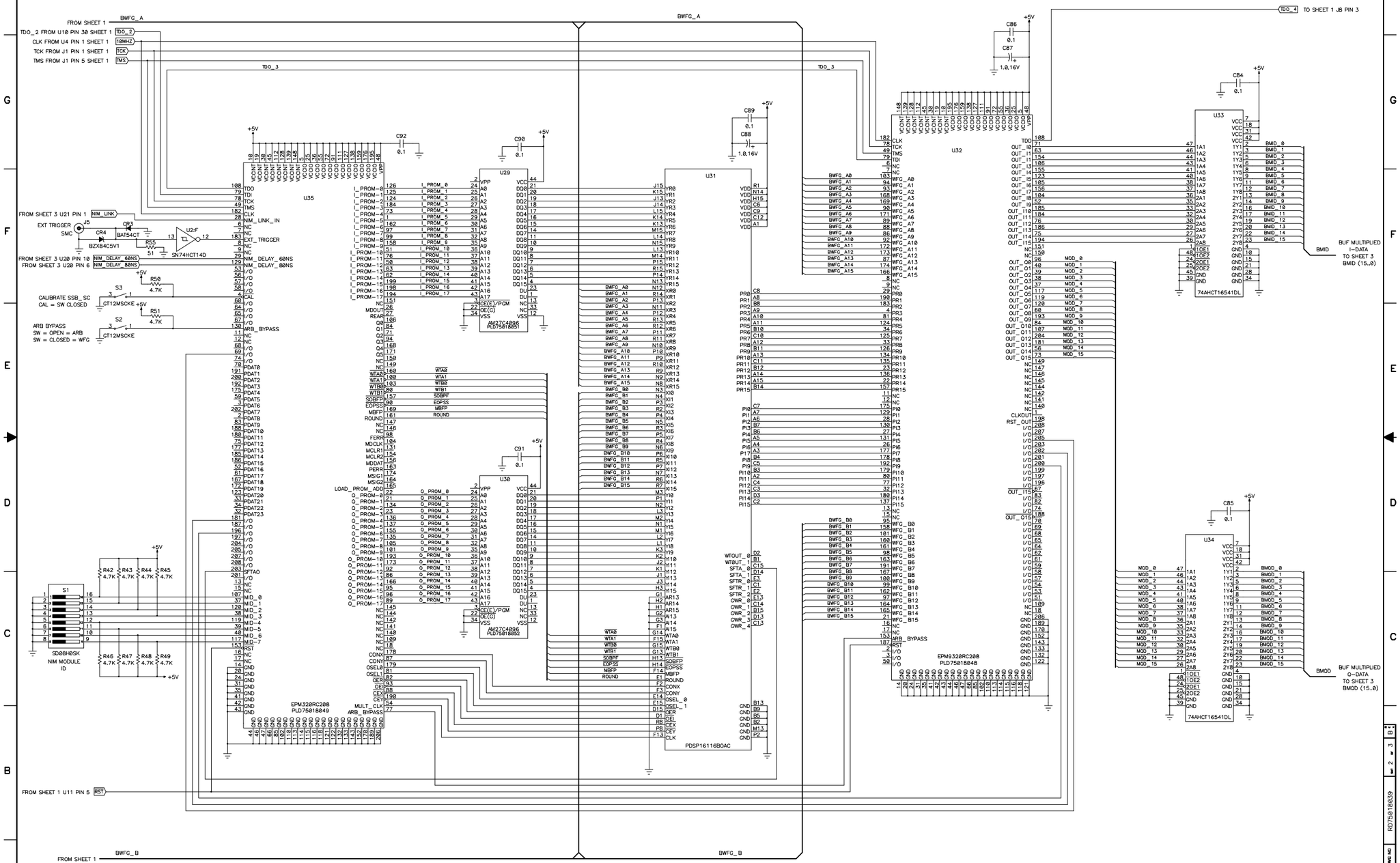
FROM SHEET 1
TDO_2 FROM U18 PIN 30 SHEET 1
CLK FROM U4 PIN 1 SHEET 1
TCK FROM J1 PIN 1 SHEET 1
TMS FROM J1 PIN 5 SHEET 1
TO SHEET 1 J8 PIN 3
FROM SHEET 3 U21 PIN 1
EXT TRIGGER
SMC
FROM SHEET 3 U20 PIN 18
FROM SHEET 3 U20 PIN 6
CALIBRATE SSB_SC
CAL = SW CLOSED
ARB BYPASS
SW = OPEN = ARB
SW = CLOSED = WFG
SD08H0SK
NIM MODULE
ID
FROM SHEET 1 U11 PIN 5
FROM SHEET 1
BUF MULTIPLIED
I-DATA
TO SHEET 3
BMID (15..0)
BUF MULTIPLIED
Q-DATA
TO SHEET 3
BMOD (15..0)
U35
U29
U30
U31
U32
U33
U34
AM27C4096
PLD75818051
PLD75818052
EPM3128RC208
PLD75818049
EPM9320RC208
PLD75818048
PDSP16116B0AC
74AHCT16541DL
SN74HCT14D
BROOKHAVEN NATIONAL LABORATORY
UPTON, N.Y. 11973
RD75018039
A-3
SHEET 2 OF 3

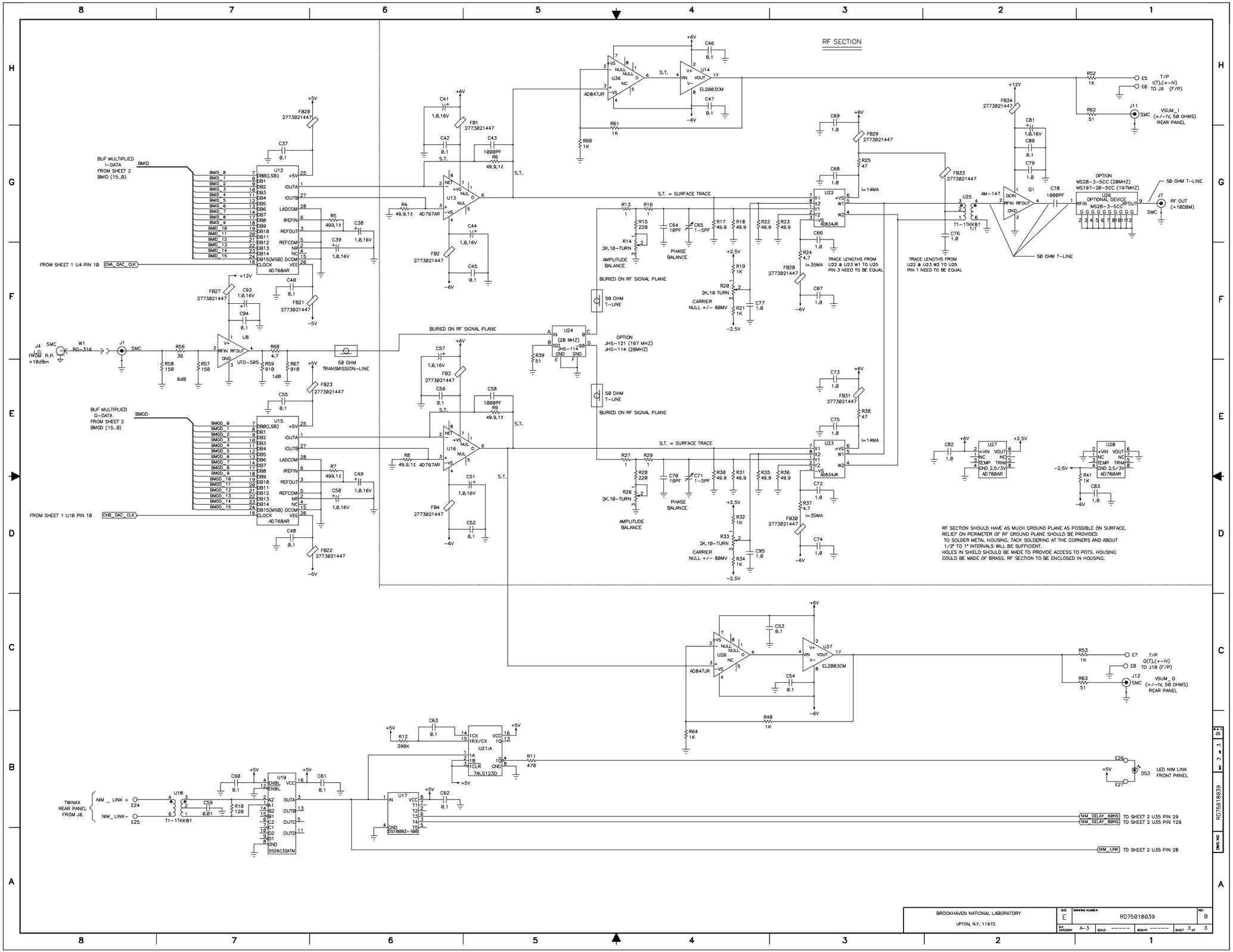
RF SECTION
BUF MULTIPLIED I-DATA FROM SHEET 2 BMID (15..0)
BUF MULTIPLIED Q-DATA FROM SHEET 2 BMQD (15..0)
FROM SHEET 1 U4 PIN 10
FROM SHEET 1 U10 PIN 10
J4 SMC LO FROM R.P. +10dBm
W1 RG-316
50 OHM TRANSMISSION-LINE
50 OHM T-LINE
BURIED ON RF SIGNAL PLANE
S.T. = SURFACE TRACE
PHASE BALANCE
AMPLITUDE BALANCE
CARRIER NULL +/- 80MV
TRACE LENGTHS FROM U22 & U23 W1 TO U25 PIN 3 NEED TO BE EQUAL
TRACE LENGTHS FROM U22 & U23 W2 TO U25 PIN 1 NEED TO BE EQUAL
OPTION JHS-121 (197 MHZ) JHS-114 (28MHZ)
OPTION MS28-3-5CC (28MHZ) MS197-20-5CC (197MHZ)
T/P I(T),(+-IV) TO J9 (F/P)
VSUM_I (+/-IV, 50 OHMS) REAR PANEL
RF OUT (+10DBM)
T/P Q(T),(+-IV) TO J10 (F/P)
VSUM_Q (+/-IV, 50 OHMS) REAR PANEL
TWINAX REAR PANEL FROM J6
NIM_LINK+
NIM_LINK-
LED NIM LINK FRONT PANEL
NIM_DELAY_60NS TO SHEET 2 U35 PIN 29
NIM_DELAY_80NS TO SHEET 2 U35 PIN 129
NIM_LINK TO SHEET 2 U35 PIN 28
RF SECTION SHOULD HAVE AS MUCH GROUND PLANE AS POSSIBLE ON SURFACE. RELIEF ON PERIMETER OF RF GROUND PLANE SHOULD BE PROVIDED TO SOLDER METAL HOUSING. TACK SOLDERING AT THE CORNERS AND ABOUT 1/2" TO 1" INTERVALS WILL BE SUFFICIENT. HOLES IN SHIELD SHOULD BE MADE TO PROVIDE ACCESS TO POTS. HOUSING COULD BE MADE OF BRASS. RF SECTION TO BE ENCLOSED IN HOUSING.
BROOKHAVEN NATIONAL LABORATORY
UPTON, N.Y. 11973
RD75018039
B
A-3
3 OF 3