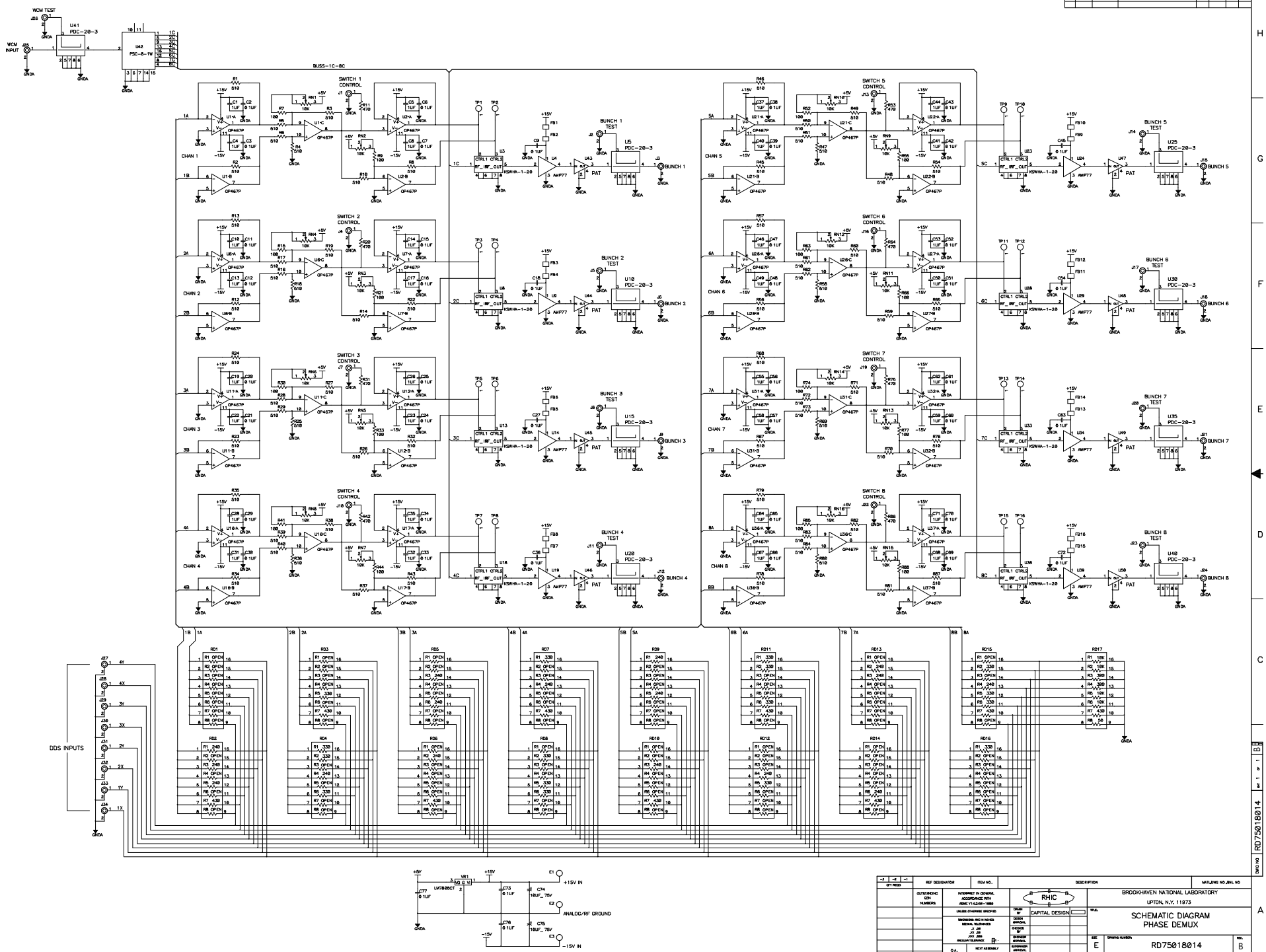
REVISIONS
REV ZONE ECN NO DESCRIPTION BY DATE CK'D APP
WCM TEST
WCM INPUT
U41 PDC-28-3
U42 PSC-8-1W
BUSS-1C-8C
SWITCH 1 CONTROL
SWITCH 2 CONTROL
SWITCH 3 CONTROL
SWITCH 4 CONTROL
SWITCH 5 CONTROL
SWITCH 6 CONTROL
SWITCH 7 CONTROL
SWITCH 8 CONTROL
BUNCH 1 TEST
BUNCH 2 TEST
BUNCH 3 TEST
BUNCH 4 TEST
BUNCH 5 TEST
BUNCH 6 TEST
BUNCH 7 TEST
BUNCH 8 TEST
CHAN 1
CHAN 2
CHAN 3
CHAN 4
CHAN 5
CHAN 6
CHAN 7
CHAN 8
DDS INPUTS
LM7805CT
+15V IN
ANALOG/RF GROUND
-15V IN
RHIC
CAPITAL DESIGN
BROOKHAVEN NATIONAL LABORATORY
UPTON, N.Y. 11973
SCHEMATIC DIAGRAM
PHASE DEMUX
RD75018014
B
A3
RD75018016
SHEET 1 OF 1