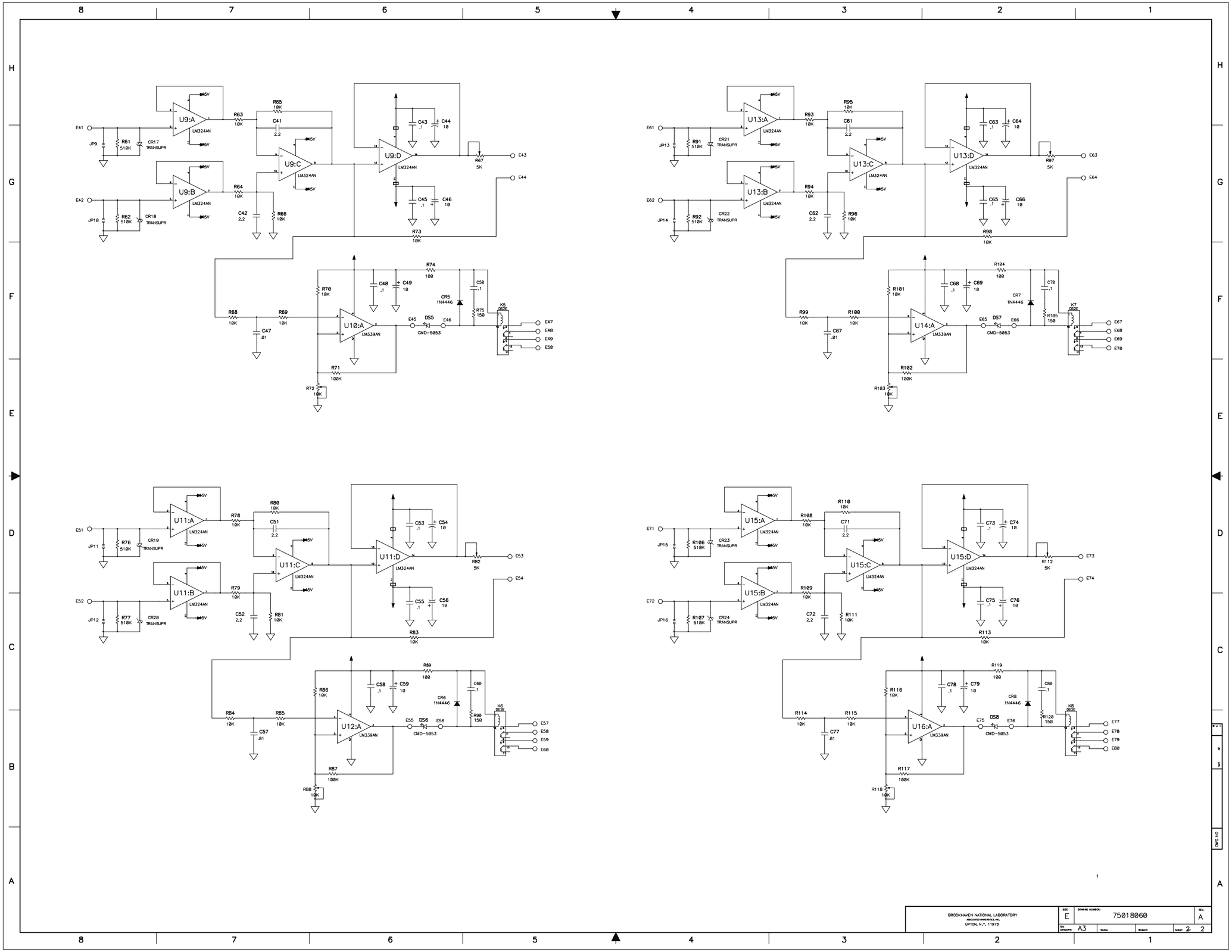

BROOKHAVEN NATIONAL LABORATORY
ASSOCIATED UNIVERSITIES, INC.
UPTON, N.Y. 11973

SIZE	DRAWING NUMBER:	REV.
E	75018060	A
S.A. DESIGN: A3	SCALE	WEIGHT:	SHEET 2 OF 2