REVISIONS							
REV	ZONE	ECN NO.	DESCRIPTION	BY	DATE	CKR	APP

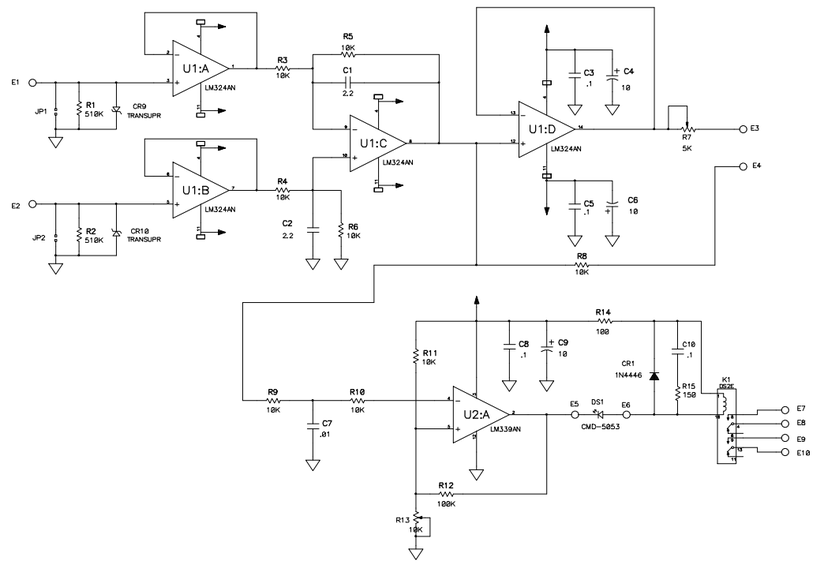

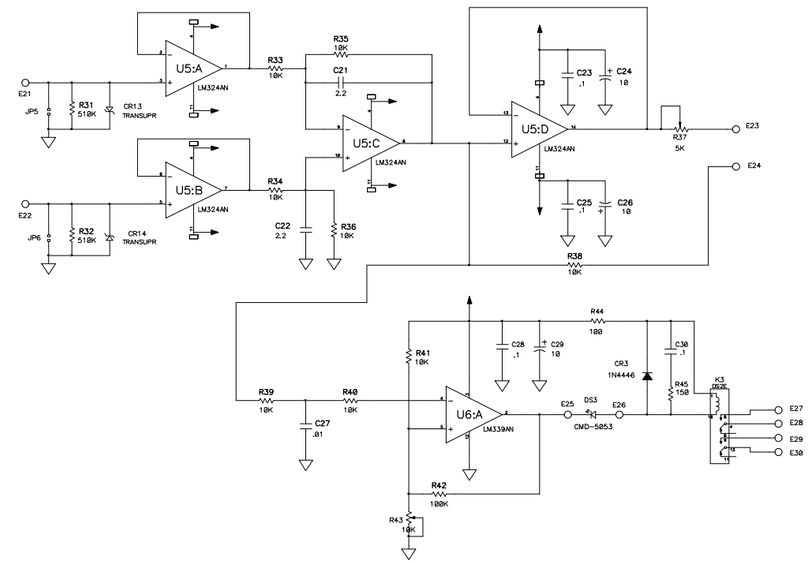

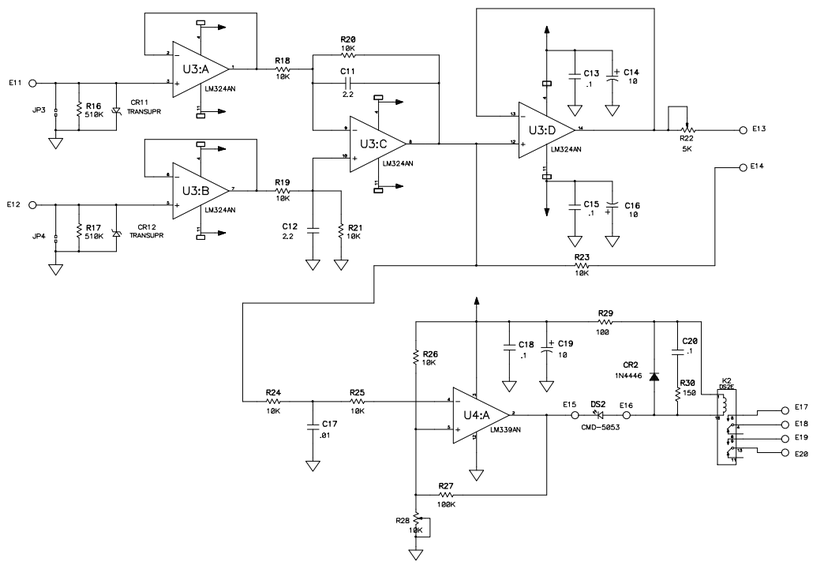

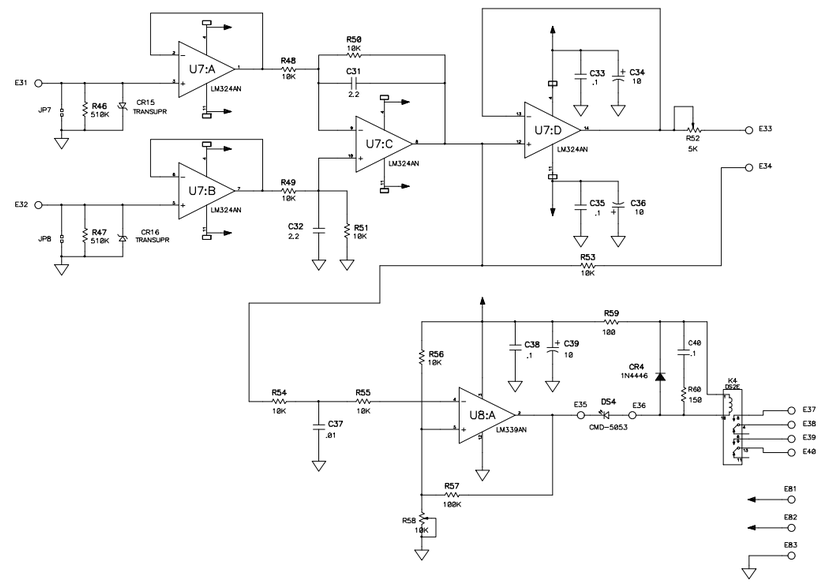

NOTES: UNLESS OTHERWISE SPECIFIED

1. ALL RESISTORS ARE IN OHMS,1/4W,+/-2%.
2. ALL CAPACITOR VALUES ARE IN MICROFARADS,10%.
3. ALL 100 OHMS RESISTORS,WHICH ARE IN SERIES WITH THE COIL OF RELAYS (K1-K8)SHOULD BE ELIMINATED(SHORTED).

-3	-2	-1	REF.DESIGNATOR	ITEM NO.	DESCRIPTION	MATL.DWG NO.,BIN. NO.
QTY REQD						

OUTSTANDING ECN NUMBERS

INTERPRET IN GENERAL ACCORDANCE WITH ASME Y14.24M-1989

UNLESS OTHERWISE SPECIFIED

DIMENSIONS ARE IN INCHES
DECIMAL TOLERANCES
X ±.25
XX ±.12
XXX ±.015
ANGULAR TOLERANCE ±1°

NEXT ASSEMBLY: 75018062

G.A. A3

RHIC

DRAWN BY	CAPITAL	2-26-98
DESIGN APPROVAL	D.MULLALY	2-26-98
CHECKED BY	S.KWATKOWSKI	2-26-98
ENGINEER APPROVAL	S.KWATKOWSKI	2-26-98
SUPERVISOR APPROVAL	J.ROSE	8-23-98
Q.A. APPROVAL	PASSARELLO	8-23-98

BROOKHAVEN NATIONAL LABORATORY
ASSOCIATED UNIVERSITIES, INC
UPTON, N.Y. 11973

TITLE: SCHEMATIC DIAGRAM
NIM INTERFACE BOARD # 2

SIZE: E
DRAWING NUMBER: 75018060
REV: A
SCALE
WEIGHT
SHEET 1 OF 2

DWG NO