RHIC AC-dipole Design Considerations

Peter Oddo

November 8, 2007

Ferrite or Air Core?

- Bellow 100kHz losses are negligible for CMD5005 or 8C11 ferrite material
  - Simulated loss of 14W at 39kHz
- Losses are dominated by copper losses
- Ferrite shortens effective path length (l_e) reducing current and power dissipation ($I_m \sim Bl_e/(\mu_0 N)$)
  - Air core l_e=0.263m
  - Ferrite core l_e=0.140m
  - Air core needs 1.9x more current or 3.6x more power

Cos? or Window Frame?

- Cos? winding not needed for ferrite magnet
- Cos? actually increases path length
  - Cos? l_e=0.14m
  - Window Frame l_e=Aperture-height=0.12m
- Uniform winding is simpler to construct

Litz-wire or Bus-bar?

- A single turn bus-bar magnet could work
  - Estimated 493W at 39kHz
    - Parallel impedance (R_p) of 88.3O is > 50O
  - Losses of interconnects may **double** actual power
  - Capacitors would have to be very close
- Litz-wire will reduce losses
  - Based on current magnet, might use 60% less power than bus-bar magnet
  - The need for multiple turns will increase inductance and operating voltage

Design Goals

- =1000W of power
- Resonant or parallel impedance (R_p) > 50O
  - R_p=(? L)^2/R_s=Q^2R_s
    - R_s is equivalent series resistance
- Magnet voltage (V_m) = Drive voltage (V_p)
  - V_p=316.2V_{pk} for 1000W into 50O
  - V_m=? LI_m=? NBAe ? N = V_p/(? BA_e)
- Compatible with MOSFETs
  - V_m- V_p = 480V (or 720V)

Modified Topology

- C1 Tunes both frequency and R_p
- For a constant R_s, R_p decreases with increasing frequency

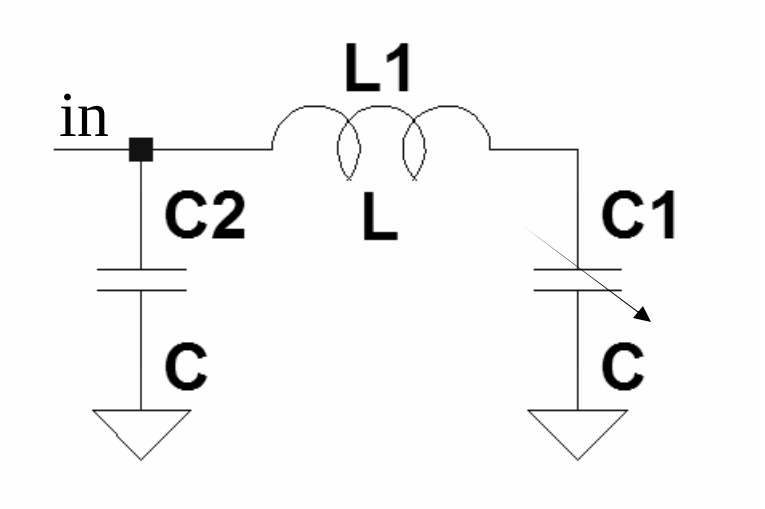

Observation

- Existing RHIC magnet
  - 232W @ 37kHz, 429W @ 64kHz
  - A_e=0.059m^2, l_e=0.139m
- Proposed magnet
  - A_e=0.12m^2, l_e=0.12m
  - Although the area doubles, due to the ferrite the path length does not
    - The expected power dissipation should be similar to the existing magnet

Conclusion

- A 2-Turn Litz-wire window-frame magnet would work
  - 2” rectangular Litz-wire is available, but might be difficult to use
  - Need a way to predict R_s variations with parameters