LBNL Plans for DAQ

A. Ratti
for the LBNL design team

April 6-8, 2005

Overall Approach

- Build mezzanine cards for the CERN DABIV system
- Integrate shaper onto the mezzanine cards
  - Adjust PZ + offset digitally on board
- Multiple acquisition modes
  - 40 MS/s with pulse stretcher for extended acquisition time
  - 120+MS/s w/o stretcher for pulse shape and diagnostics
- Must fit within the DABIV environment
  - 1-2 channel per mezzanine card
    - 12 bit communication --> 8-11 bit digitizers
  - Available onboard RAM limits DAQ time, but ok for 1s

Data Requirements

- The requirements for data acquisition are the following (per Enrico Bravin, October 2004):
  - Typical Integration time: 1s
    - On-board storage
    - Longer integration in software
  - Luminosity
    - Integral (sum of all the information from the 3,000 bunches)
    - Average (over one second)
    - Real-time information
    - Individual Bunch Luminosity
  - X and Y information (crossing angle)
  - Post-mortem Data (last 1,000 points of the integral luminosity)

Implementation

- Data acquisition modes (from CERN's requirements):
  - Orbit: Integrated data
  - Capture: Snapshot of a few bunches
  - Post mortem: last 1,000 data points for analysis after beam loss
- In addition:
  - Device/system diagnostics - hi res, single channel
- Support required modes:
  - Combination of firmware and software
  - Defining firmware plan
- Application software by AP and CERN
  - Integration in the control system

Data Acquisition Board

CERN's DAQ for all beam instrumentation applications is being built around the DAB64 VME board.

Special VME modules provide all the timing necessary to synchronize the data acquisition

On each DAB64 board, there are mezzanine board (daughter board) locations that can be used to customize the board to the specific need of the instrument.

Data Acquisition Board Features

(J.L. Gonzales, CERN)

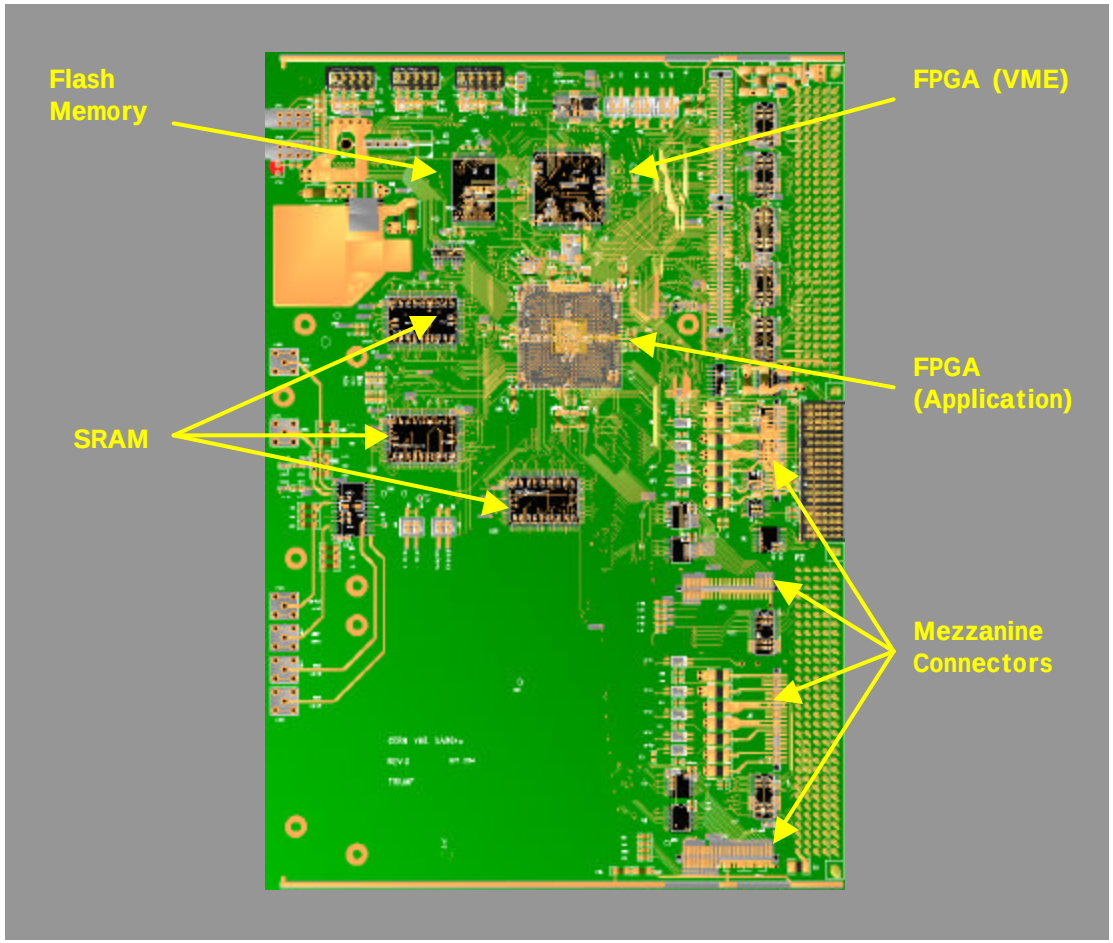

DAB Block Diagram

(J.L. Gonzales, CERN)

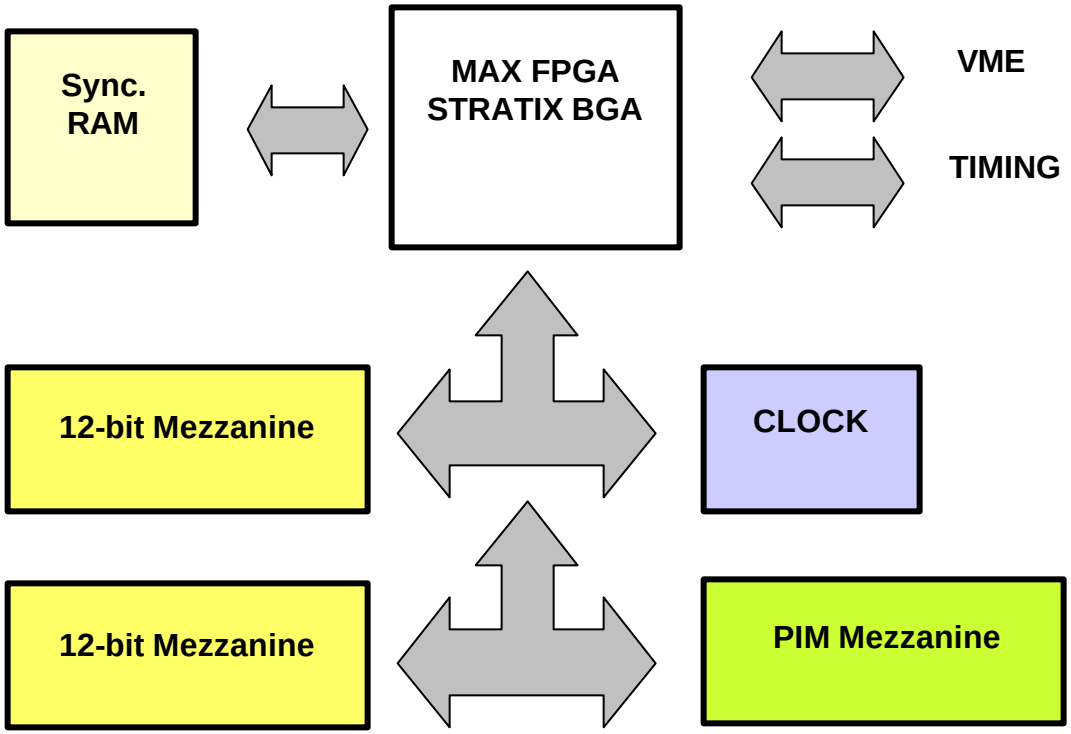

Mezzanine Boards
(J.L. Gonzales, CERN)

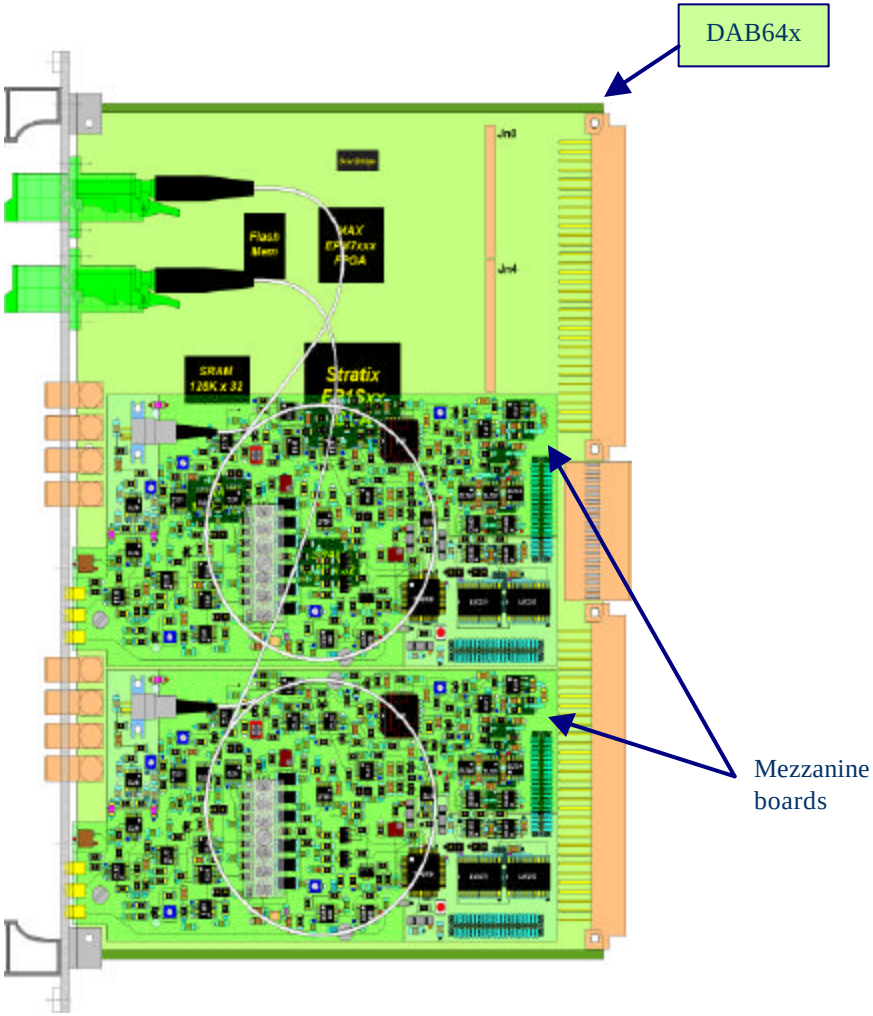

Diagnosis and Control

Diagnosis:

- Calibration (Front End)
- Fault detection
  - Power consumption monitoring for Electronics and HV
  - Temperature
- Shaper profile measurement

Control:

- Power ON/OFF (Regulators)
- Pole-Zero Adjustment (digital potentiometer)
- Gain and Offset Adjustment (digital potentiometer and DAC)
- Self trigger or synchronous trigger for ADC

Block diagram

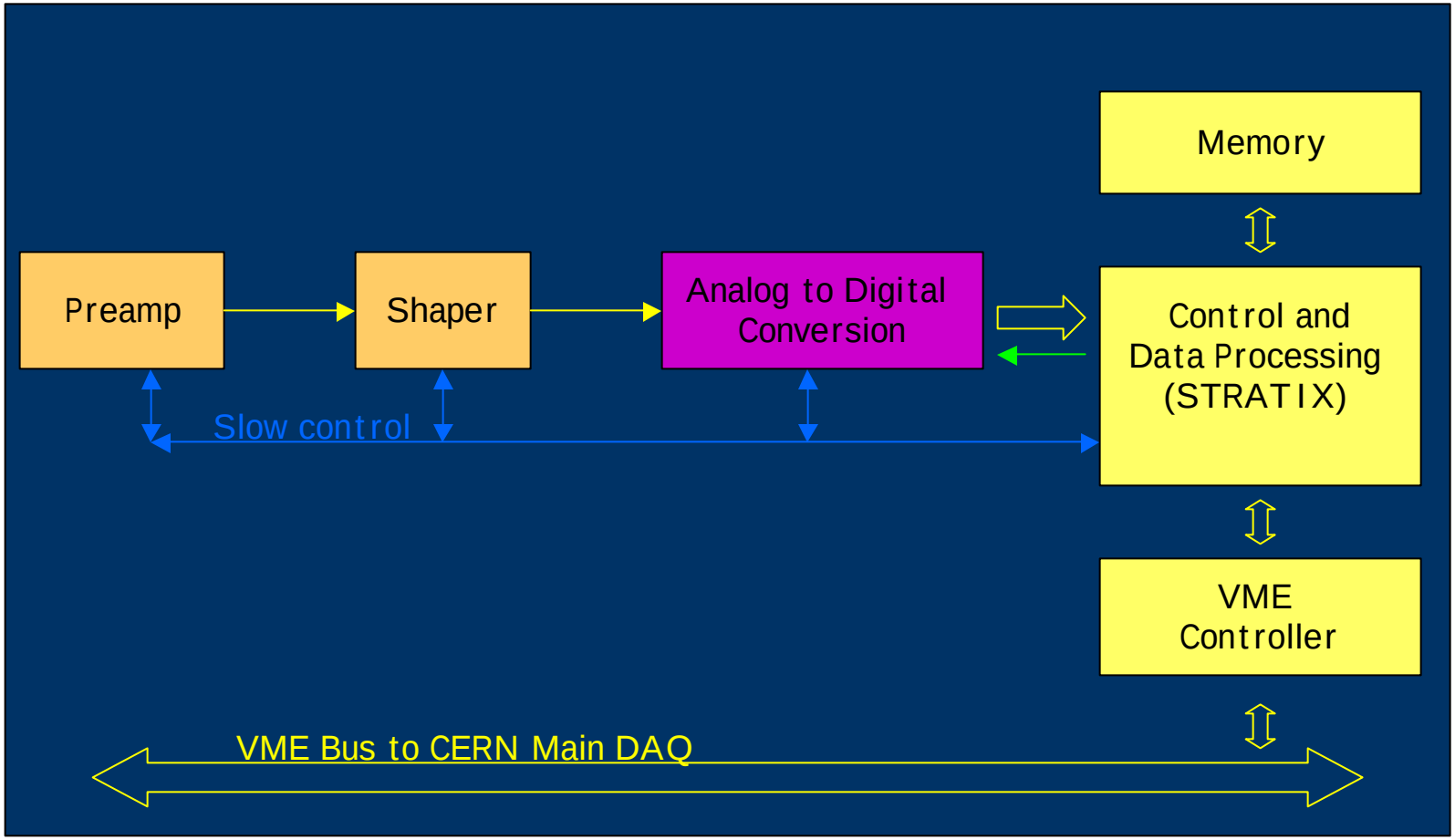

Data Acquisition Board: Analog to Digital Conversion

- The deconvolution algorithm requires one point per pulse in order to reconstruct the waveform.
- The only requirement is that the jitter of the sampling clock be kept minimal.
- A simple way to achieve that is to use a peak-detector stretcher to stretch the signal at the peak and then to sample the peak value on the plateau.

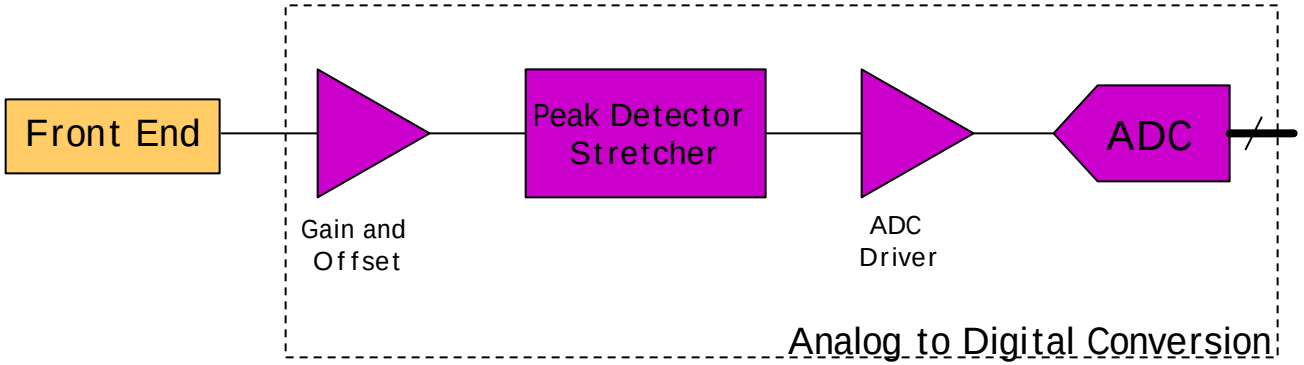

Peak Detector/Stretcher

Proven design to be adapted to the needs of the LUMI application:

- Original design for 40MHz CCD readout
- Adapted version (x8 channels) with self or synchronous peak detection

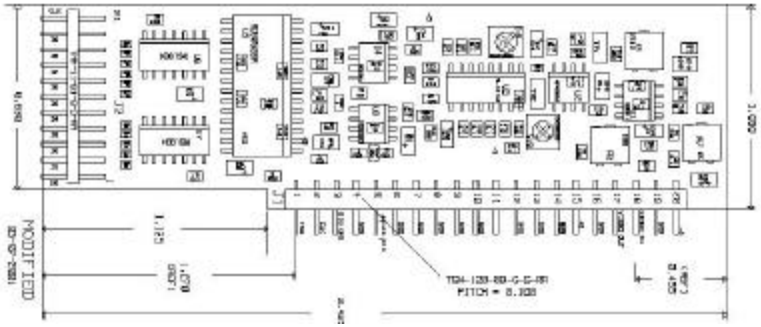

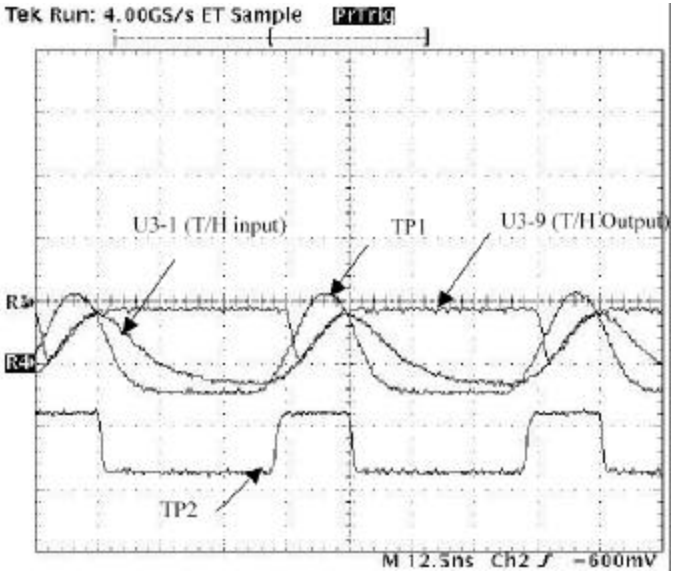

TnHx8 Board

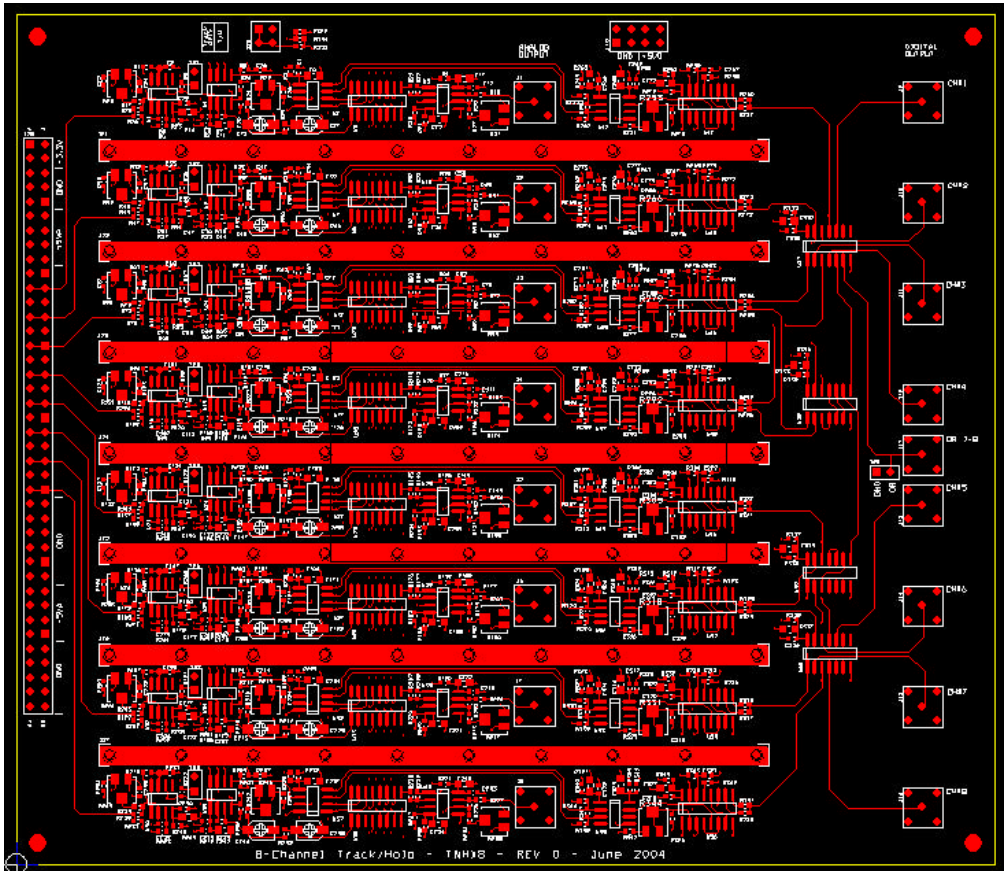

Data Processing and Data Storage

ALTERA Stratix:

- Dedicated Firmware to calculate
  - Bunch-by-bunch luminosity
  - Average luminosity
  - X,Y information

Data Storage in on-board RAM

- Real Time and individual information stored in Dual-Port SRAMs
- Post mortem Stored in continuous FIFO

LUMI Data Acquisition
Shaper and ADC Mezzanine Board
Block Diagram

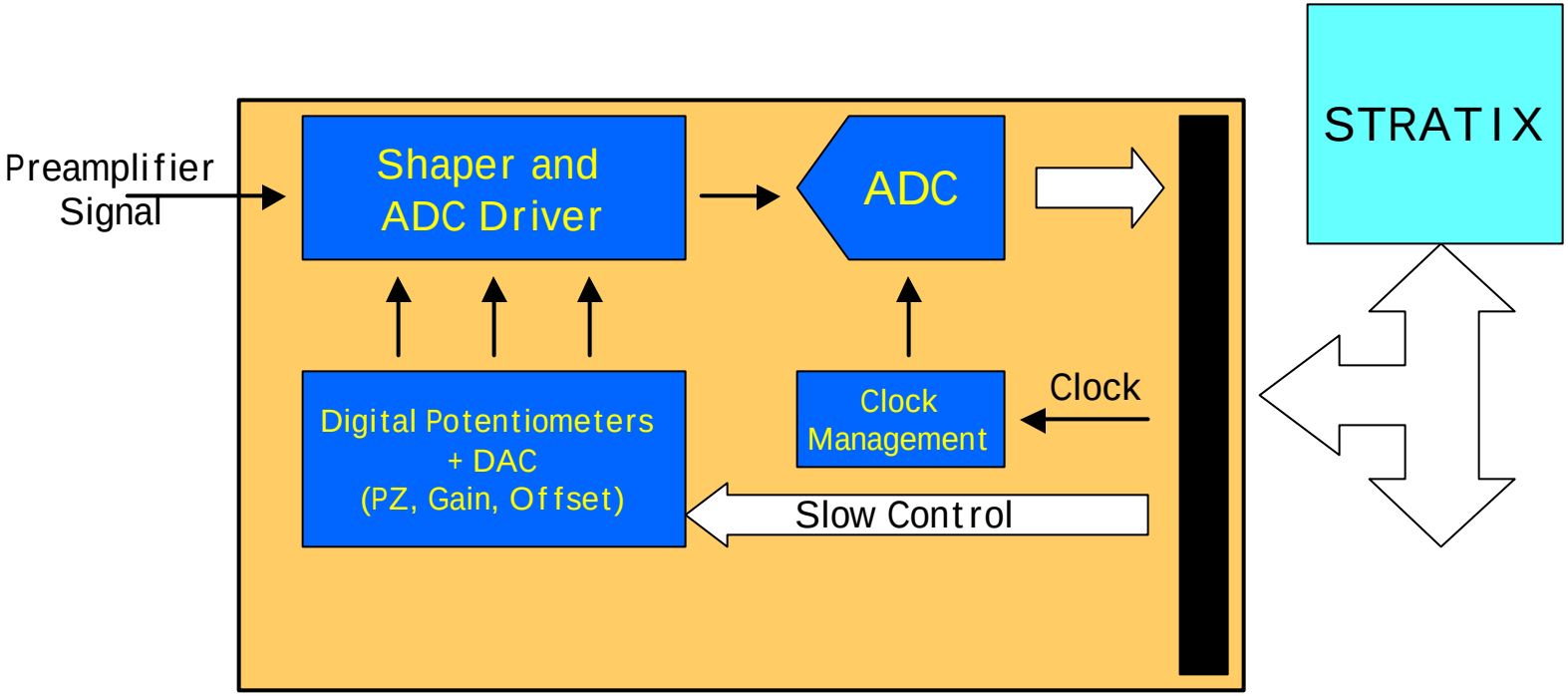

LUMI Data Acquisition Tunnel Block Diagram

Preamplifier requires accurate bias and references to operate (6).

Several regulation schemes are available:

- Local regulation:
  - Issue: increased number of parts and their radiation tolerance (Shielding ?)
- Remote sensing (current or voltage) requires many cables.
- Power regulation to a level anticipating the voltage drop along the line.

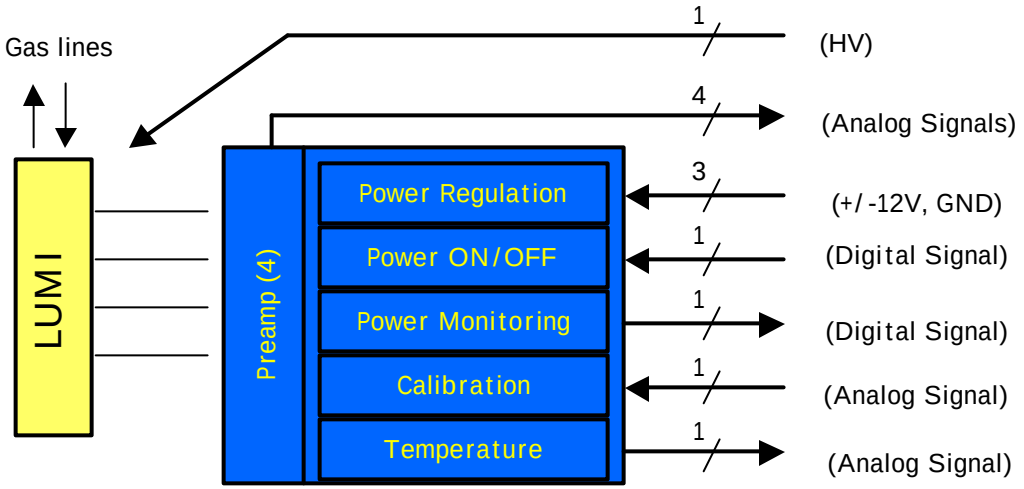

To be continued….