Schottky
Status and Plans For LHC

Al Della Penna

- What can Schottky Measure
- Schottky System Architecture
- RHIC 2004 –2005 data
- Problems that were discovered
- Plan for next Run

- Synchrotron frequency – cavity phasing,…
- Momentum spread
- Incoherent tune
- Linear Chromaticity
- Non-linear chromaticity – lineshape
- Non-linear tune spread – two ways
  - Betatron sum width relative to revolution line
  - Central line width
- Transverse emittance
- Coupling,…..

HFS SPECIFICATIONS

Transverse Horz. Freq. 2.067Ghz cavity Q =4700

NCO 8.073632Mhz – 8.074482Mhz delta 850khz

BW = 400khz TM210

Transverse Vert. Freq. 2.071Ghz TM120

NCO 8.090136Mhz – 8.090051 delta 915khz

Long. Freq. 2.742Ghz
NCO 10.710224Mhz – 10.711434Mhz delta 1.21khz

IR bump PLL (left) HFS (right)

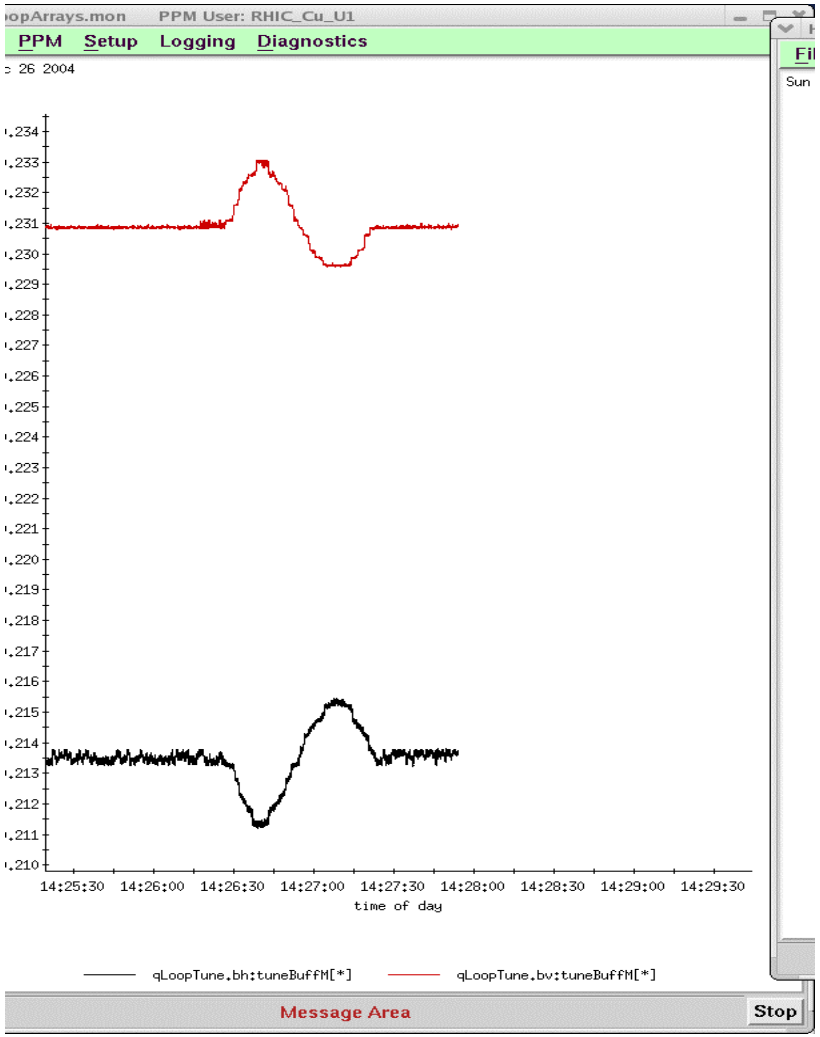

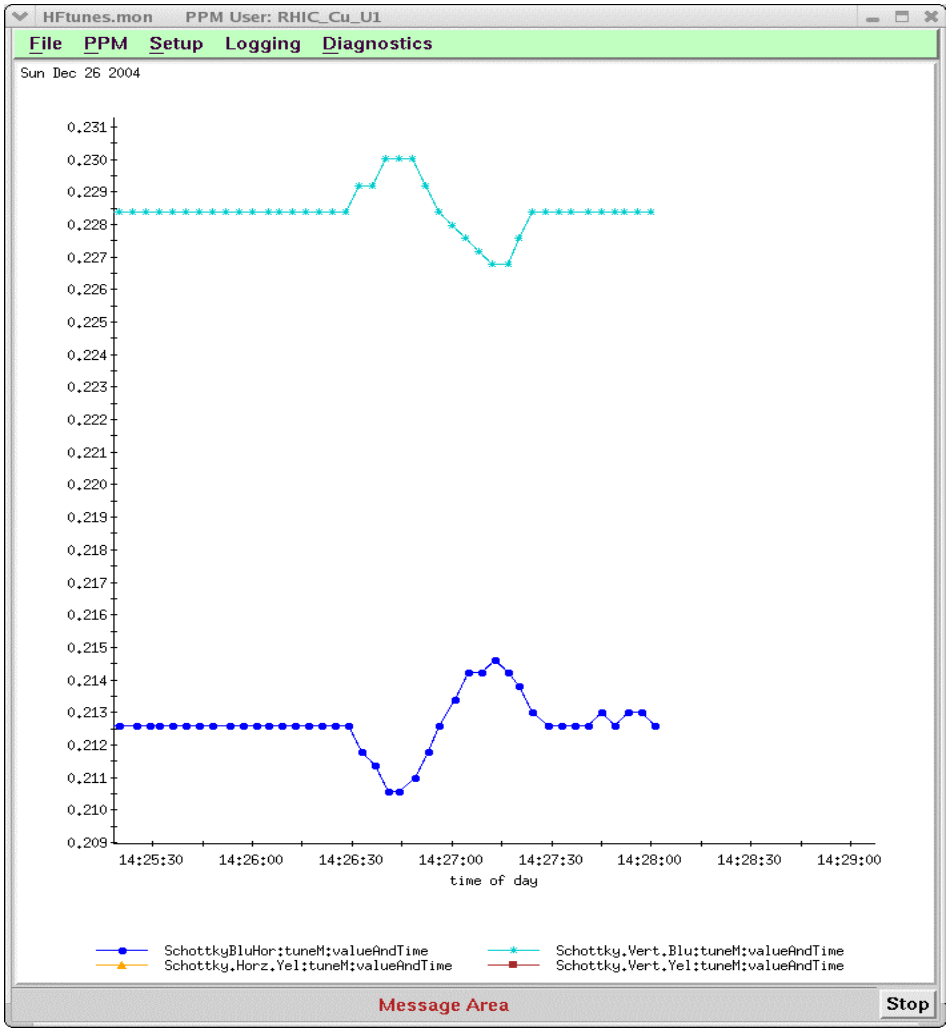

HFS chrom following IR corrections

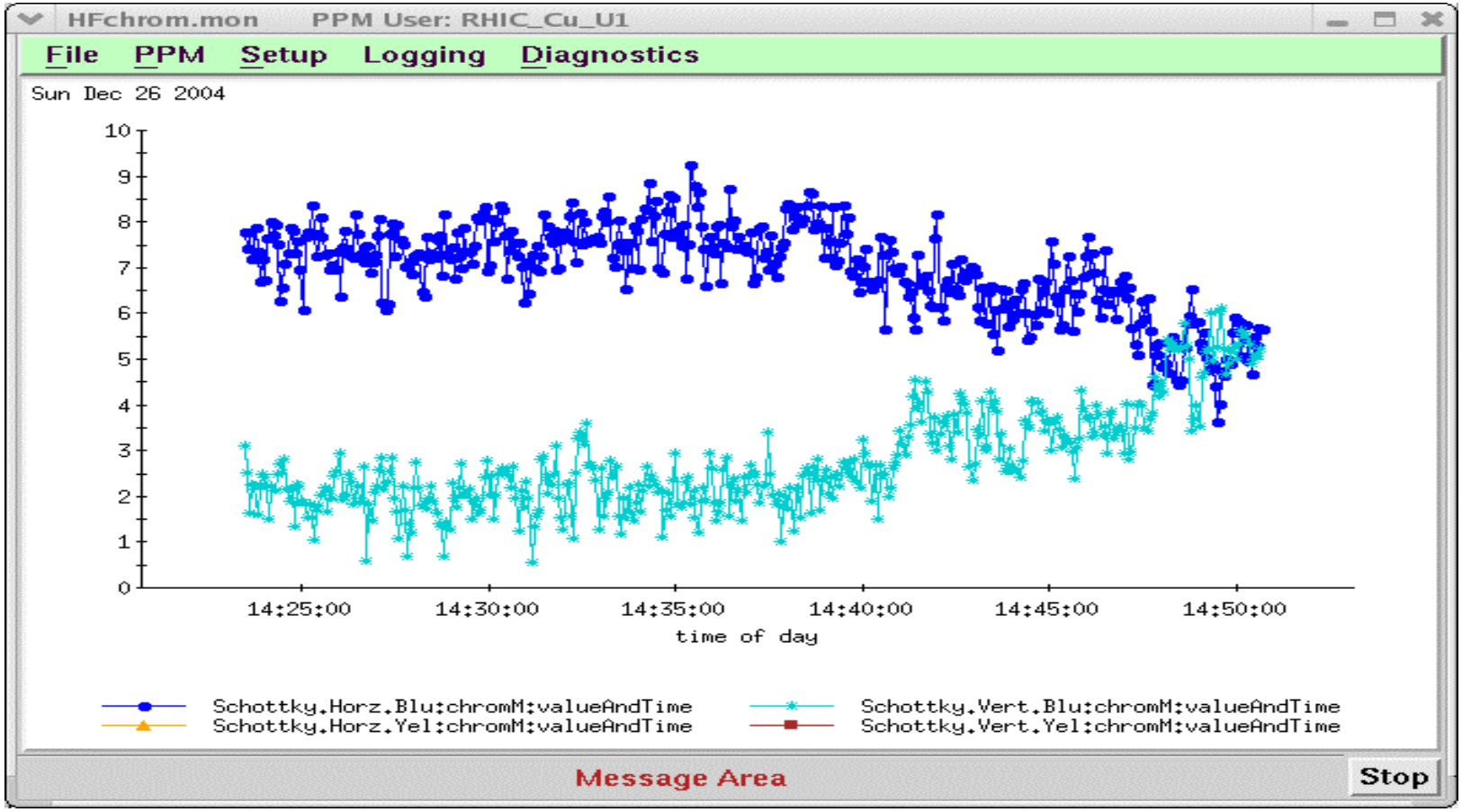

HFS spectrum

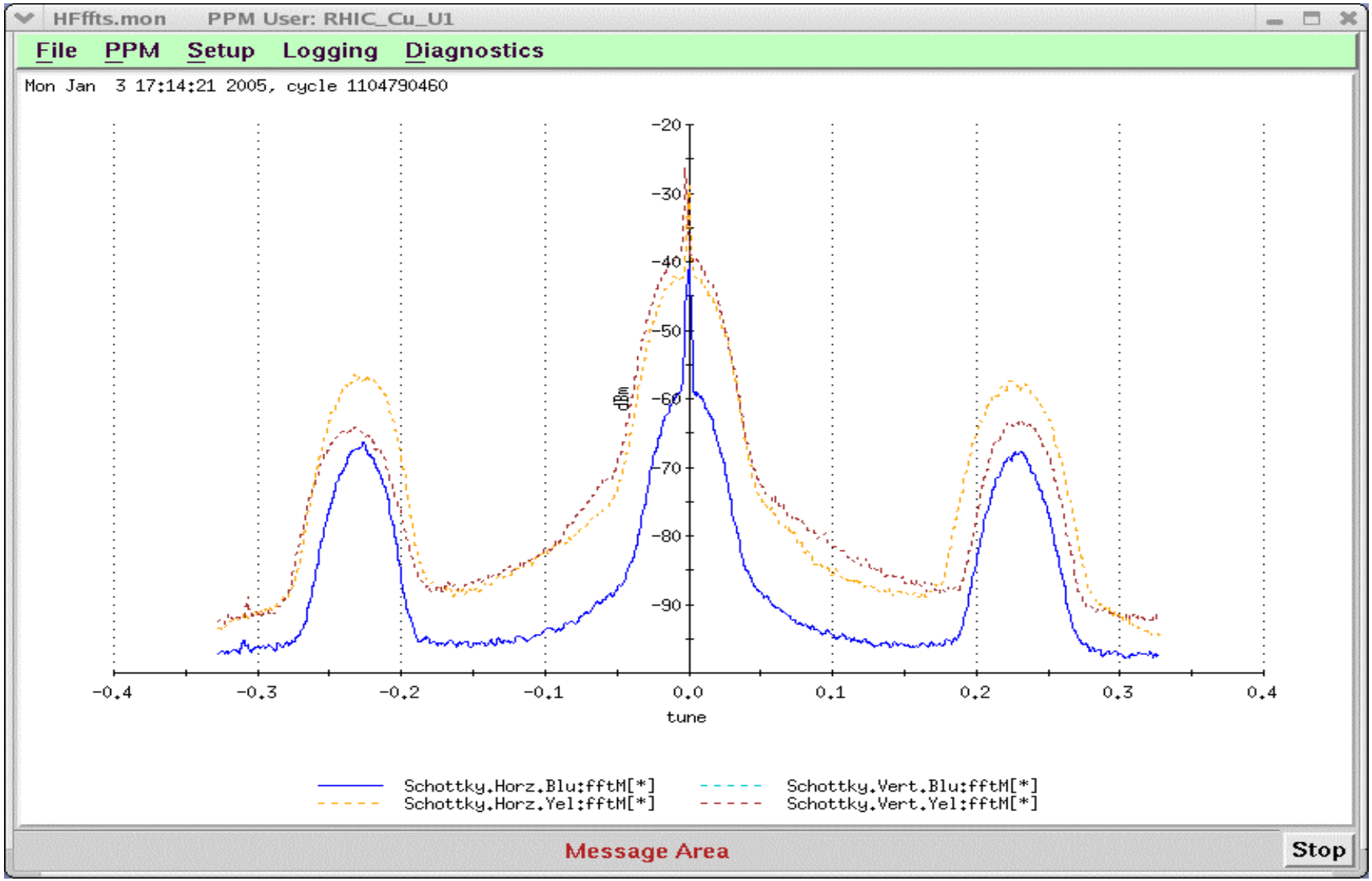

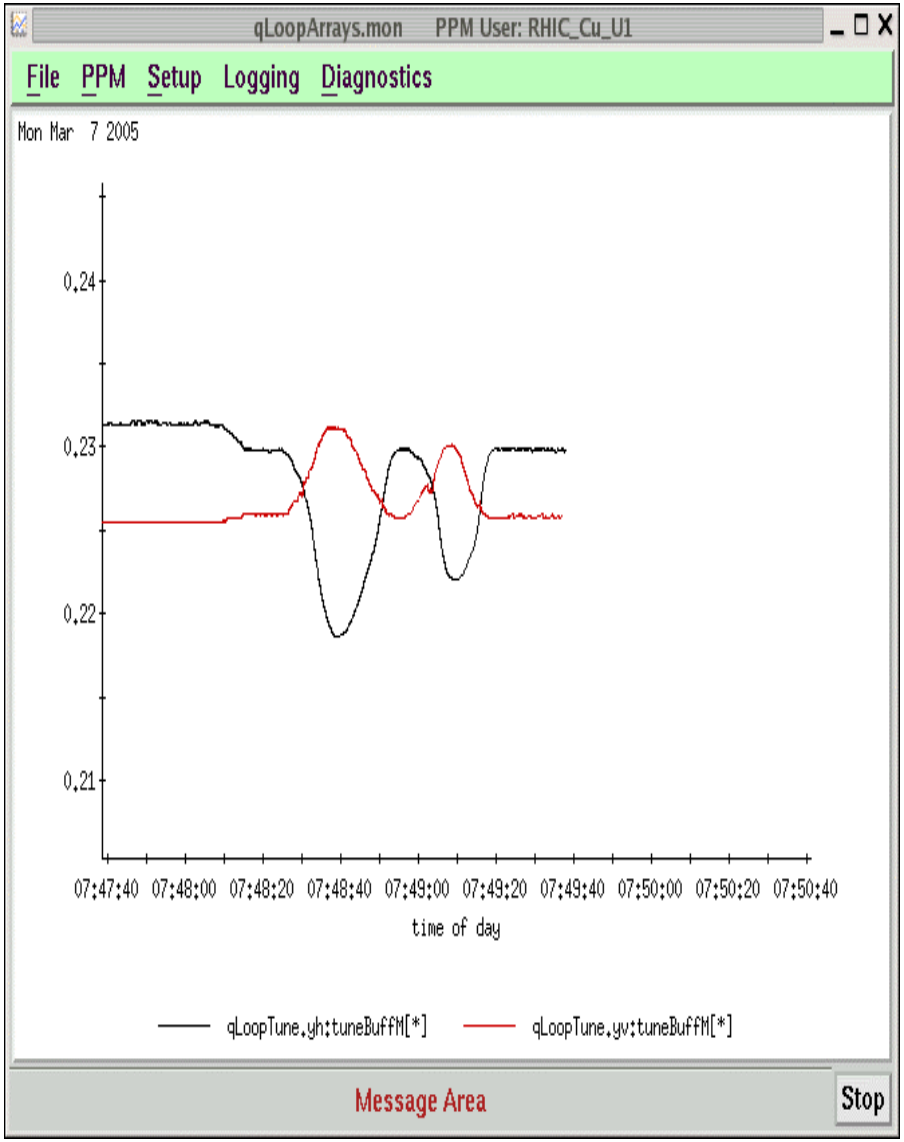
qLoopArrays.mon PPM User: RHIC_Cu_U1
File PPM Setup Logging Diagnostics
Mon Mar 7 2005
0.24
0.23
0.22
0.21
07:47:40 07:48:00 07:48:20 07:48:40 07:49:00 07:49:20 07:49:40 07:50:00 07:50:20 07:50:40
time of day
qLoopTune.yh:tuneBuffM[*]
qLoopTune.yv:tuneBuffM[*]
Message Area
Stop

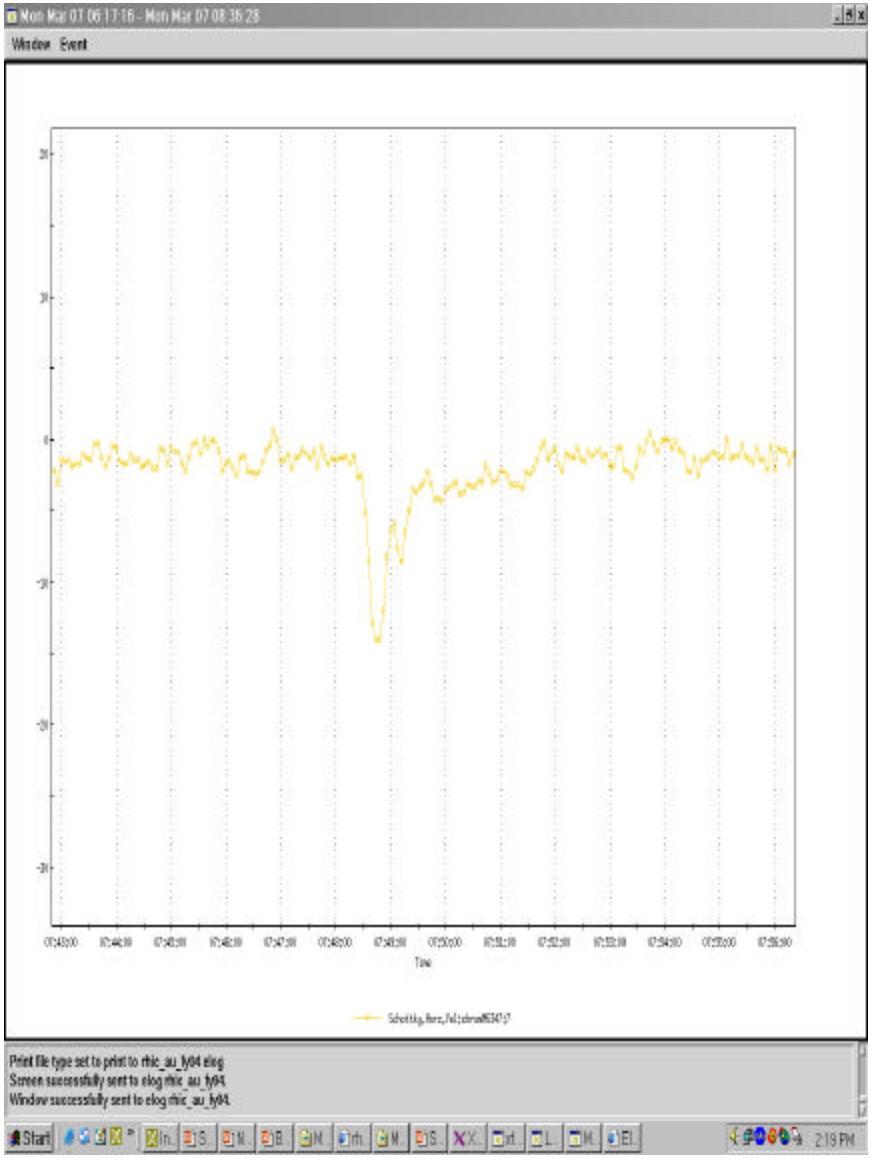
Window Event
Time
Print file type set to print to rhic_au_fy04.elog
Screen successfully sent to elog rhic_au_fy04.
Window successfully sent to elog rhic_au_fy04.
Start
2:19 PM

HFS tunes during decoupling with 200Mhz ON

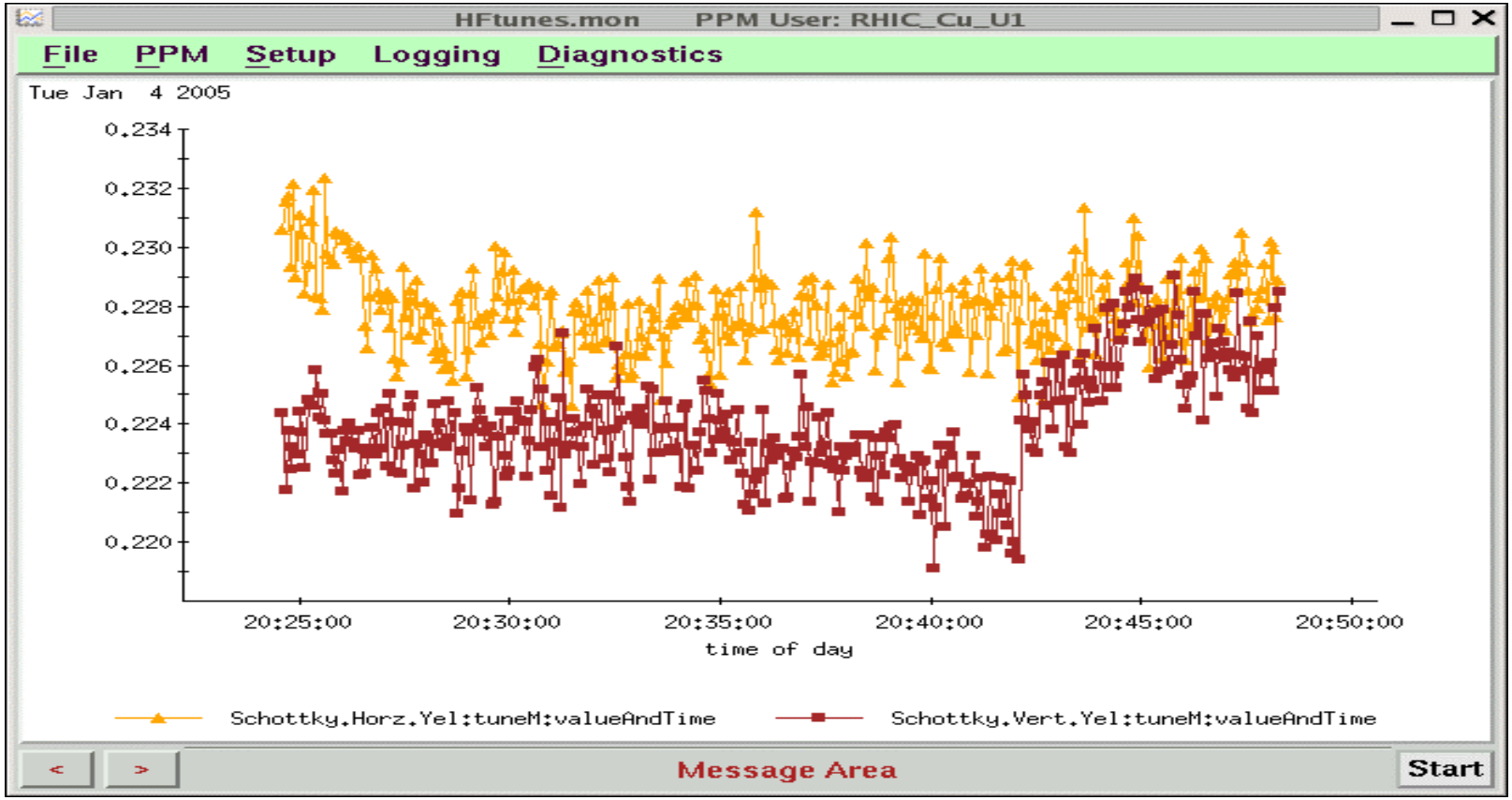

HFS after re-bucketing must re-center

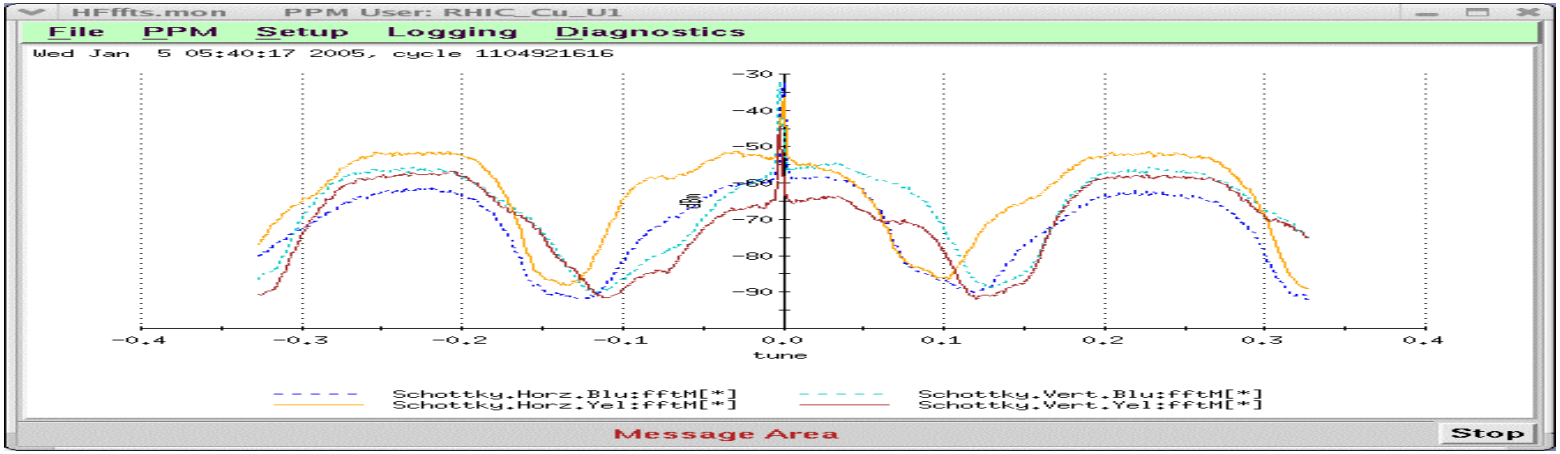

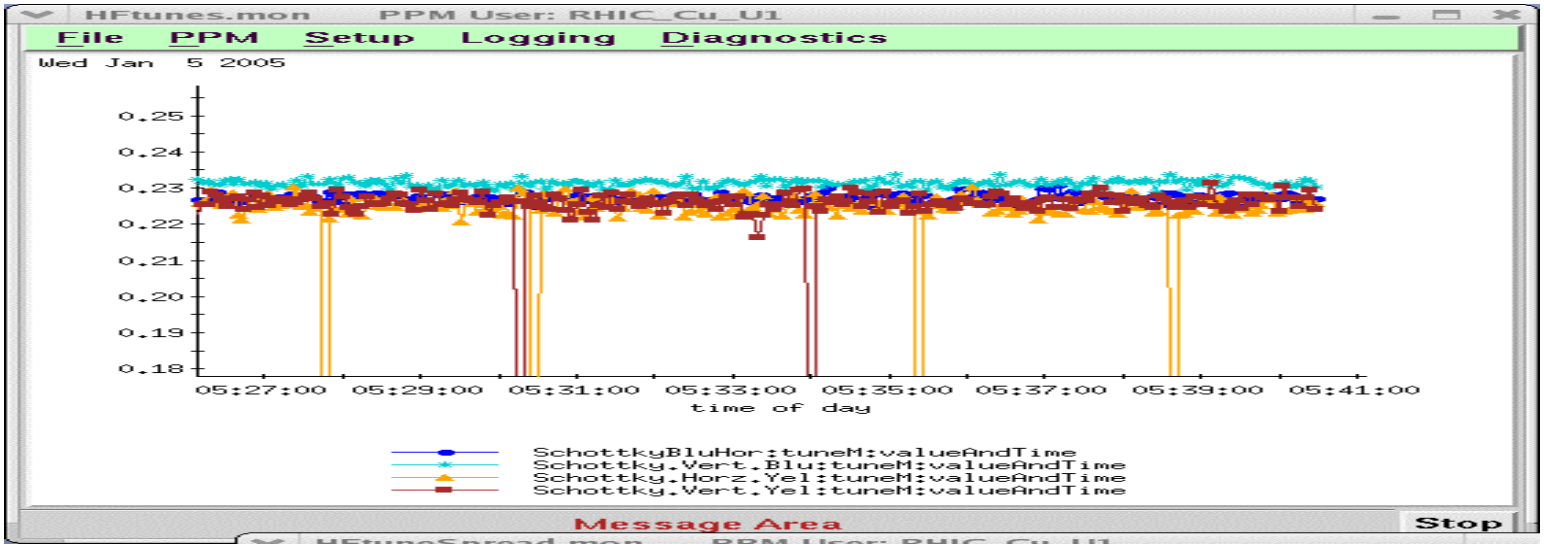

Emittance growth after long store (HFS)
Low luminosity lifetime

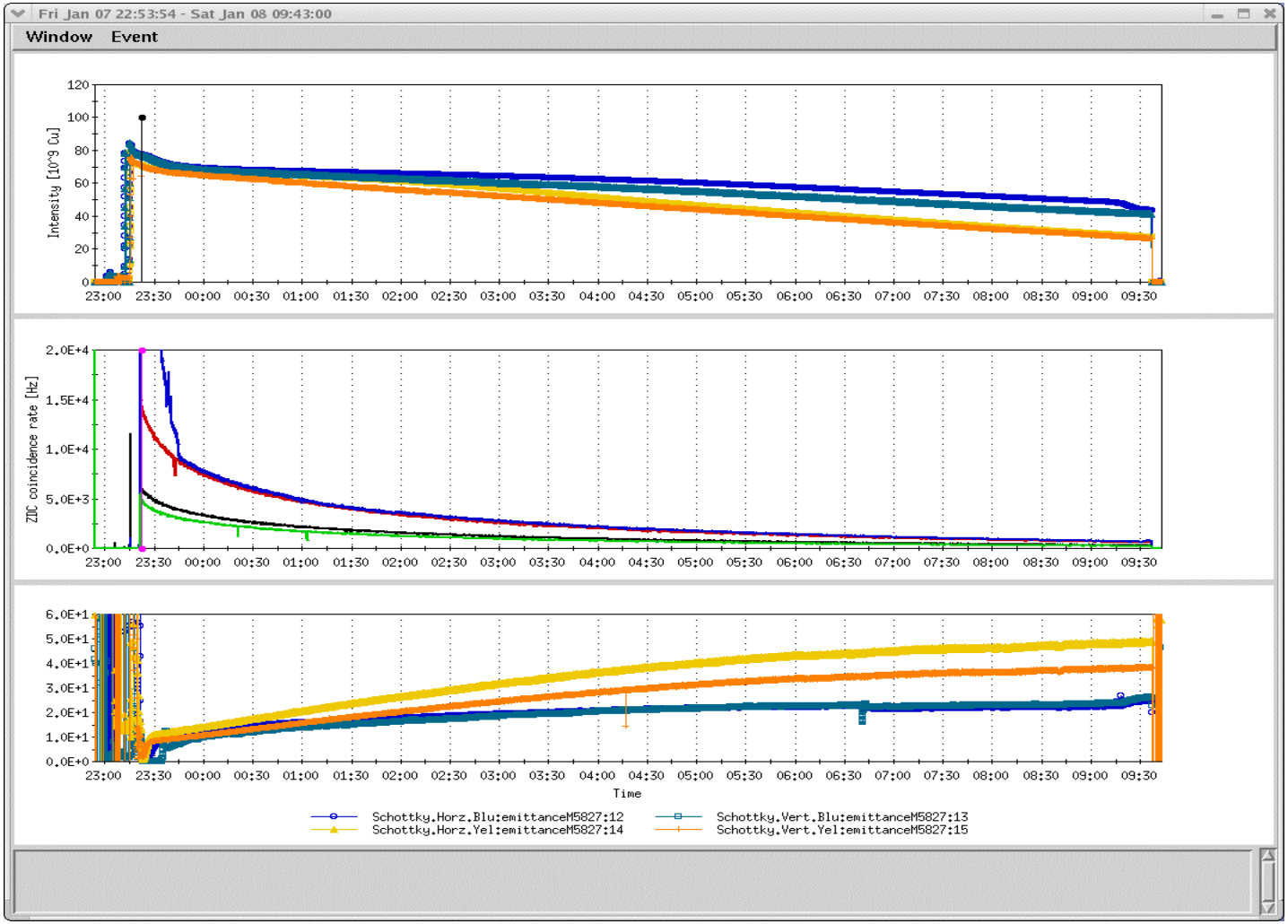

Importance of HFS chrom. Radial offsets of PLL

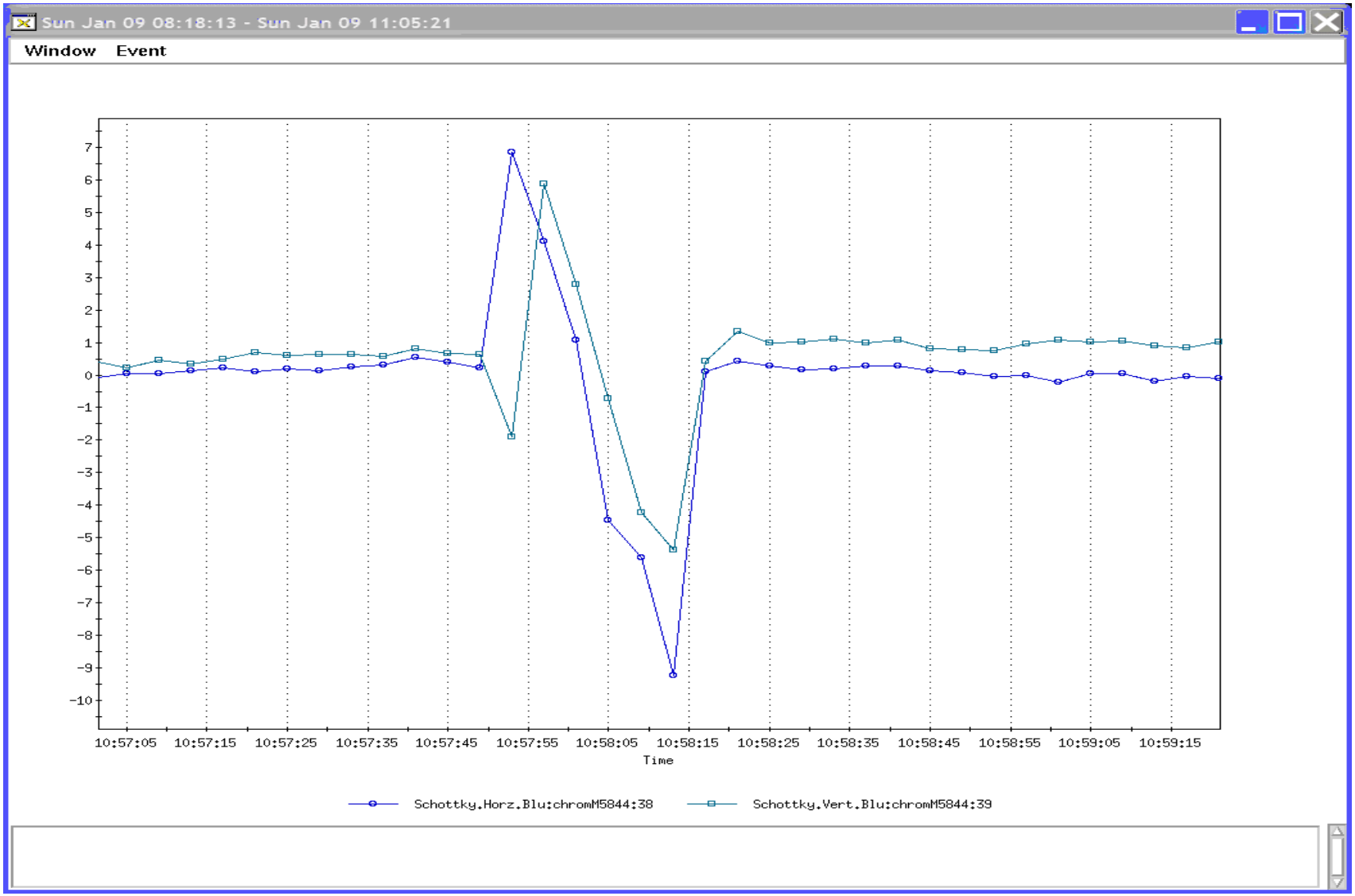

Schottky Accomplishments RHIC 2004 Run

Kurt Vetter

- ✓ Implemented FFT signal processing in DSP
- ✓ Reliable tune monitoring at store
- ✓ Some success with 2GHz DRO synthesizer, *but not good enough for HFS ramp diagnostics*
- ✓ Completely re-wrote LabView code

HFS Problems

- HF Schottky synthesizer losses lock on ramp
  - Phase-Locked DRO gets confused by DDS noise due to high frequency multiplication ratio, phase noise increase by $20 \cdot Log(262) = 48dB$
- Line width dithering that seems to be related to FFT averaging.
  - Effects Chromaticity and Tune Spread
- Unsuccessful attempt to implement decimation in DSP to increase spectral resolution. Spectral artifacts. Increased resolution important for LF Schottky

High Frequency Schottky

Former HF Schottky Architecture

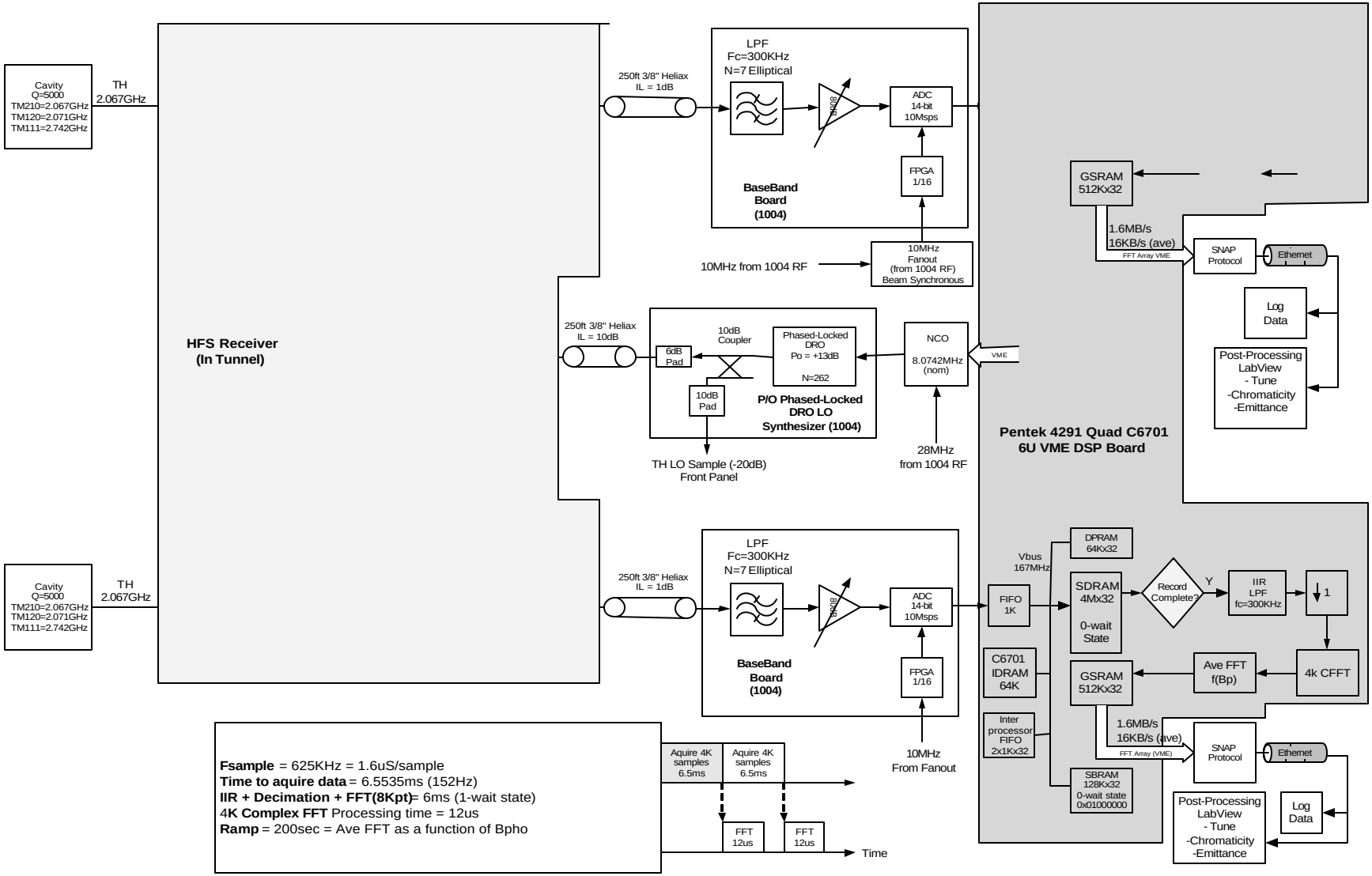

Present HF Schottky Architecture

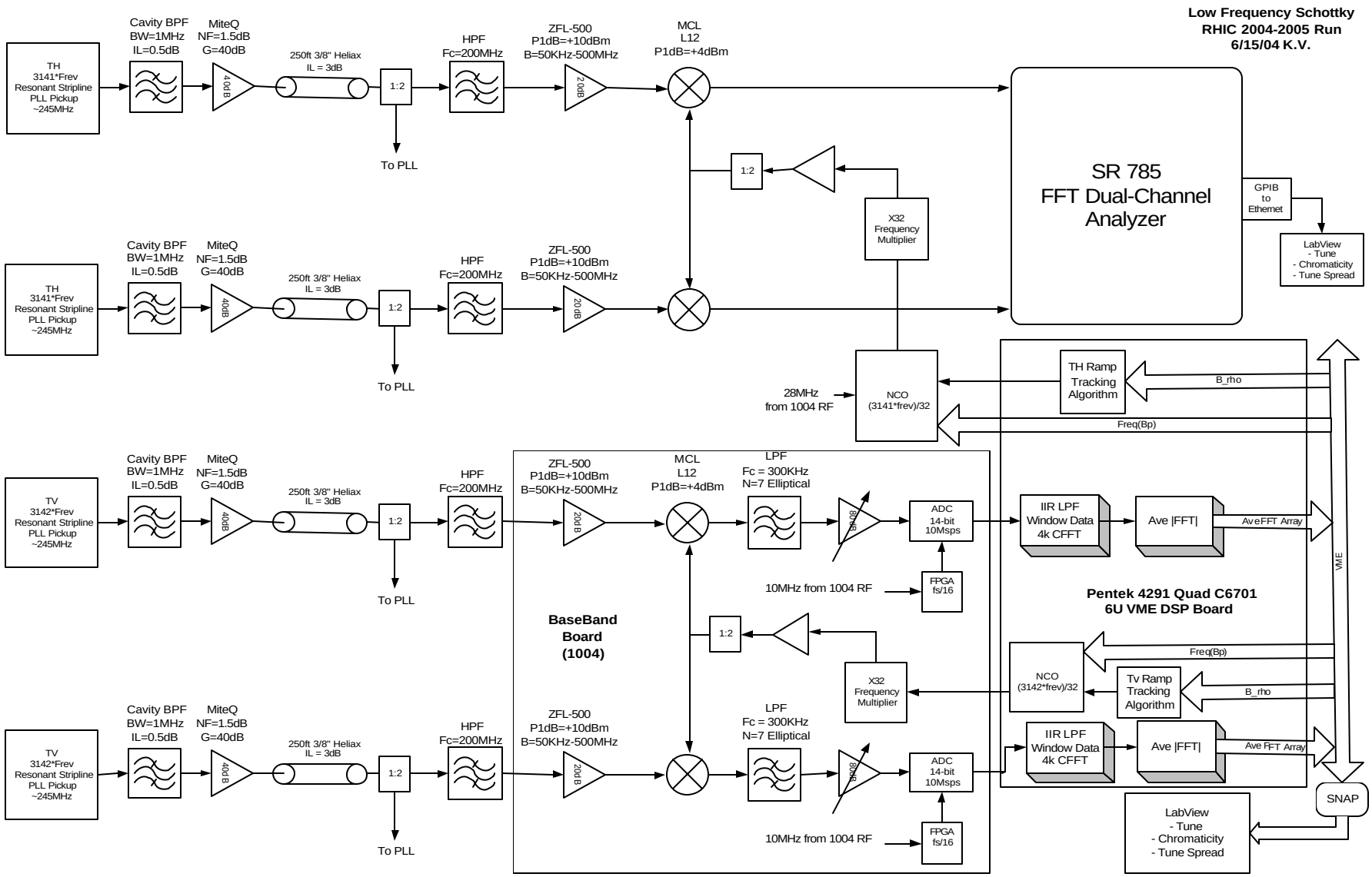

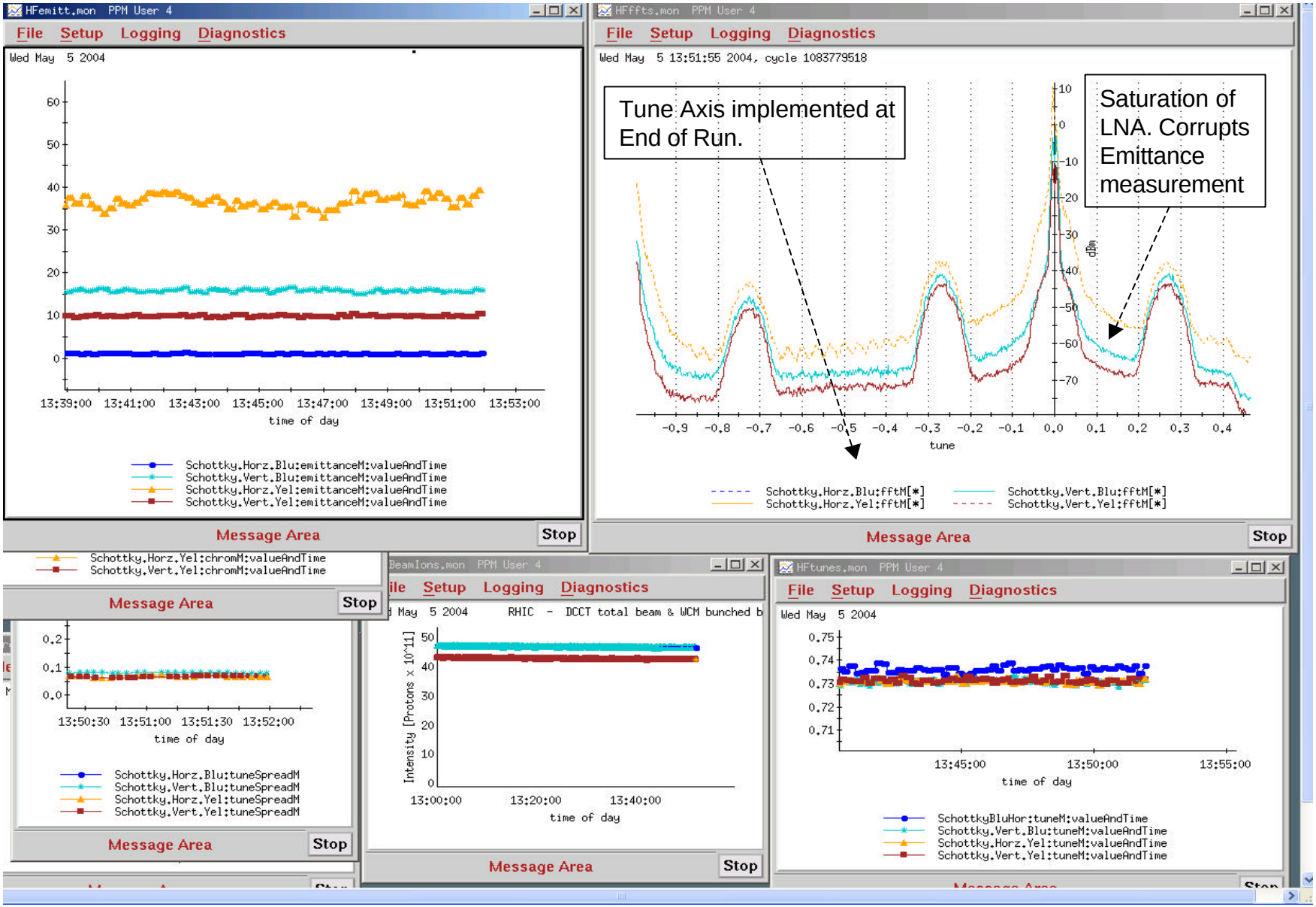
HFemitt.mon PPM User 4
File Setup Logging Diagnostics
Wed May 5 2004
time of day
Schottky.Horz.Blu:emittanceM:valueAndTime
Schottky.Vert.Blu:emittanceM:valueAndTime
Schottky.Horz.Yel:emittanceM:valueAndTime
Schottky.Vert.Yel:emittanceM:valueAndTime
Message Area
Stop
HFffts.mon PPM User 4
File Setup Logging Diagnostics
Wed May 5 13:51:55 2004, cycle 1083779518
Tune Axis implemented at End of Run.
Saturation of LNA. Corrupts Emittance measurement
dBm
tune
Schottky.Horz.Blu:fftM[*]
Schottky.Horz.Yel:fftM[*]
Schottky.Vert.Blu:fftM[*]
Schottky.Vert.Yel:fftM[*]
Message Area
Stop
Schottky.Horz.Yel:chromM:valueAndTime
Schottky.Vert.Yel:chromM:valueAndTime
Message Area
Stop
time of day
Schottky.Horz.Blu:tuneSpreadM
Schottky.Vert.Blu:tuneSpreadM
Schottky.Horz.Yel:tuneSpreadM
Schottky.Vert.Yel:tuneSpreadM
Message Area
Stop
BeamIons.mon PPM User 4
File Setup Logging Diagnostics
May 5 2004 RHIC - DCCT total beam & WCM bunched b
Intensity [Protons x 10^11]
time of day
Message Area
Stop
HFtunes.mon PPM User 4
File Setup Logging Diagnostics
Wed May 5 2004
time of day
SchottkyBluHor:tuneM:valueAndTime
Schottky.Vert.Blu:tuneM:valueAndTime
Schottky.Horz.Yel:tuneM:valueAndTime
Schottky.Vert.Yel:tuneM:valueAndTime

Proposed HF Schottky Synthesizer

(Translation “offset” Loop)

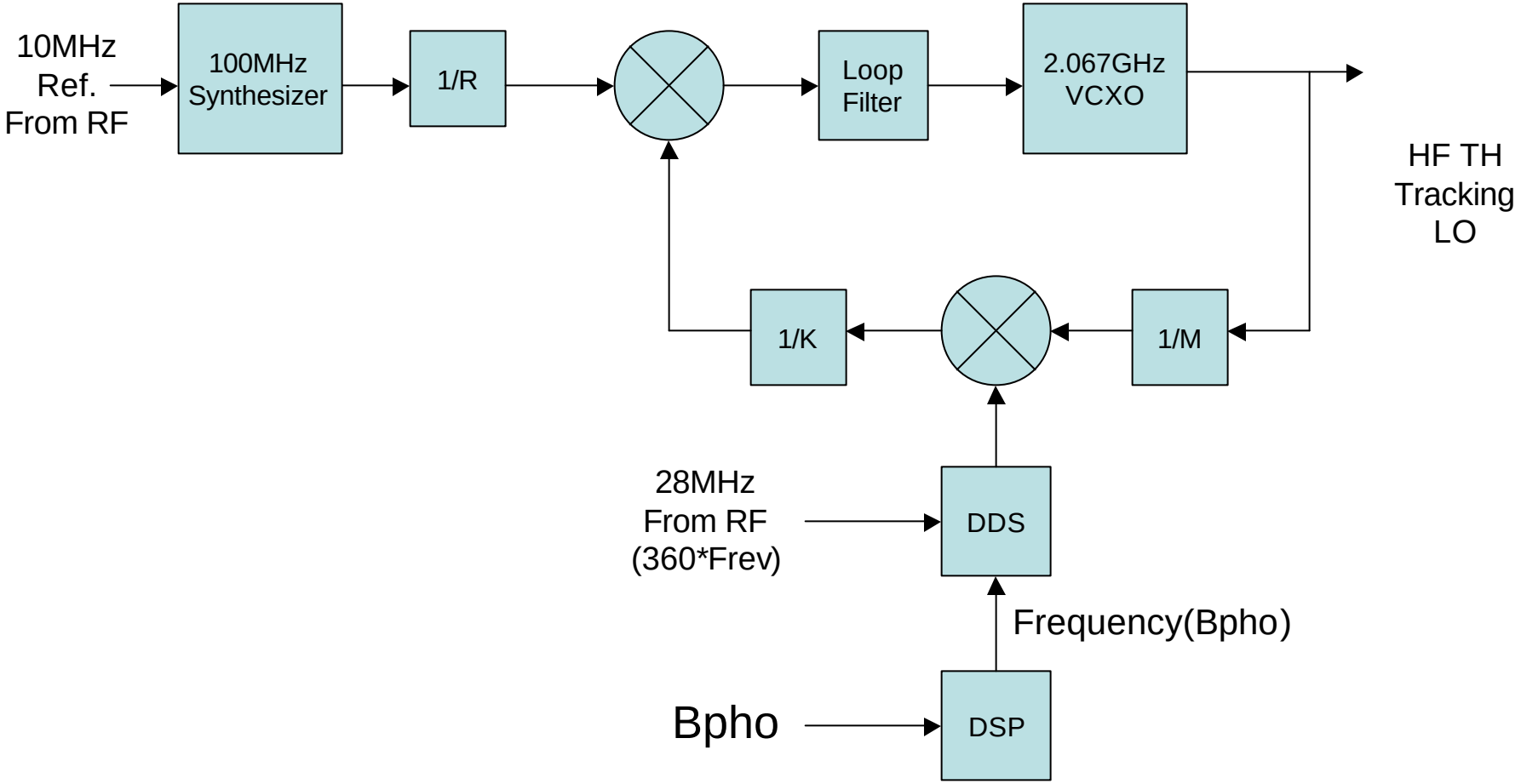

Low Frequency Schottky

Proposed LF Schottky Architecture

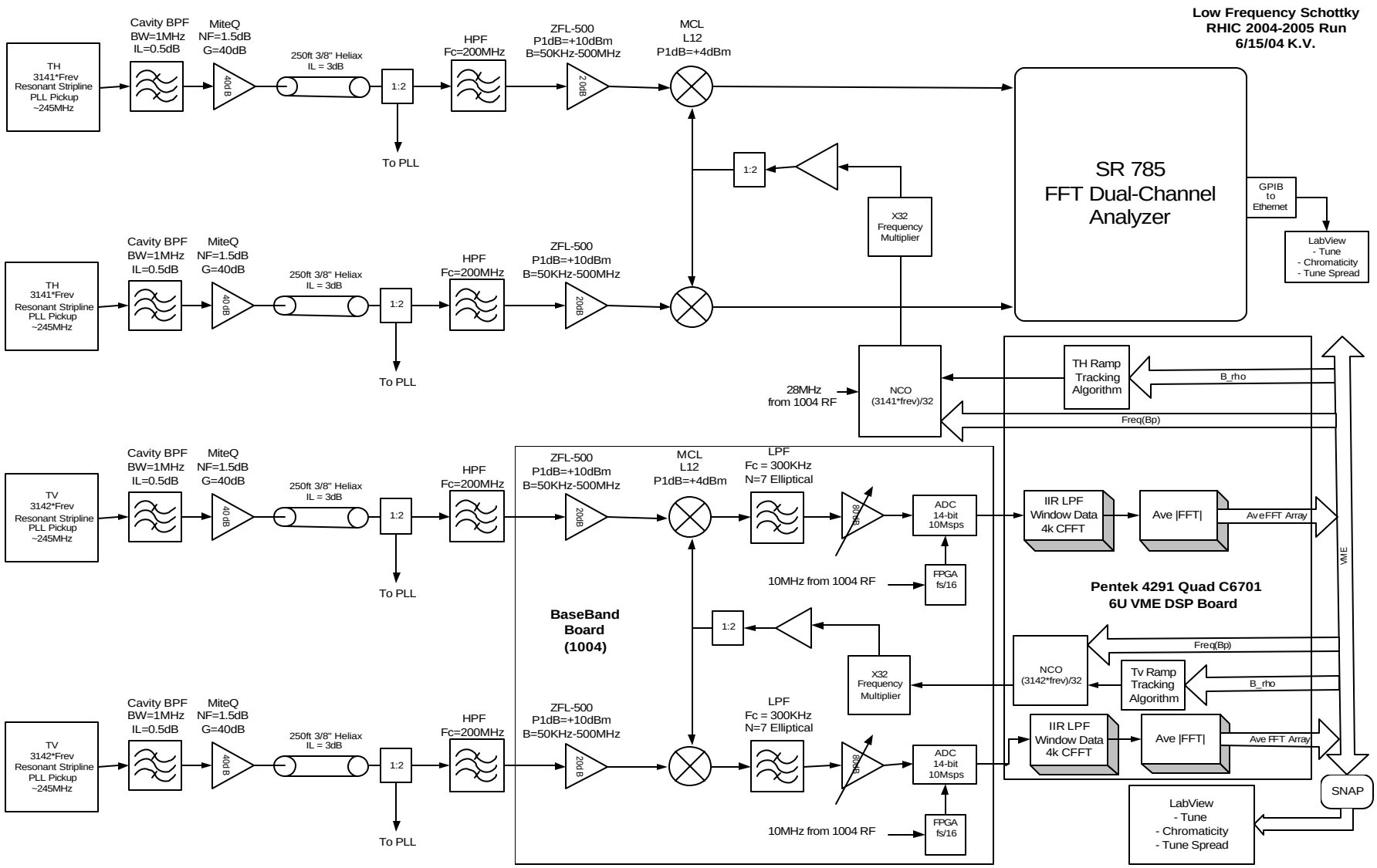

HFS has large frequency swing ~2Ghz, much greater than BW of cavity. Whereas LFS able to track a single chunk of spectrum without moving out of the resonant PU bandwidth.

Measurements of LFS

1. More precise tune measurements at store due to narrow linewidth.

2. Coupling measurement, because HFS difficulty, separately resolving coupled tunes.

3. Instability monitor.

Solutions

- Use FFT analyzer to perform measurements in LF Schottky regime. Tracking synthesizer included for ramp diagnostics. ***Goal is to implement simplest hardware architecture to maximize reliability of measurment.***
  - Tune Tracking on Ramp
  - Chromaticity
  - Tune Spread

- Line widths reduced at Low Frequency by ratio of harmonic numbers
  - For the PLL pickup at 245MHz: (26500/3142), df=830Hz (7KHz@2GHz)

- Use HF Schottky for RMS emittance and course Tune measurements at store only

Measurement Plans

- Tune
- Chromaticity
- Tune Spread
- Emittance

Job List

- Implement motion control *(eliminate coherent saturation)*
  - ✓ Design complete, scheduled for implementation
- Buy 2-channel Baseband FFT Analyzer
- Design, build and test 2GHz synthesizer(HFS lo)
- Design, build and test 200Mhz synthesizer (to free up signal generator(freq. Mult 10-200-2069Mhz)

Add measurement cursors to GPM *(operations help?)*

- Traveling wave PU for RHIC