J1/P1

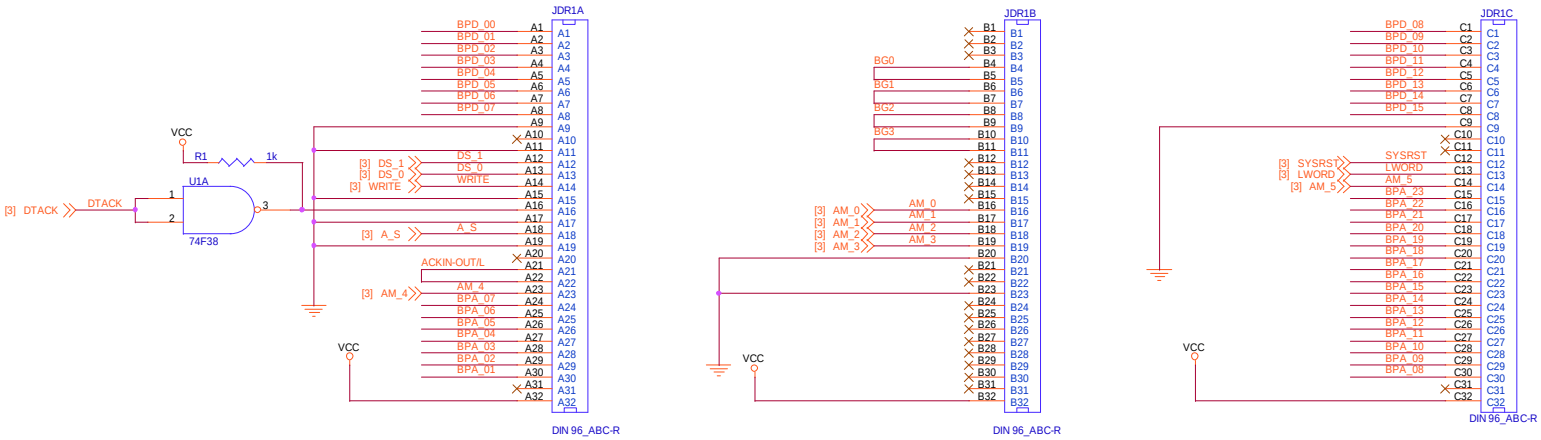

with DIR high A -> B
with DIR low B -> A

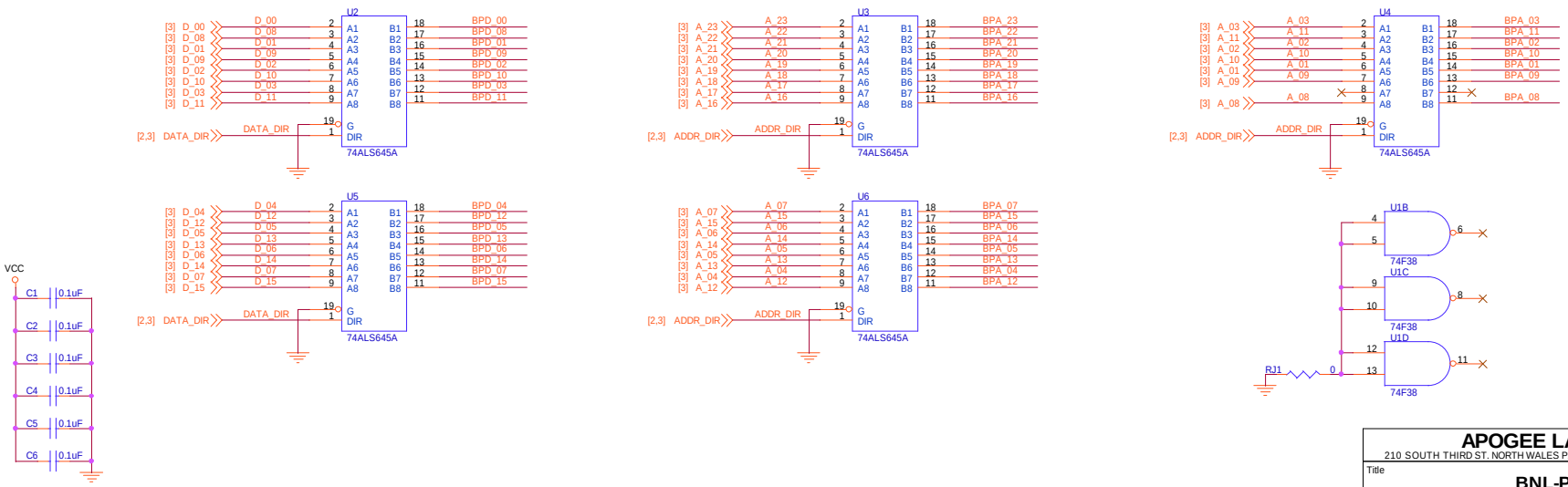

APOGEE LABS INC.
210 SOUTH THIRD ST. NORTH WALES PA 19044 [PHONE: (215) 699-2060]

Title	**BNL-PSC**		
Size Custom	Document Number **SHPC-014**	Date Tuesday, May 15, 2001	Rev B
Engineer Kevin Krasinski	Sheet 1 of 9	Page Name P1 CONN	

J2/P2

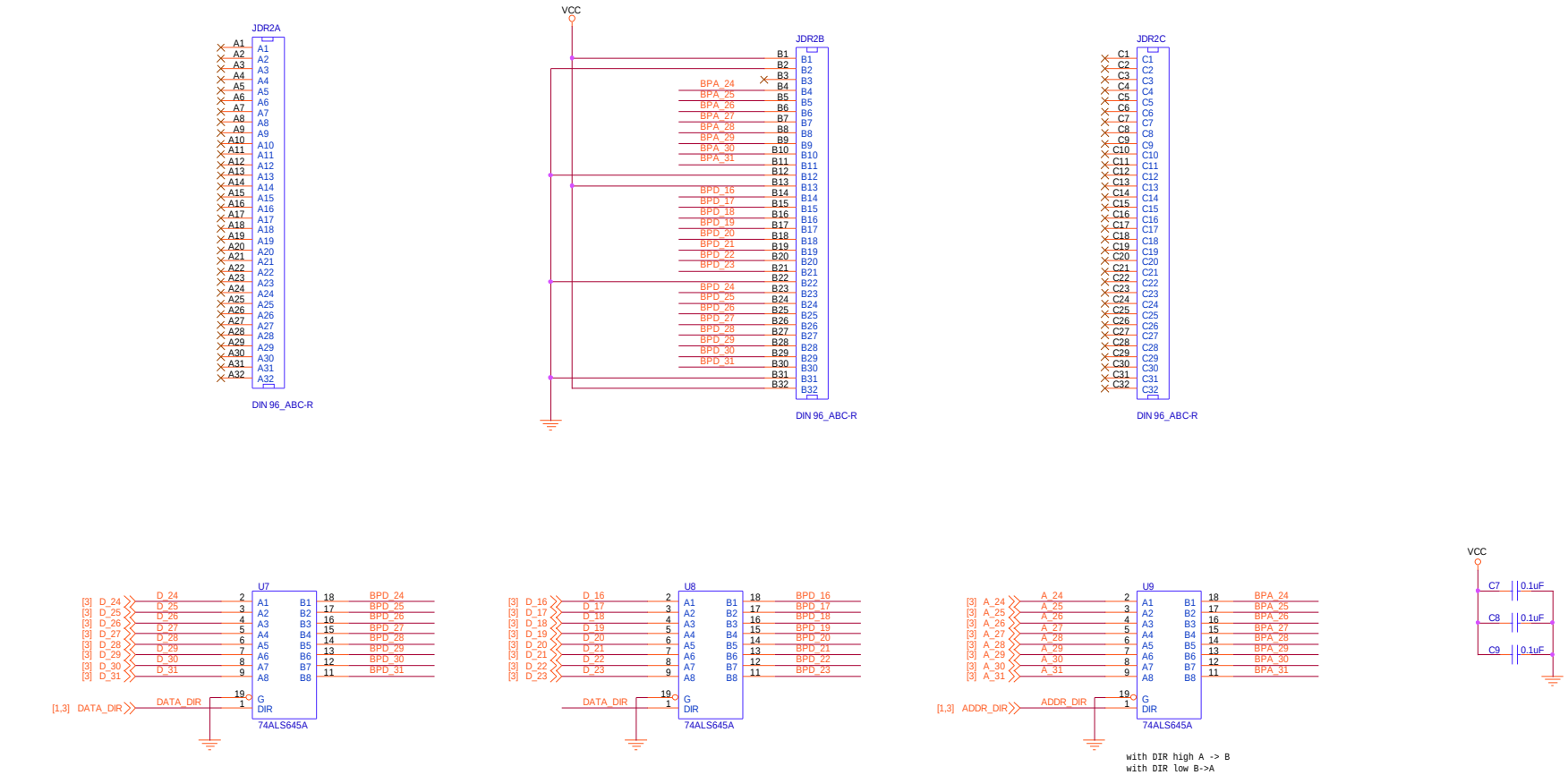

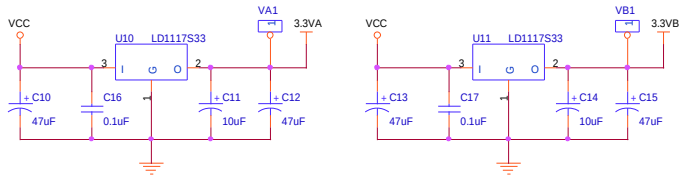

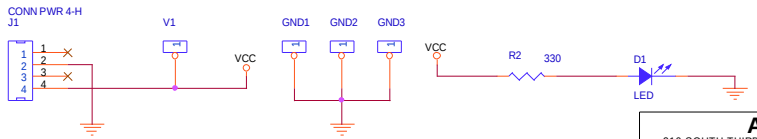

APOGEE LABS INC.
210 SOUTH THIRD ST. NORTH WALES PA 19044 [PHONE: (215) 699-2060]

Title	BNL-PSC		
Size Custom	Document Number SHPC-014	Date Tuesday, May 15, 2001	Rev B
Engineer Kevin Krasinski		Sheet 2 of 9	
		Page Name P2 CONN / POWER	

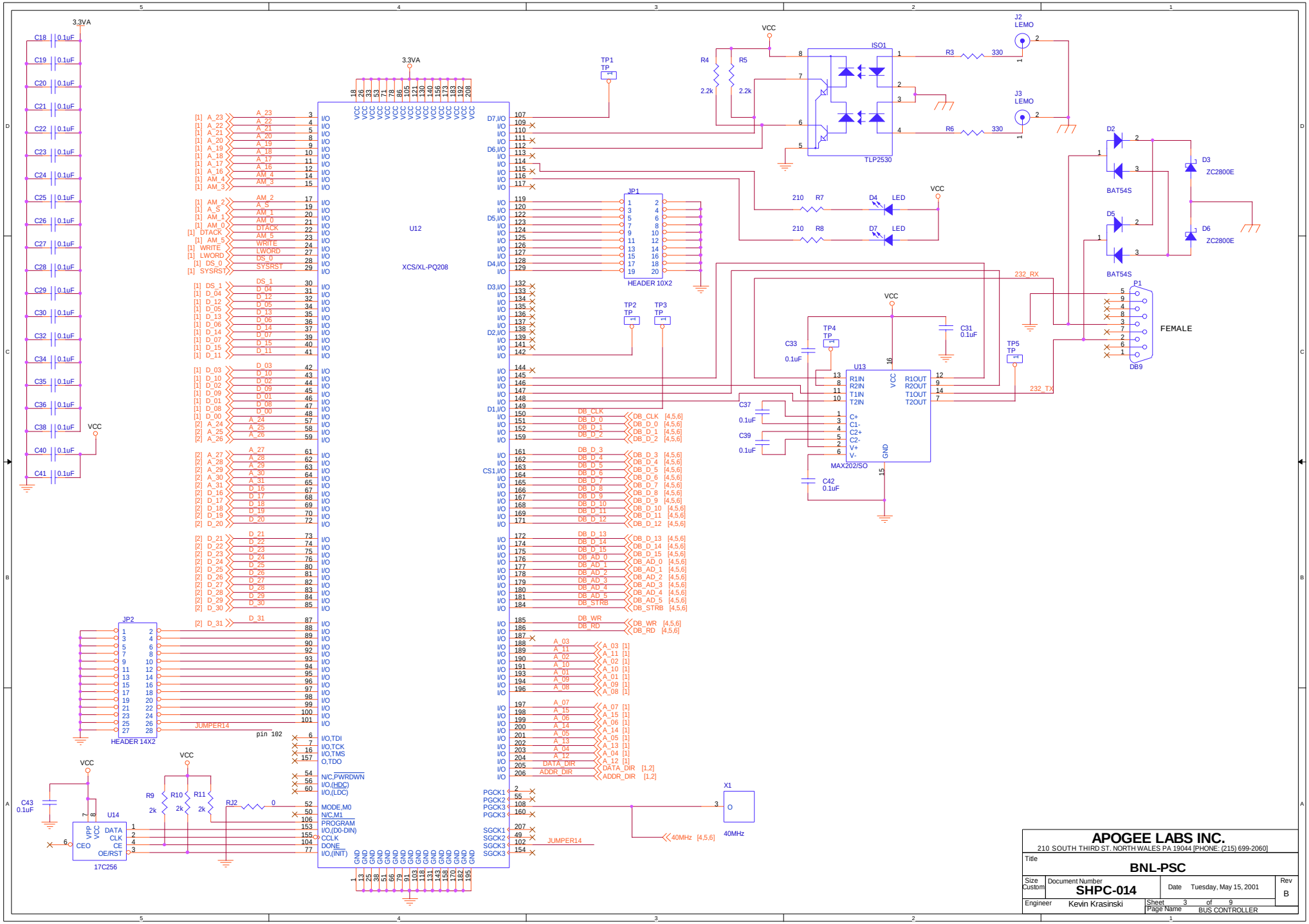

APOGEE LABS INC.

210 SOUTH THIRD ST. NORTH WALES PA 19044 [PHONE: (215) 699-2060]

Title	BNL-PSC		
Size Custom	Document Number SHPC-014	Date Tuesday, May 15, 2001	Rev B
Engineer Kevin Krasinski	Sheet 3 of 9	Page Name BUS CONTROLLER	

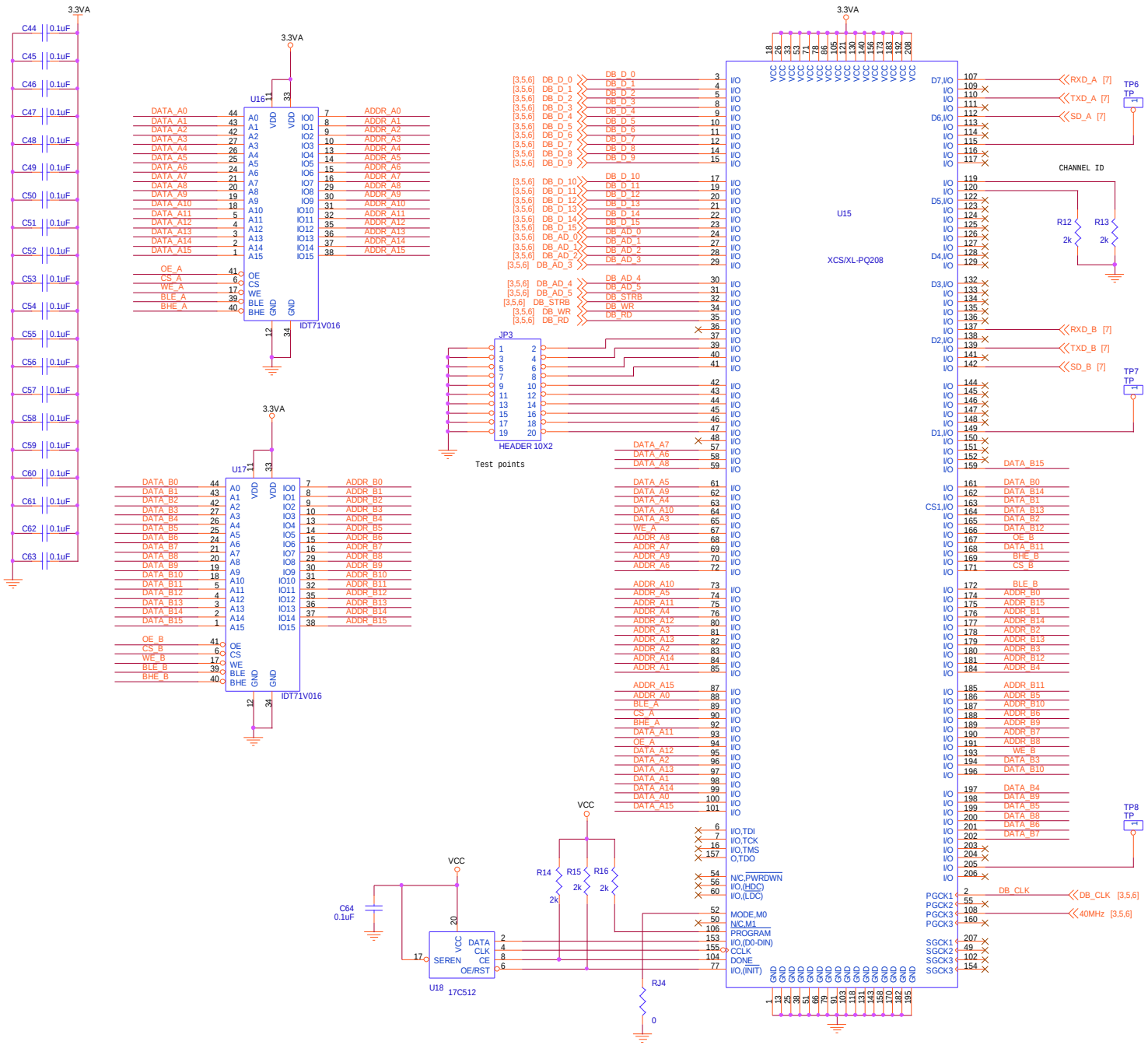

APOGEE LABS INC.

210 SOUTH THIRD ST. NORTH WALES PA 19044 [PHONE: (215) 699-2060]

Title	BNL-PSC		
Size Custom	Document Number SHPC-014	Date Tuesday, May 15, 2001	Rev B
Engineer Kevin Krasinski	Sheet 4 of 9	Page Name XILINX CH1	

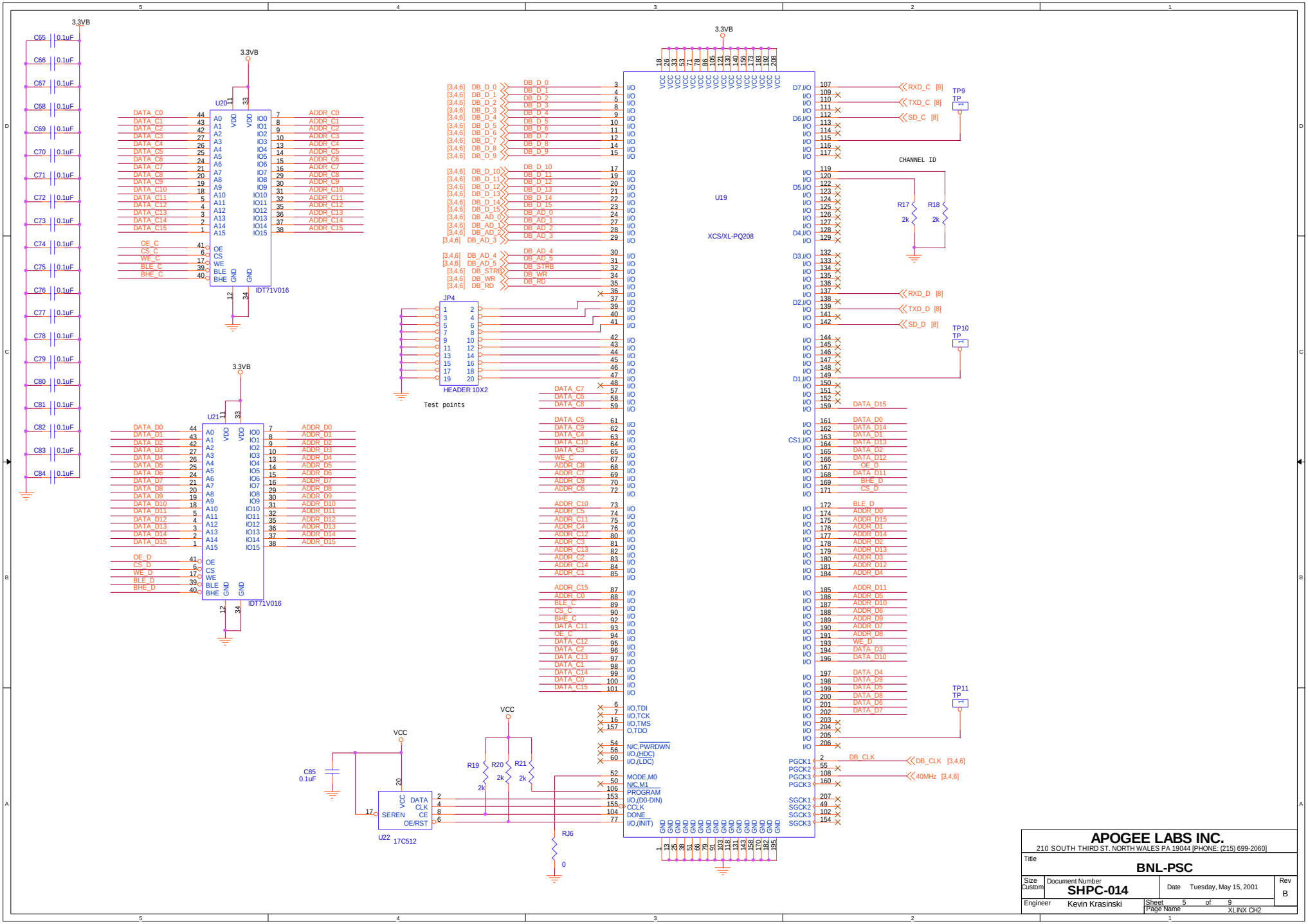
3.3VB
C65 0.1uF
C66 0.1uF
C67 0.1uF
C68 0.1uF
C69 0.1uF
C70 0.1uF
C71 0.1uF
C72 0.1uF
C73 0.1uF
C74 0.1uF
C75 0.1uF
C76 0.1uF
C77 0.1uF
C78 0.1uF
C79 0.1uF
C80 0.1uF
C81 0.1uF
C82 0.1uF
C83 0.1uF
C84 0.1uF
U20
IDT71V016
U21
IDT71V016
JP4
HEADER 10X2
Test points
U19
XCS/XL-PQ208
CHANNEL ID
R17 2k
R18 2k
TP9 TP
TP10 TP
TP11 TP
RXD_C [8]
TXD_C [8]
SD_C [8]
RXD_D [8]
TXD_D [8]
SD_D [8]
DB_CLK [3,4,6]
40MHz [3,4,6]
VCC
C85 0.1uF
R19 2k
R20 2k
R21 2k
U22 17C512
RJ6 0
APOGEE LABS INC.
210 SOUTH THIRD ST. NORTH WALES PA 19044 [PHONE: (215) 699-2060]
Title
BNL-PSC
Size Custom
Document Number
SHPC-014
Date Tuesday, May 15, 2001
Rev B
Engineer Kevin Krasinski
Sheet 5 of 9
Page Name XLINX CH2

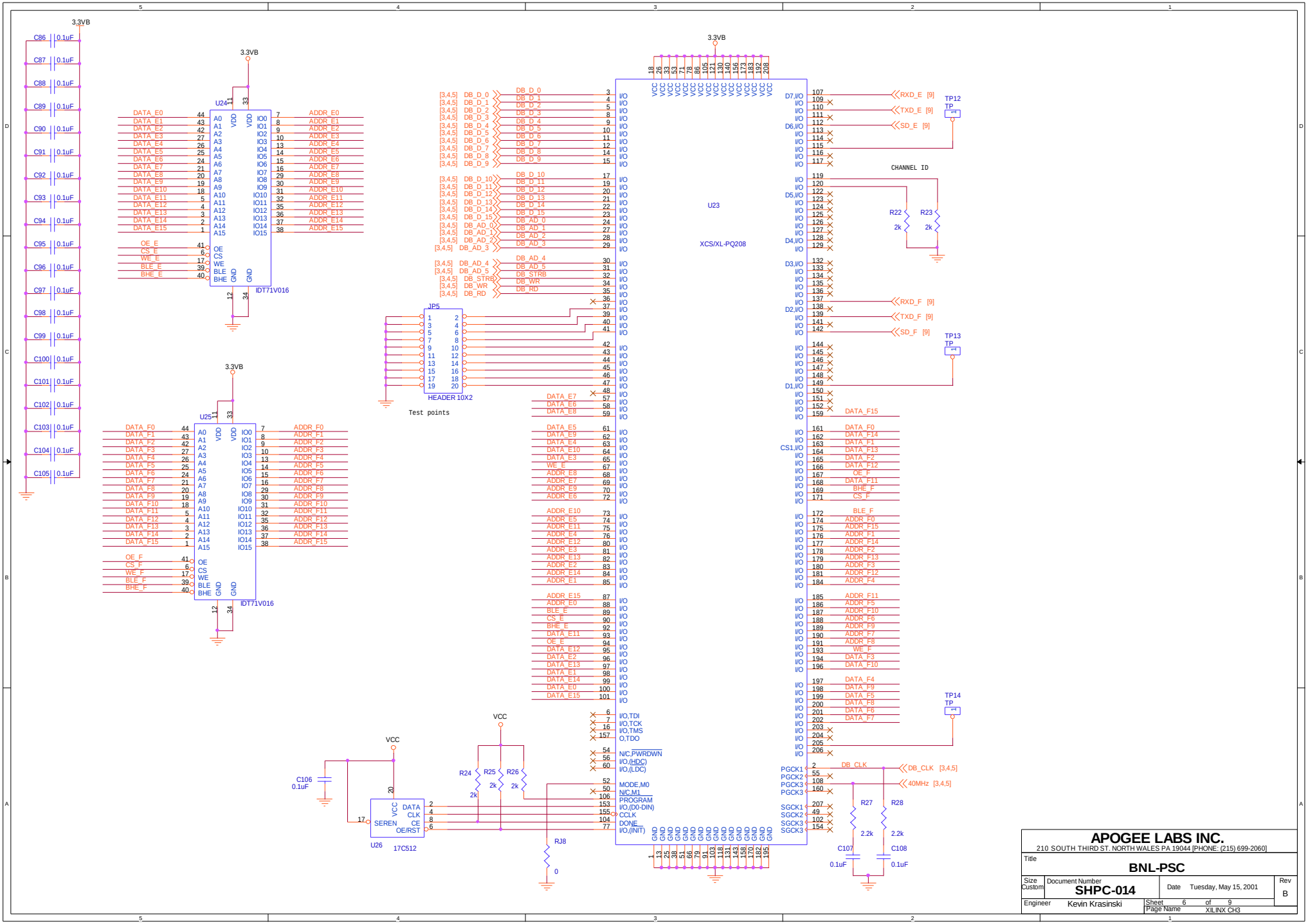
3.3VB
C86 0.1uF
C87 0.1uF
C88 0.1uF
C89 0.1uF
C90 0.1uF
C91 0.1uF
C92 0.1uF
C93 0.1uF
C94 0.1uF
C95 0.1uF
C96 0.1uF
C97 0.1uF
C98 0.1uF
C99 0.1uF
C100 0.1uF
C101 0.1uF
C102 0.1uF
C103 0.1uF
C104 0.1uF
C105 0.1uF
U24
IDT71V016
U25
IDT71V016
JP5
HEADER 10X2
Test points
U23
XCS/XL-PQ208
CHANNEL ID
R22 2k
R23 2k
TP12 TP
TP13 TP
TP14 TP
RXD_E [9]
TXD_E [9]
SD_E [9]
RXD_F [9]
TXD_F [9]
SD_F [9]
DB_CLK [3,4,5]
40MHz [3,4,5]
R27 2.2k
R28 2.2k
C107 0.1uF
C108 0.1uF
VCC
C106 0.1uF
U26
17C512
R24 2k
R25 2k
R26 2k
RJ8 0
APOGEE LABS INC.
210 SOUTH THIRD ST. NORTH WALES PA 19044 [PHONE: (215) 699-2060]
Title
BNL-PSC
Size Custom
Document Number
SHPC-014
Date Tuesday, May 15, 2001
Rev B
Engineer Kevin Krasinski
Sheet 6 of 9
Page Name XILINX CH3

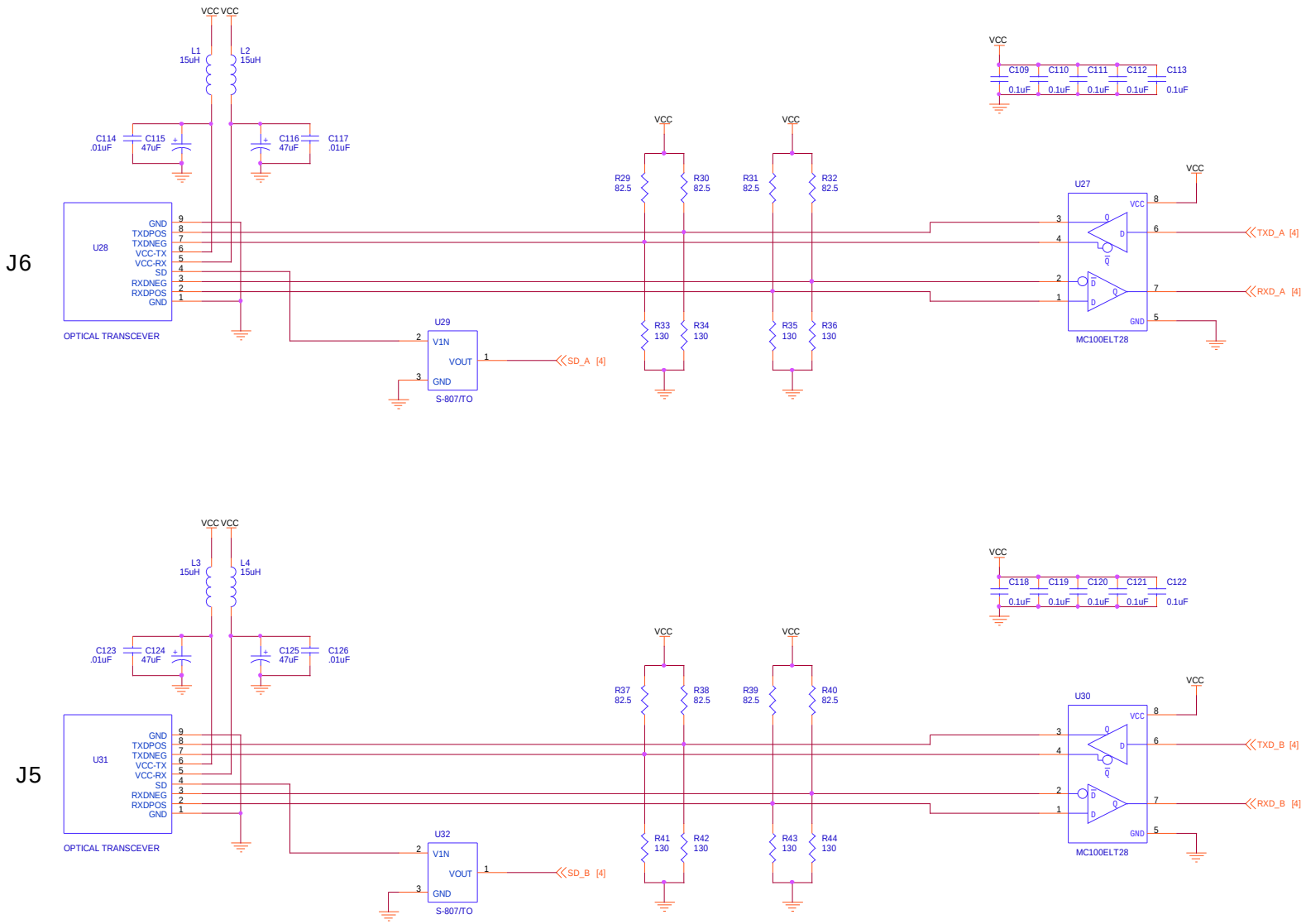

APOGEE LABS INC.
210 SOUTH THIRD ST. NORTH WALES PA 19044 [PHONE: (215) 699-2060]

Title	**BNL-PSC**		
Size Custom	Document Number **SHPC-014**	Date Tuesday, May 15, 2001	Rev B
Engineer Kevin Krasinski	Sheet 7 of 9	Page Name CH-A / CH-B	

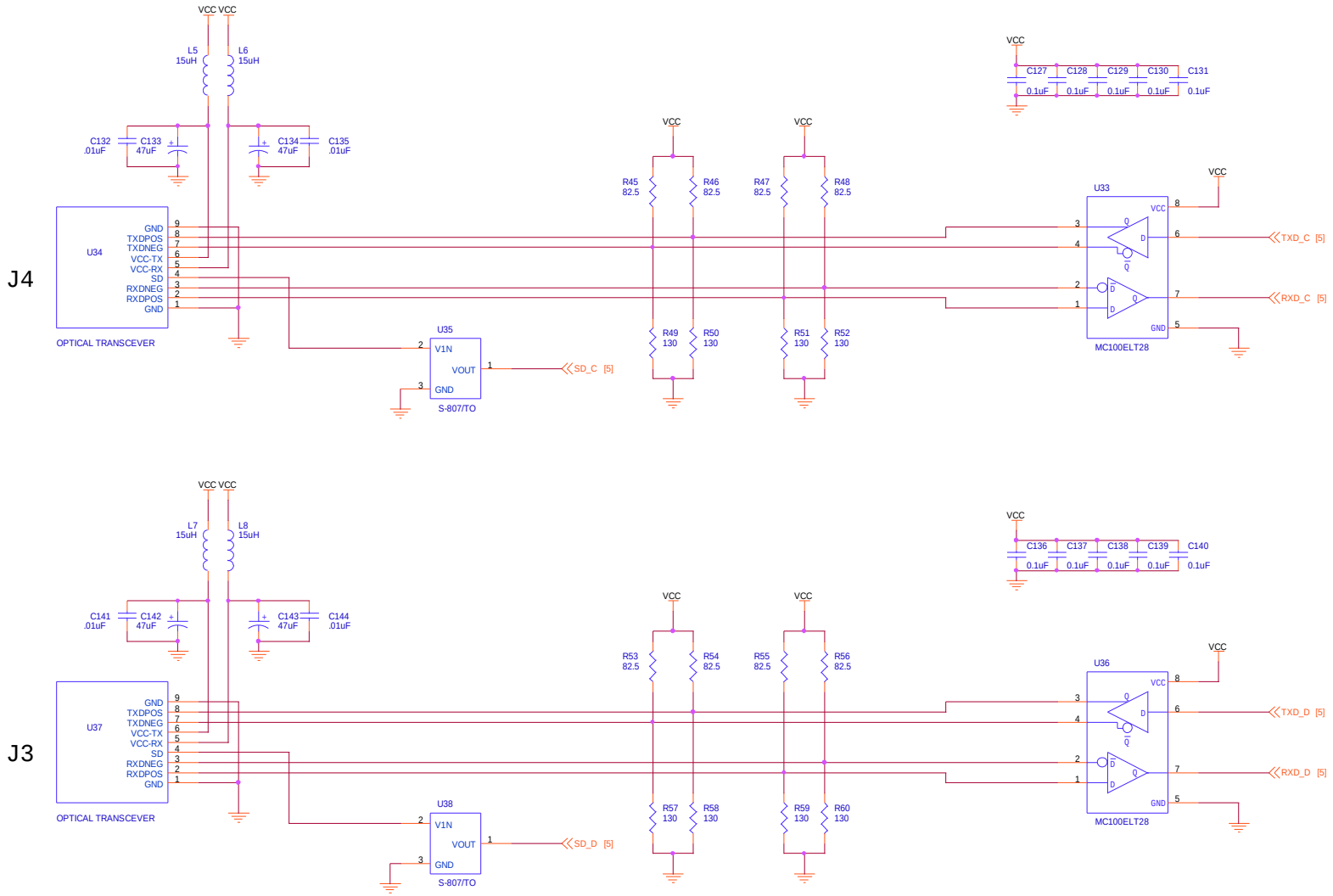

APOGEE LABS INC.
210 SOUTH THIRD ST. NORTH WALES PA 19044 [PHONE: (215) 699-2060]

Title	**BNL-PSC**		
Size Custom	Document Number **SHPC-014**	Date Tuesday, May 15, 2001	Rev B
Engineer Kevin Krasinski	Sheet 8 of 9	Page Name CH-C / CH-D	

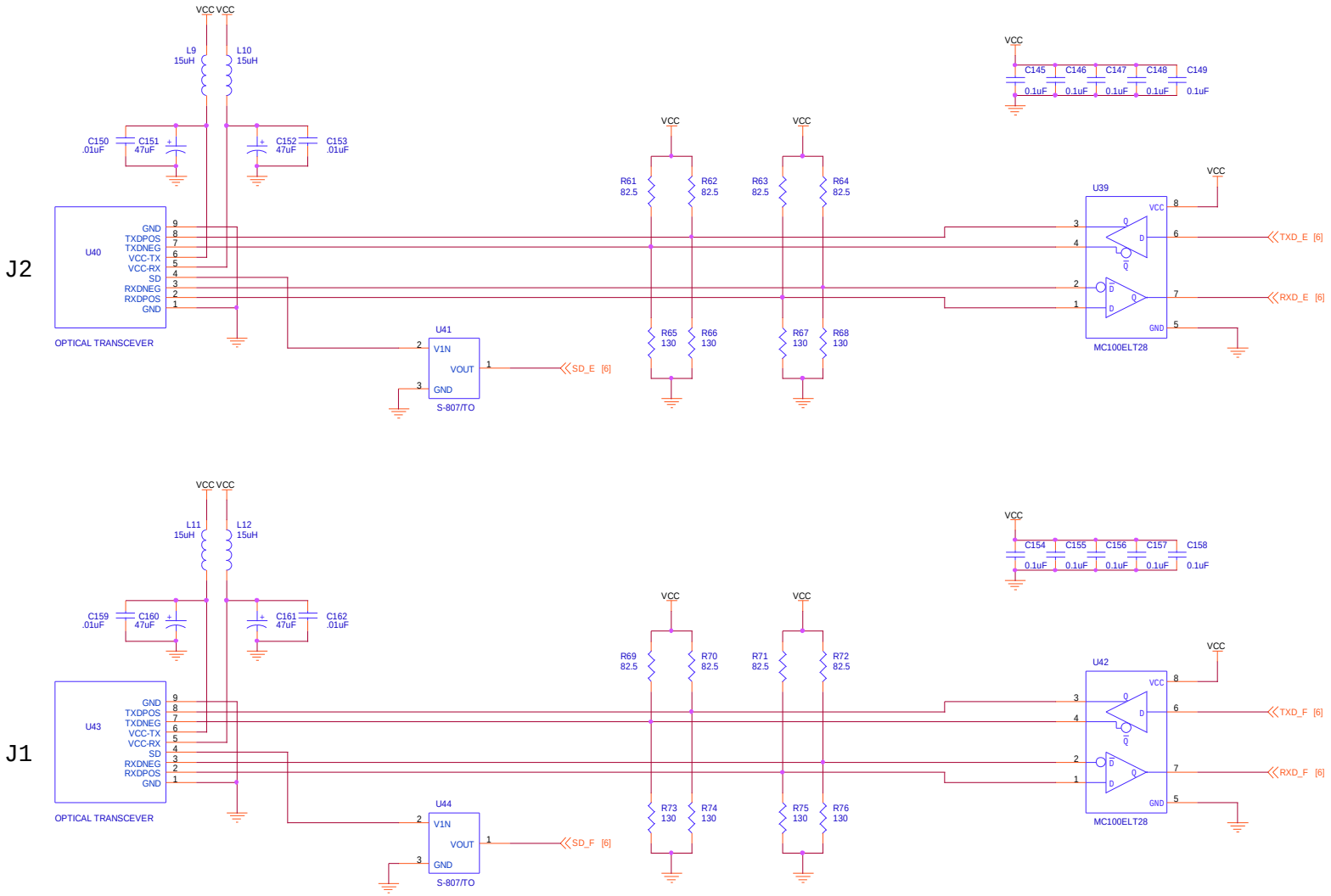

APOGEE LABS INC.
210 SOUTH THIRD ST. NORTH WALES PA 19044 [PHONE: (215) 699-2060]

Title	**BNL-PSC**		
Size Custom	Document Number **SHPC-014**	Date Tuesday, May 15, 2001	Rev B
Engineer Kevin Krasinski	Sheet 9 of 9	Page Name CH-E / CH-F	