SIZE	REV	SHT	DWG NO
A	1	1 OF 1	94028211

REVISIONS

REV	ZONE	ECN NO.	DESCRIPTION	BY	DATE	CKR	APP
A	---	---	RELEASED	MJ	5-10-96	---	---

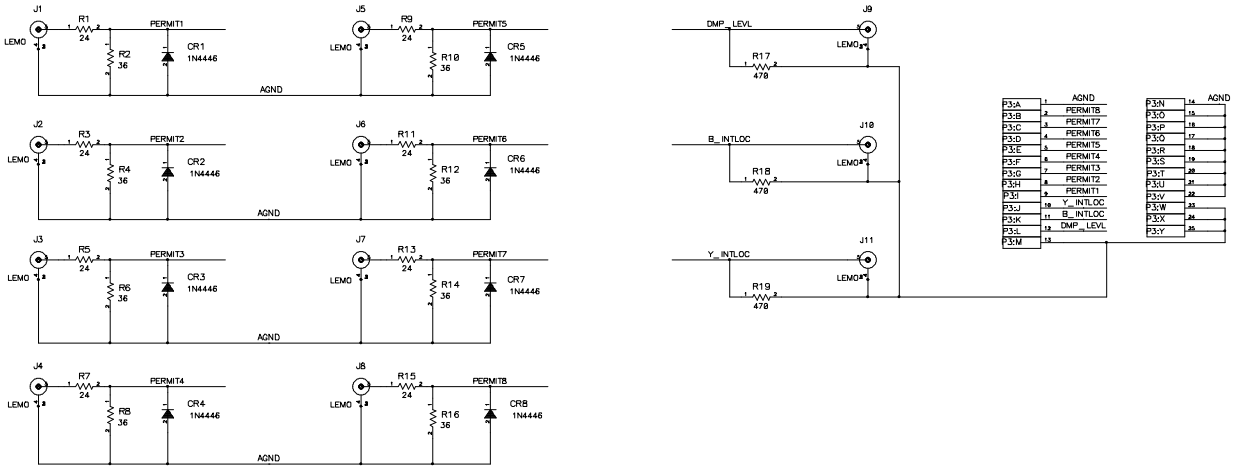

NOTES: UNLESS OTHERWISE SPECIFIED

1. ALL RESISTORS ARE IN OHMS,1/4W,+/-2%.

-3	-2	-1	REF. DESIGNATOR	ITEM NO.	DESCRIPTION	MATL.DWG NO.,BNL NO.
QTY REQD						

OUTSTANDING ECN NUMBERS

INTERPRET IN GENERAL ACCORDANCE WITH ASME Y14.24M-1989

UNLESS OTHERWISE SPECIFIED

DIMENSIONS ARE IN INCHES
DECIMAL TOLERANCES
X .06
XX .03
XXX .005
ANGULAR TOLERANCE ±1°

G.A. A-3 | NEXT ASSEMBLY 94028213

RHIC

DRAWN BY	MIKE JACOBELLIS	5-10-96
DESIGN APPROVAL	D.MULLALY	5-10-96
CHECKED BY	R.CONKLING	5-10-96
ENGINEER APPROVAL	R.CONKLING	5-10-96
SUPERVISOR APPROVAL	B.OERTER	5-10-96
Q.A. APPROVAL	D.PASSARELLO	5-10-96

BROOKHAVEN NATIONAL LABORATORY
ASSOCIATED UNIVERSITIES, INC.
UPTON, N.Y. 11973

TITLE
SCHEMATIC DIAGRAM
PERMIT MODULE INPUT/OUTPUT PANEL

SIZE D | DRAWING NUMBER 94028211 | REV A

SCALE | WEIGHT | SHEET 1 OF 1