controls group, CAD 9/30/2004 10:29 AM multipole_block_vs_hq_vq.dwg

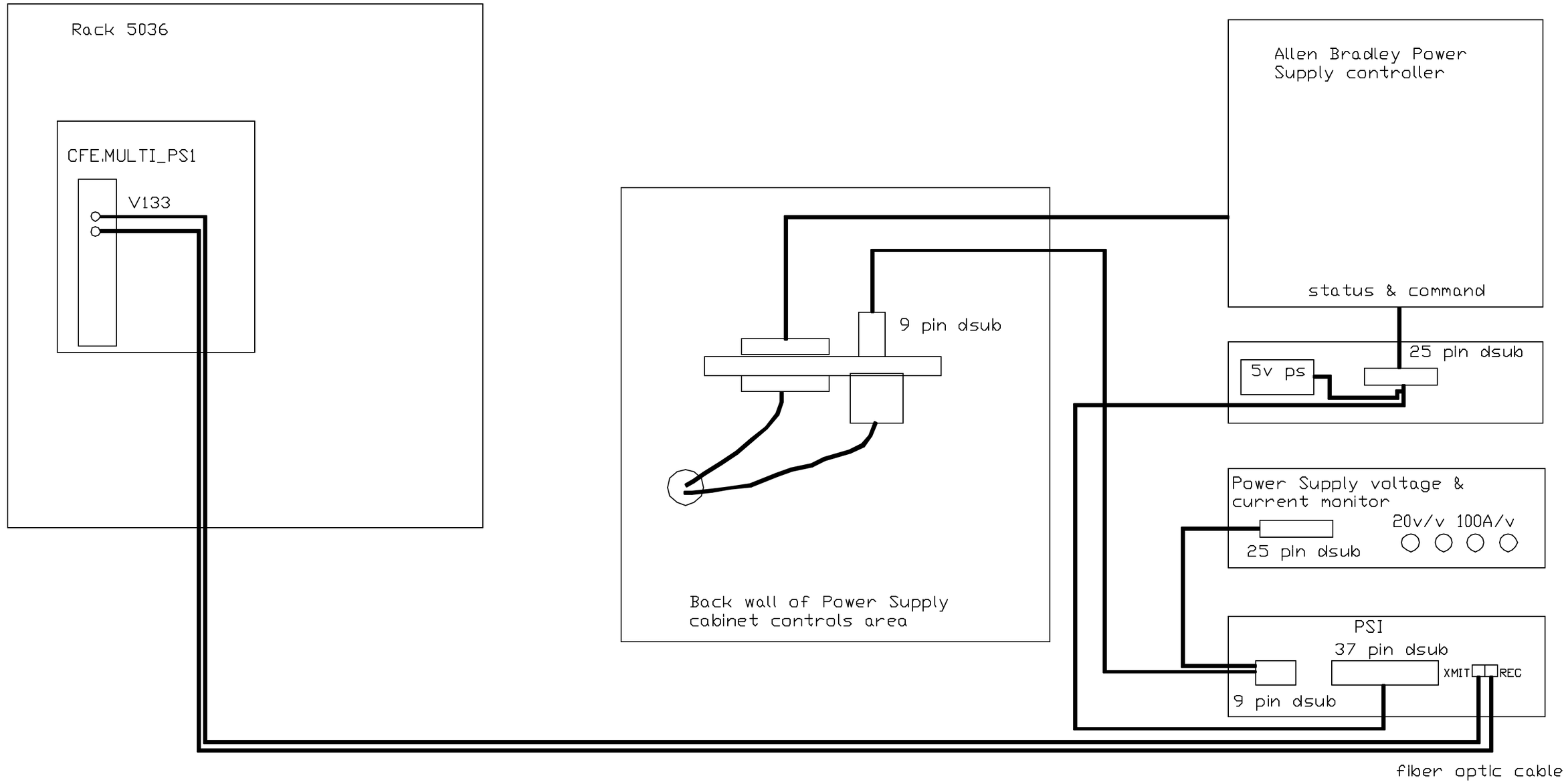

MULTIPOLE POWER SUPPLIES
VERTICAL SEXTIPOLE
HORIZONTAL QUAD
VERTICAL QUAD

-3 -2 -1 QTY REQD	REF DESIGNATOR	ITEM NO.	DESCRIPTION		MATL SPEC NO./DWG NO.
	INTERPRET IN GENERAL ACCORDANCE WITH ASME Y14.24M-1989	Q.A. CATEGORY A-3	DATE	BROOKHAVEN NATIONAL LABORATORY ASSOCIATED UNIVERSITIES, INC. UPTON, N.Y. 11973	
		DRAWN BY Jappe	9/29/04		
	UNLESS OTHERWISE SPECIFIED DIMENSIONS ARE IN INCHES	CHECKED BY		multipole room, cable detail for power supply	
	DECIMAL TOLERANCES .X ±.XX .XX ±.XX .XXX ±.XX	DESIGN APPROVAL		vertical sextipole	
	ANGULAR TOLERANCE ± .XX	ENGINEER APPROVAL		horizontal quad, vertical quad	
		SUPVR. APPROVAL		SIZE A	REV. A
OUTSTANDING ECN	NA FINISH	BREAK SHARP EDGES MAX. .XX MIN. .XX	NEXT ASSEMBLY	DRAWING NUMBER	
				MATERIAL: —— SCALE: NA WEIGHT: — SHEET	

*AUTOCAD

controls group, CAD 9/30/2004 2:19 PM multipole_block_skew.dwg

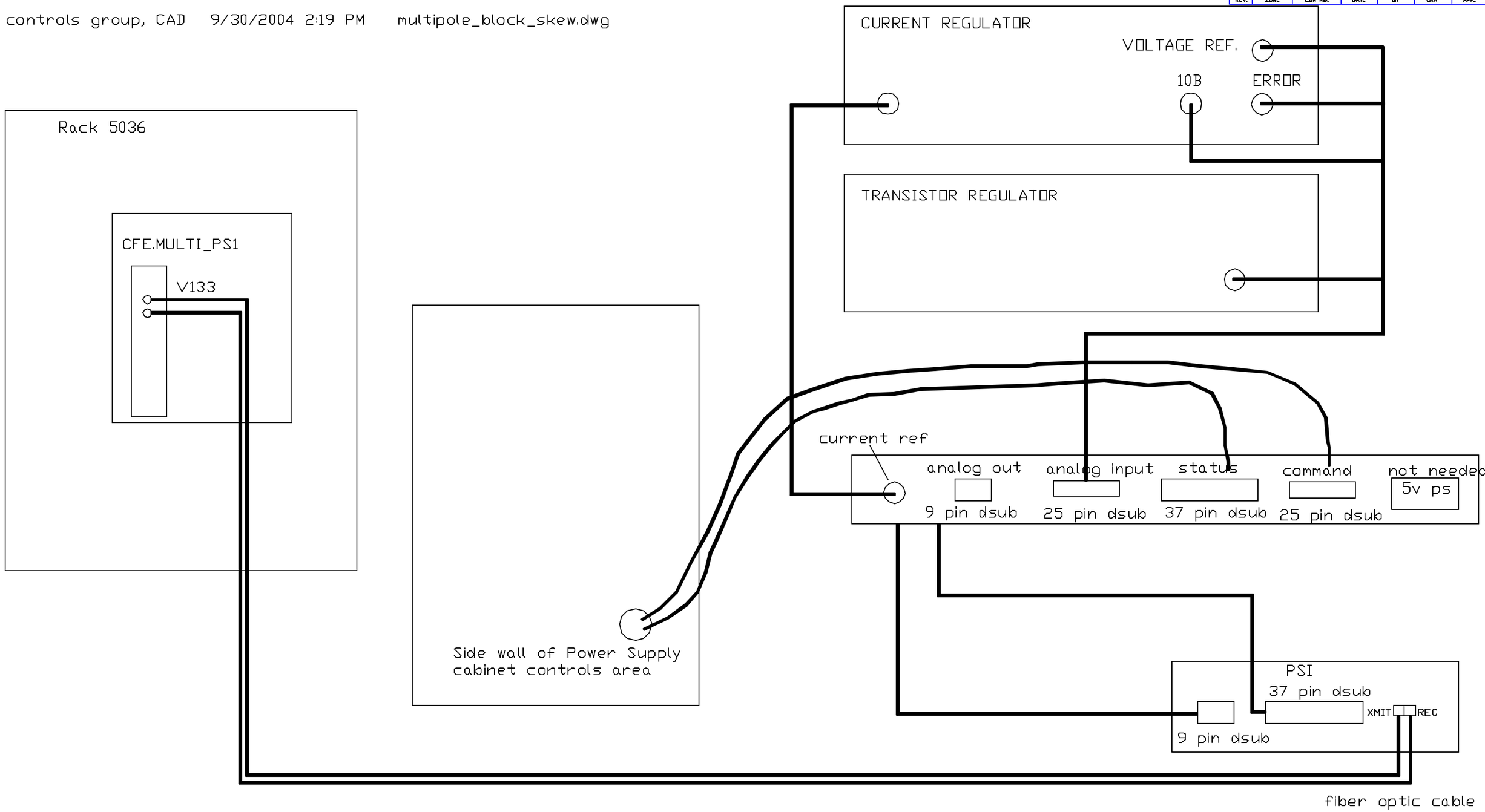

MULTIPOLE POWER SUPPLY
SKEW QUAD

INTERPRET IN GENERAL ACCORDANCE WITH ASME Y14.24M-1989	Q.A. CATEGORY A-3	DATE	BROOKHAVEN NATIONAL LABORATORY ASSOCIATED UNIVERSITIES, INC. UPTON, N.Y. 11973	
UNLESS OTHERWISE SPECIFIED DIMENSIONS ARE IN INCHES	DRAWN BY Joppe	9/29/04	multipole room, block	
DECIMAL TOLERANCES .X ±.XX .XX ±.XX .XXX ±.XX ANGULAR TOLERANCE ± XX	CHECKED BY		SKEW QUAD	
	DESIGN APPROVAL			
	ENGINEER APPROVAL			
	SUPVR. APPROVAL			
NA FINISH	BREAK SHARP EDGES MAX. XX MIN. XX	NEXT ASSEMBLY	SIZE A	REV. A
OUTSTANDING ECN			MATERIAL: —— SCALE: NA WEIGHT: — SHEET	

*AUTOCAD

controls group, CAD 10/1/2004 10:46 AM multipole_block_F20_G20.dwg

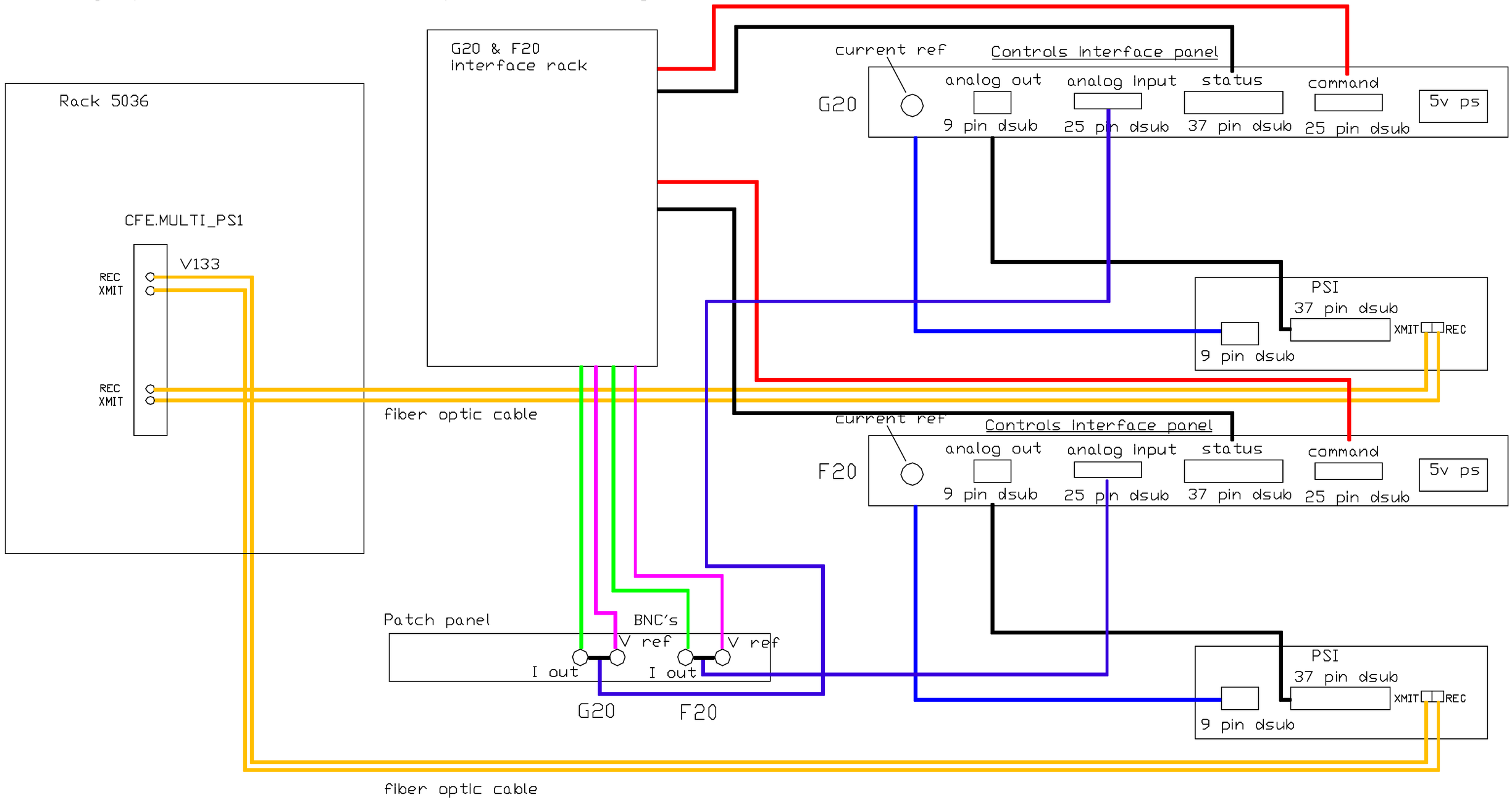

MULTIPOLE POWER SUPPLY
F20 & G20 BUMP

INTERPRET IN GENERAL ACCORDANCE WITH ASME Y14.24M-1989	Q.A. CATEGORY A-3	DATE	BROOKHAVEN NATIONAL LABORATORY ASSOCIATED UNIVERSITIES, INC. UPTON, N.Y. 11973		
UNLESS OTHERWISE SPECIFIED DIMENSIONS ARE IN INCHES	DRAWN BY Jappe	9/23/04	multipole room, block		
DECIMAL TOLERANCES .X ±.XX .XX ±.XX .XXX ±.XXX ANGULAR TOLERANCE ± XXX	CHECKED BY		F20 & G20		
	DESIGN APPROVAL				
	ENGINEER APPROVAL				
	SUPVR. APPROVAL				
NA FINISH	BREAK SHARP EDGES MAX. XX MIN. XX	NEXT ASSEMBLY	SIZE A	DRAWING NUMBER	REV. A
OUTSTANDING ECN			MATERIAL:	SCALE: NA	WEIGHT: - SHEET

*AUTOCAD