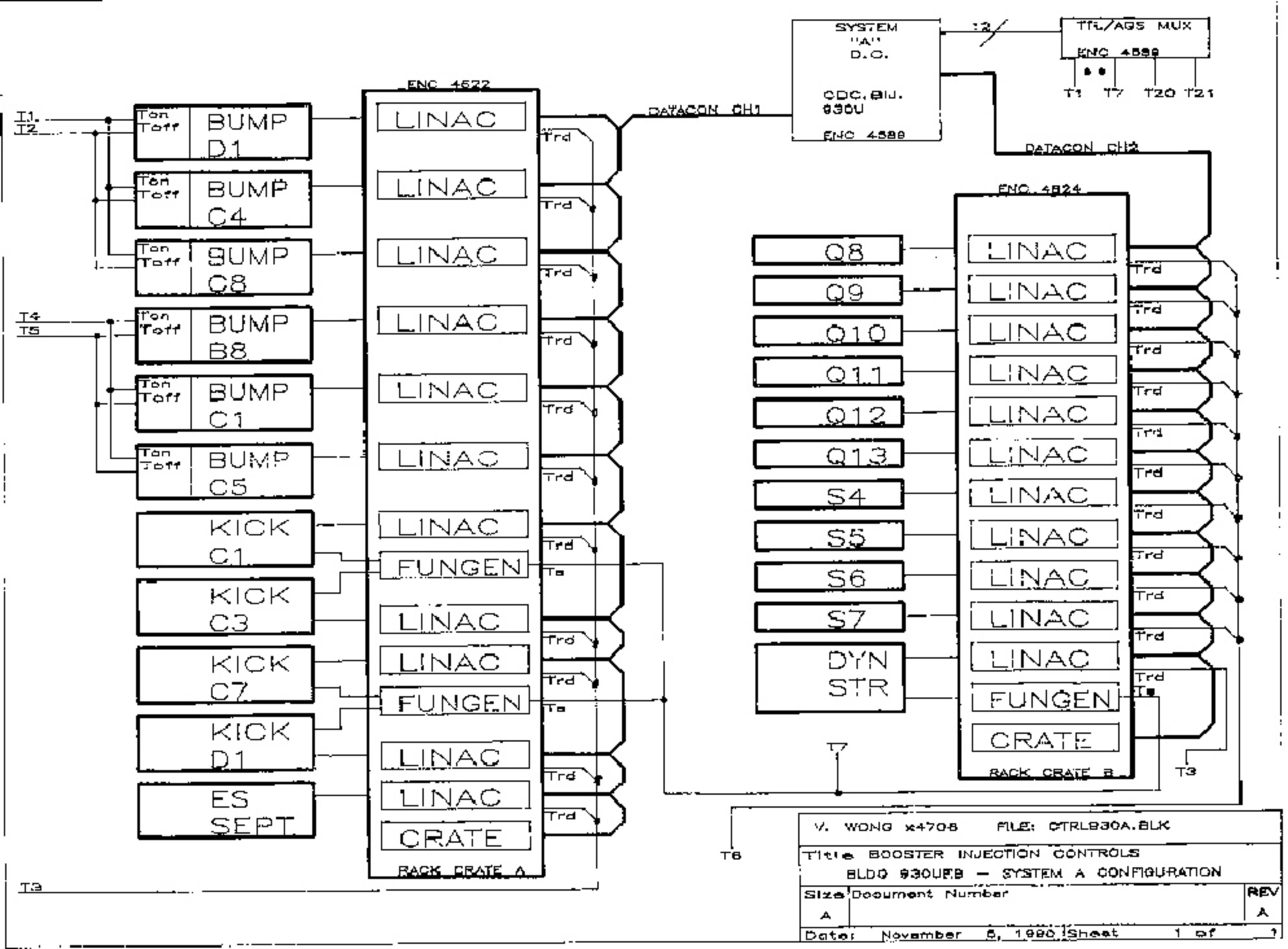


V. WONG x4708 FILE: CTRL930A.BLK

Title BOOSTER INJECTION CONTROLS
BLDG 930UFB — SYSTEM A CONFIGURATION

| Size | Document Number | REV |
|---|---|---|
| A | | A |

Date: November 5, 1990 Sheet 1 of 1

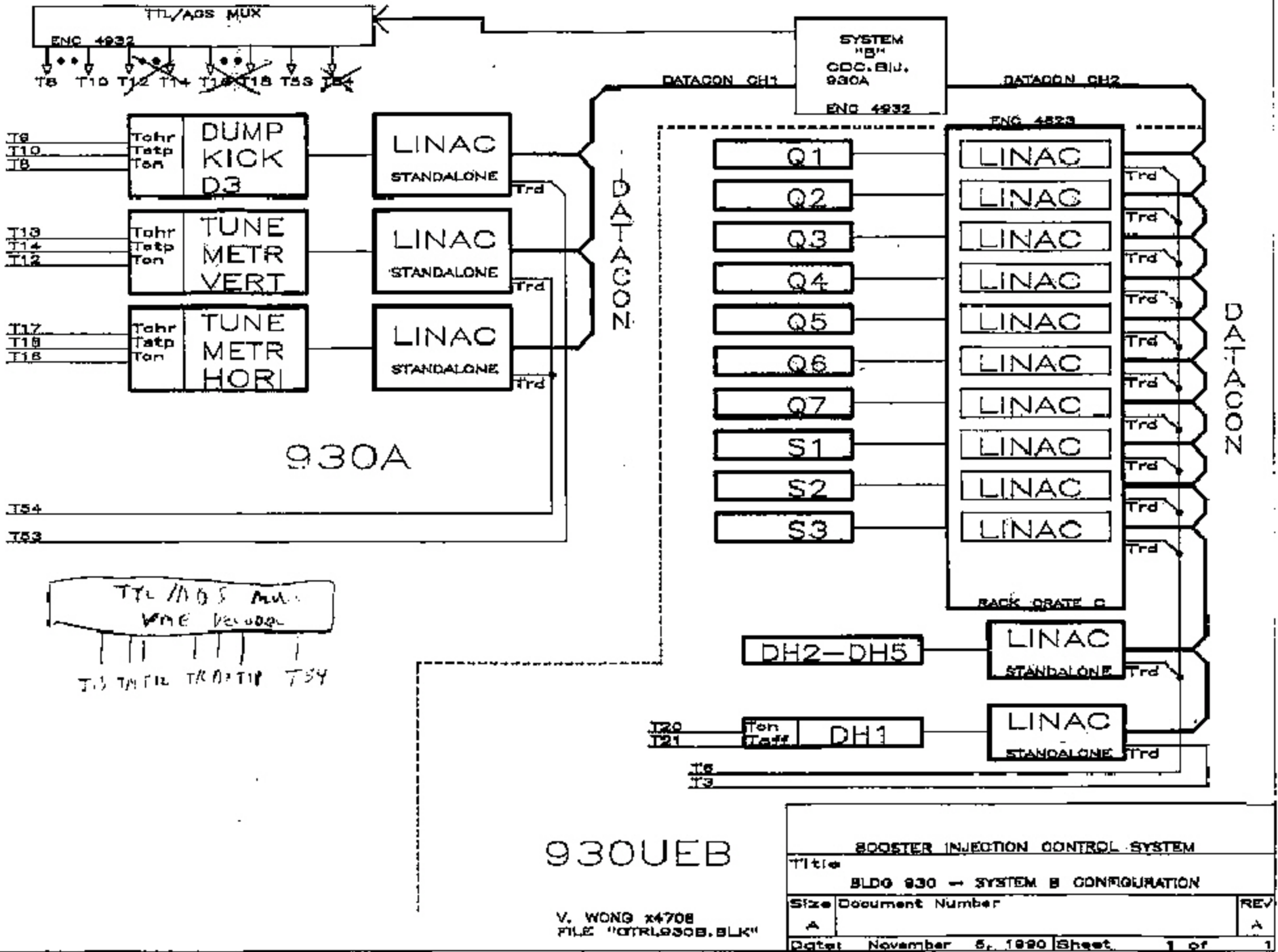
TTL/ACS MUX
ENC 4932
T8 T10 T12 T14 T16 T18 T53 T54
SYSTEM "B" CDC.BIU. 930A
ENC 4932
DATACON CH1
DATACON CH2
T9 T10 T8
Tohr Tstp Ton
DUMP KICK D3
LINAC STANDALONE
Trd
T13 T14 T12
TUNE METR VERT
T17 T18 T16
TUNE METR HORI
DATACON
930A
T54
T53
ENC 4929
Q1
Q2
Q3
Q4
Q5
Q6
Q7
S1
S2
S3
LINAC
BACK CRATE C
DH2—DH5
T20 T21
Ton Toff
DH1
T6 T3
930UEB
V. WONG x4708
FILE "CTRL930B.BLK"
BOOSTER INJECTION CONTROL SYSTEM
Title
BLDG 930 — SYSTEM B CONFIGURATION
Size A
Document Number
REV A
Date: November 5, 1990
Sheet 1 of 1