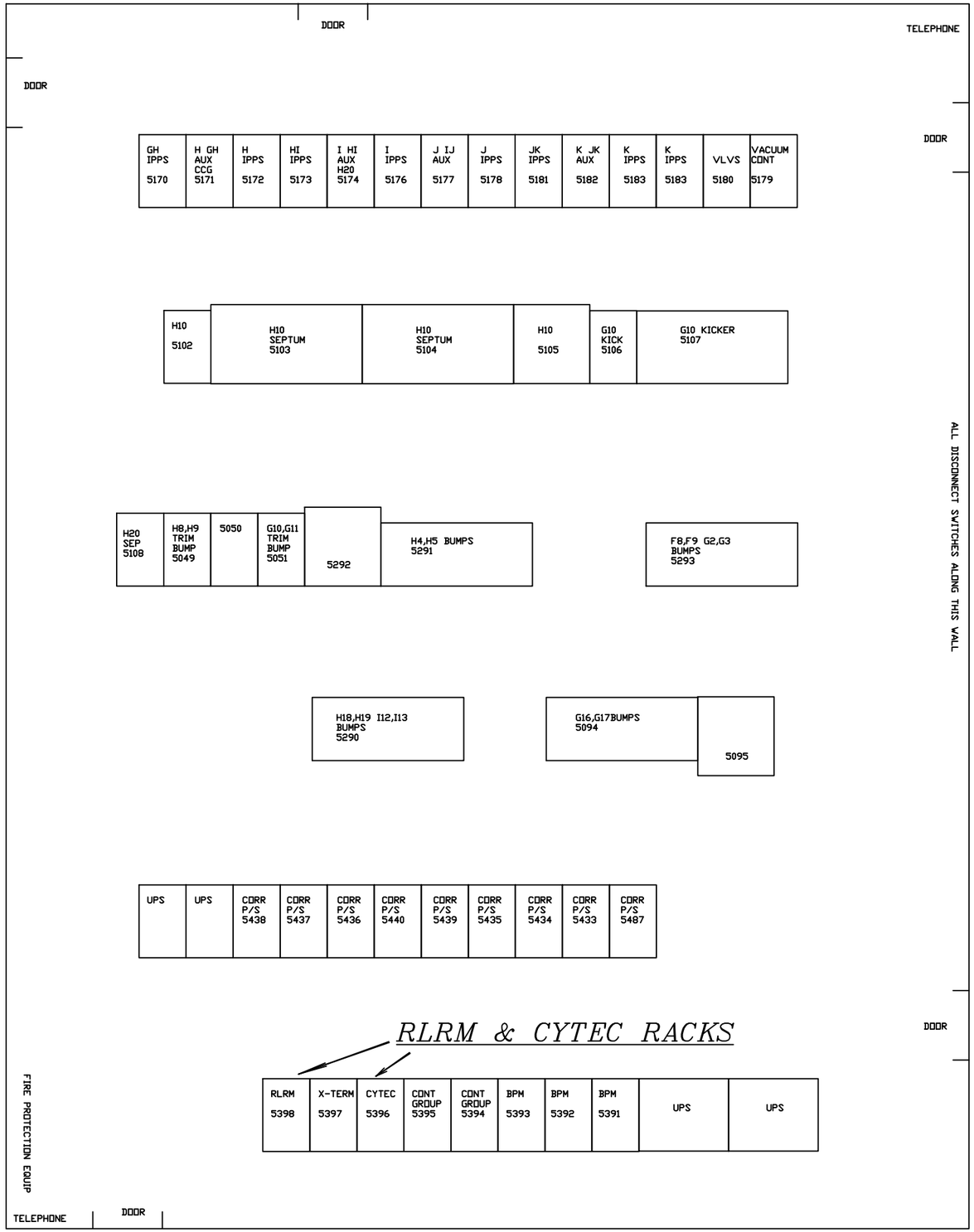

REV.	ZONE	ECN NO.	DATE	BY	CKR	APP.

C-A Controls 5/2/01 8:29 AM H10_BUILDING.dwg

-3	-2	-1	REF DESIGNATOR	ITEM NO.	DESCRIPTION	MAT'L. DWG NO.,BNL NO.
QTY REQD						

INTERPRET IN GENERAL ACCORDANCE WITH ASME Y14.24M-1989

UNLESS OTHERWISE SPECIFIED DIMENSIONS ARE IN INCHES

DECIMAL TOLERANCES
.X ±
.XX ±
.XXX ±
ANGULAR TOLERANCE ±

NA FINISH

BREAK SHARP EDGES MAX. XX MIN. XX

OUTSTANDING ECN

Q.A. CATEGORY		DATE
DRAWN BY	Warren Jappe	4/24/01
CHECKED BY		
DESIGN APPROVAL		
ENGINEER APPROVAL		
SUPVR. APPROVAL		

NEXT ASSEMBLY

BROOKHAVEN NATIONAL LABORATORY
UPTON, N.Y. 11973

H10 BUILDING LAYOUT

SIZE | DRAWING NUMBER | REV.

MATERIAL: | SCALE: | WEIGHT: | SHEET 2 of 5

*AUTOCAD

REV.	ZONE	ECN NO.	DATE	BY	CKR	APP.

C-A Controls 4/25/01 10:23 AM H10_RLRM_RACK.dwg

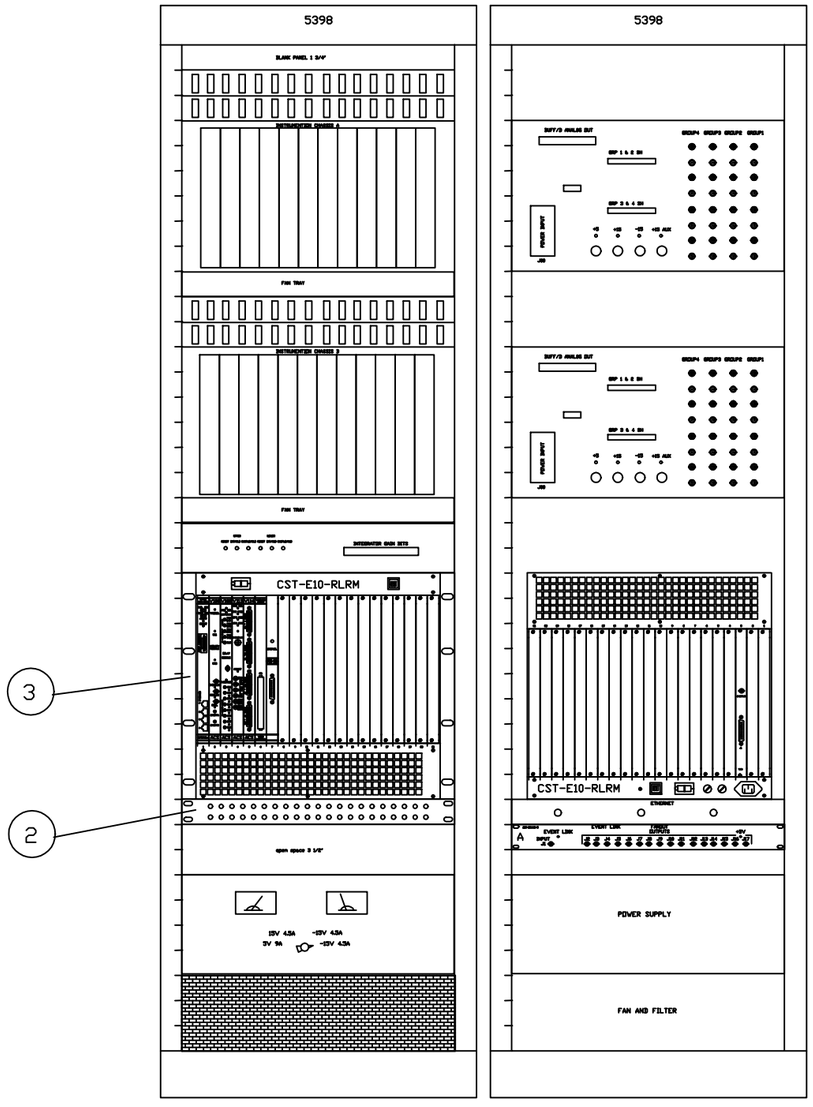

QTY REQD -3	QTY REQD -2	QTY REQD -1	REF DESIGNATOR	ITEM NO.	DESCRIPTION	MAT'L DWG NO.,BNL NO.
		1	X	8	MUX	D09-0E4286
		1	X	7	1 MHZ MUX	D09-0E4244
		2	X	6	TL FANOUTS	X
		1	X	3	VME 6U CHASSIS	X
		1	X	2	GROMMENT PANEL	X
		1	1	1	70" RACK	X

INTERPRET IN GENERAL ACCORDANCE WITH ASME Y14.24M-1989

UNLESS OTHERWISE SPECIFIED DIMENSIONS ARE IN INCHES

DECIMAL TOLERANCES
.X ±.030
.XX ±.015
.XXX ±.005
ANGULAR TOLERANCE ± .5°

FINISH NA

BREAK SHARP EDGES MAX. XX MIN. XX

OUTSTANDING ECN

Q.A. CATEGORY A-3

		DATE
DRAWN BY	Warren Jappe	4/23/01
CHECKED BY		
DESIGN APPROVAL		
ENGINEER APPROVAL		
SUPVR. APPROVAL		

NEXT ASSEMBLY

BROOKHAVEN NATIONAL LABORATORY
ASSOCIATED UNIVERSITIES, INC.
UPTON, N.Y. 11973

RACK LAYOUT FOR H10 RLRM
CONTROL SYSTEM

SIZE D | DRAWING NUMBER | REV. A

MATERIAL: ——— | SCALE: FULL | WEIGHT: – | SHEET 1

*AUTOCAD

REV.	ZONE	ECN NO.	DATE	BY	CKR	APP.

C-A Controls 5/1/01 9:23 AM H10_RLRM_CHAS.dwg

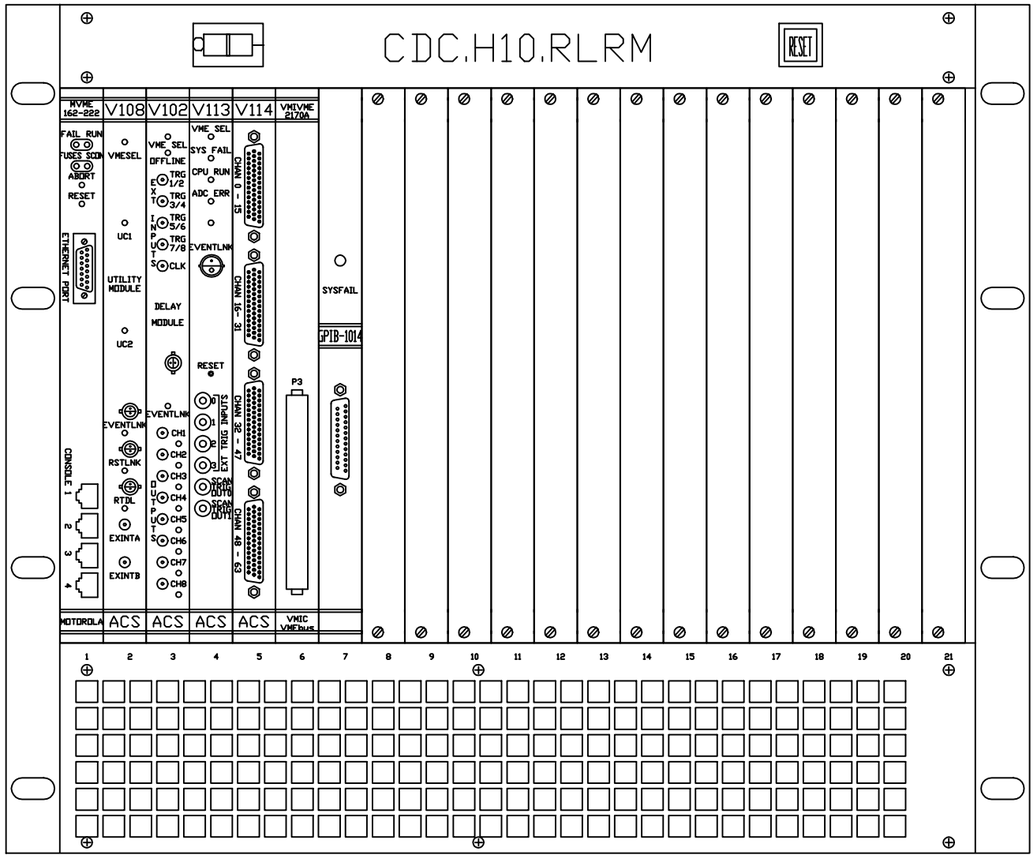

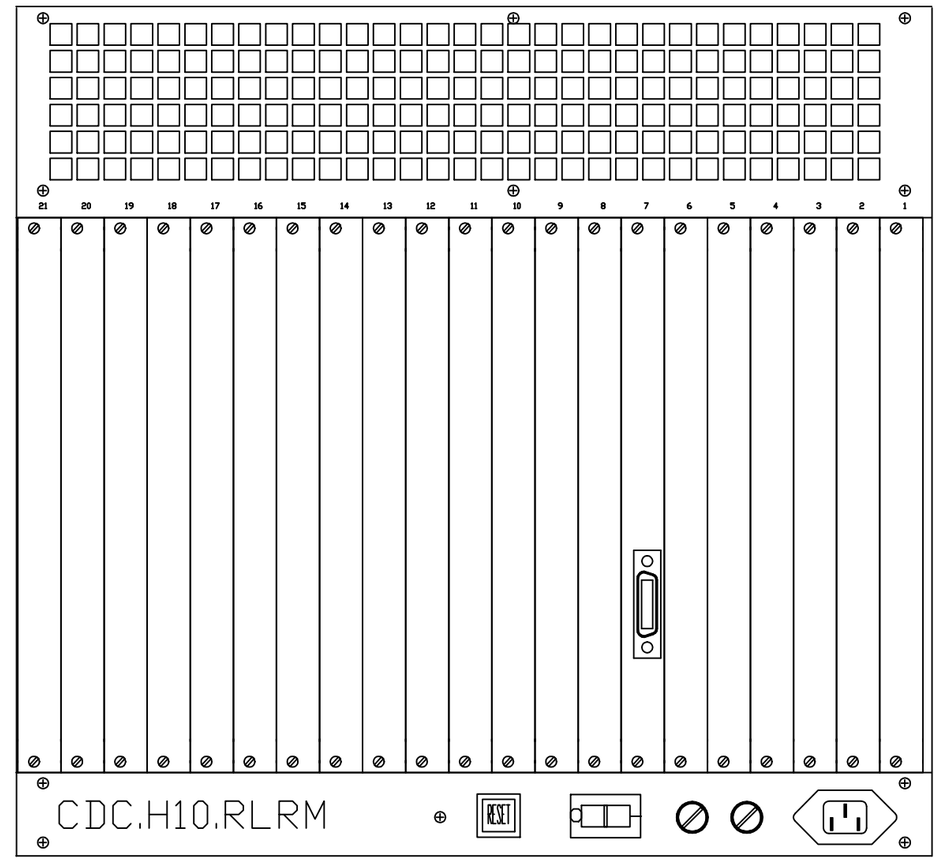

NOTE 1: FOR UNUSED SLOTS

-3	-2	-1	QTY REQD	REF DESIGNATOR	ITEM NO.	DESCRIPTION	MAT'L. DWG NO.,SPEC. NO.
		1		SLOT 5	10	V114 MADC	X
		1		SLOT 4	9	V113 MADC	
		38		NOTE 1	8	6U FILLER PANELS	X
		1		SLOT 7 R	7	GPIB TRANSITION MODULE	
		1		SLOT 6	6	VMIVME 2170A	
		1		slot 7	5	National Instruments 1014 (GPIB)	X
		1		SLOT 3	4	V102 DECODER MODULE	94028070
		1		SLOT 2	3	V108 UTILITY MODULE	94028094
		1		SLOT 1	2	FRONT END COMPUTER (162-222)	X
		1		N/A	1	6U VME CHASSIS	RHIC-93008000

INTERPRET IN GENERAL ACCORDANCE WITH ASME Y14.24M-1989

UNLESS OTHERWISE SPECIFIED DIMENSIONS ARE IN INCHES

DECIMAL TOLERANCES
.X ±.030
.XX ±.015
.XXX ±.005
ANGULAR TOLERANCE
± .5°

OUTSTANDING ECN

NA FINISH

BREAK SHARP EDGES
MAX. XX MIN. XX

Q.A. CATEGORY A-3

		DATE
DRAWN BY	JAPPE	4/23/01
CHECKED BY		
DESIGN APPROVAL		
ENGINEER APPROVAL		
SUPVR. APPROVAL		

NEXT ASSEMBLY

BROOKHAVEN NATIONAL LABORATORY
ASSOCIATED UNIVERSITIES, INC.
UPTON, N.Y. 11973

VME CONTROL CHASSIS

H10

SIZE D

DRAWING NUMBER

REV.

MATERIAL: SCALE: WEIGHT: SHEET 2

*AUTOCAD

REV.	ZONE	ECN NO.	DATE	BY	CKR	APP.

C-A Controls 4/25/01 3:46 PM H10_cpu.dwg

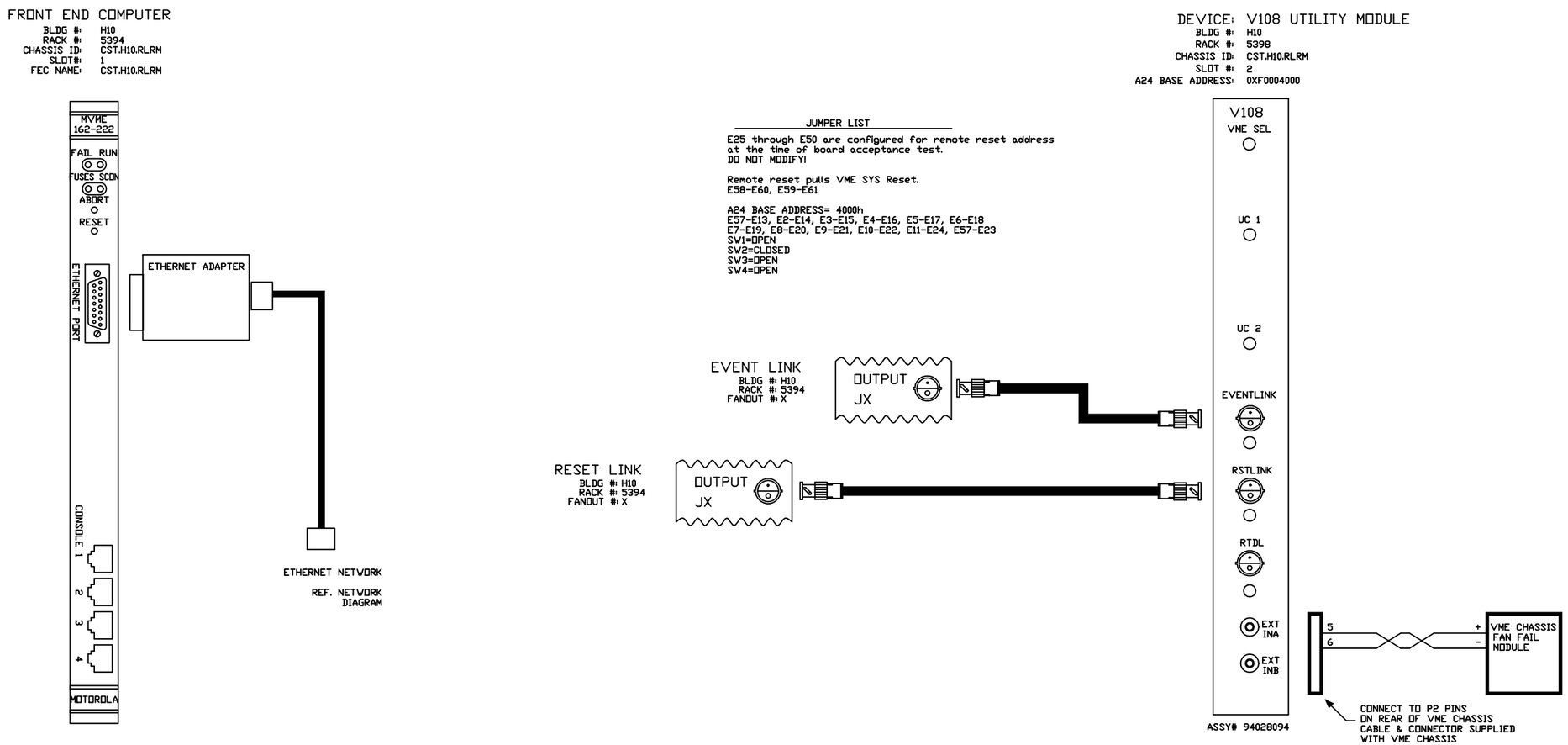

-3	-2	-1	REF DESIGNATOR	ITEM NO.	DESCRIPTION	MAT'L DWG NO./BNL NO.
QTY REQD						

INTERPRET IN GENERAL ACCORDANCE WITH ASME Y14.24M-1989

UNLESS OTHERWISE SPECIFIED DIMENSIONS ARE IN INCHES

DECIMAL TOLERANCES
.X ±.XX
.XX ±.XXX
.XXX ±.XXX
ANGULAR TOLERANCE
± XXX

OUTSTANDING ECN

NA FINISH

BREAK SHARP EDGES MAX. XX MIN. XX

Q.A. CATEGORY A-3

		DATE
DRAWN BY	Jappe	4/23/01
CHECKED BY		
DESIGN APPROVAL		
ENGINEER APPROVAL		
SUPVR. APPROVAL		

NEXT ASSEMBLY

BROOKHAVEN NATIONAL LABORATORY
ASSOCIATED UNIVERSITIES, INC.
UPTON, N.Y. 11973

CAD WIRING DIAGRAM

H10 RACK 5398

CPU/MEMORY /V108 UTIL MODULE

SIZE A | DRAWING NUMBER | REV. A

MATERIAL: ——— SCALE: NA WEIGHT: – SHEET

1 *AUTOCAD

C-A Controls 5/3/01 9:12 AM H10_RLRM_V102.dwg

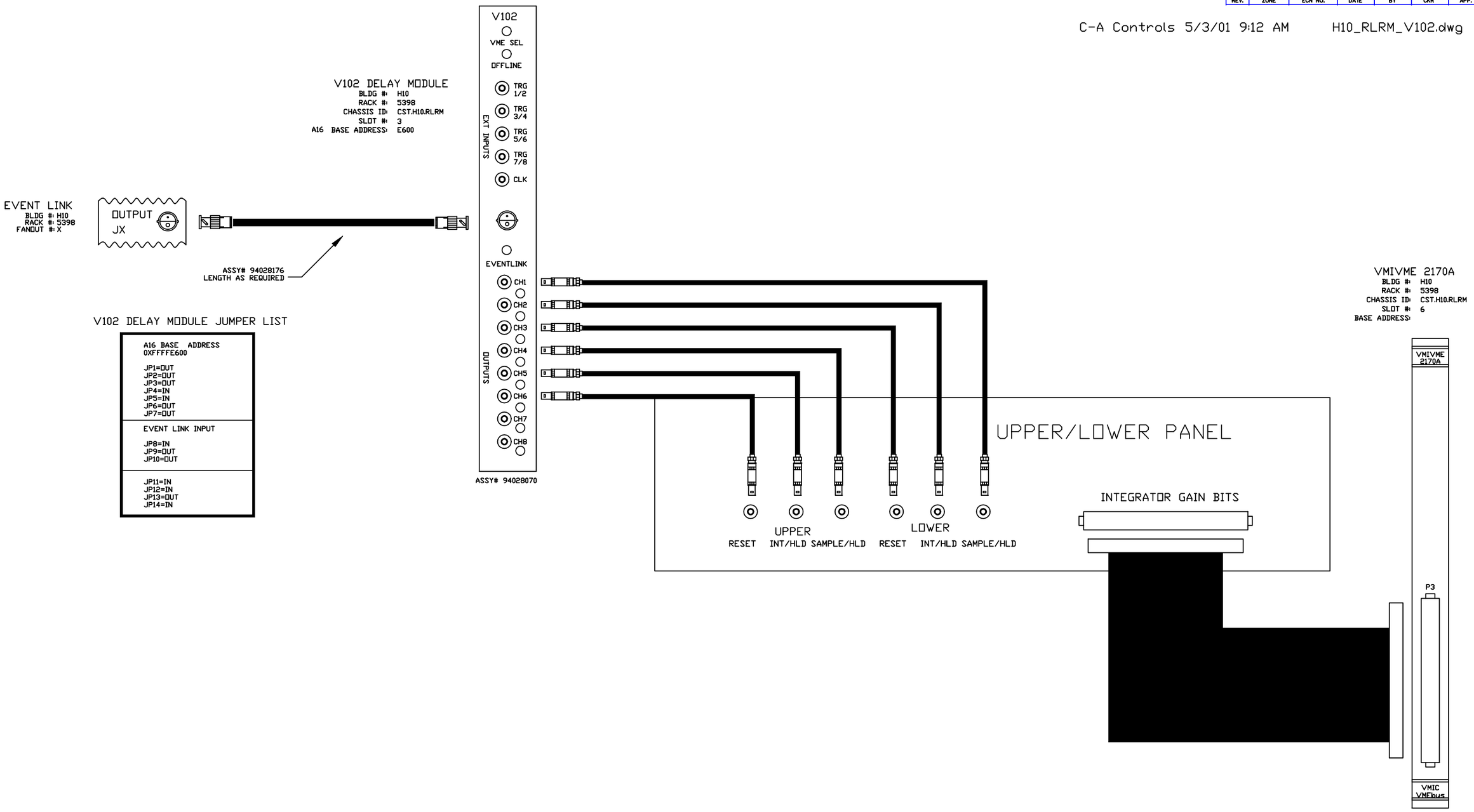

REV.	ZONE	ECN NO.	DATE	BY	CKR	APP.

-3	-2	-1	REF DESIGNATOR	ITEM NO.	DESCRIPTION	MAT'L DWG NO.,BNL NO.
QTY REQD						

INTERPRET IN GENERAL ACCORDANCE WITH ASME Y14.24M-1989

UNLESS OTHERWISE SPECIFIED DIMENSIONS ARE IN INCHES

DECIMAL TOLERANCES
.X ±XXX
.XX ±XXX
.XXX ±XXX
ANGULAR TOLERANCE
± XXX

NA FINISH

BREAK SHARP EDGES
MAX. XX MIN. XX

OUTSTANDING ECN

Q.A. CATEGORY A-3

		DATE
DRAWN BY	Warren Jappe	4/23/01
CHECKED BY		
DESIGN APPROVAL		
ENGINEER APPROVAL		
SUPVR. APPROVAL		

NEXT ASSEMBLY

BROOKHAVEN NATIONAL LABORATORY
UPTON, N.Y. 11973

CAD WIRING DIAGRAM

BLDG.H10 RACK 5398

V102 DELAY MODULE

SIZE A

DRAWING NUMBER

REV. A

MATERIAL: ——— SCALE: NA WEIGHT: SHEET

*AUTOCAD

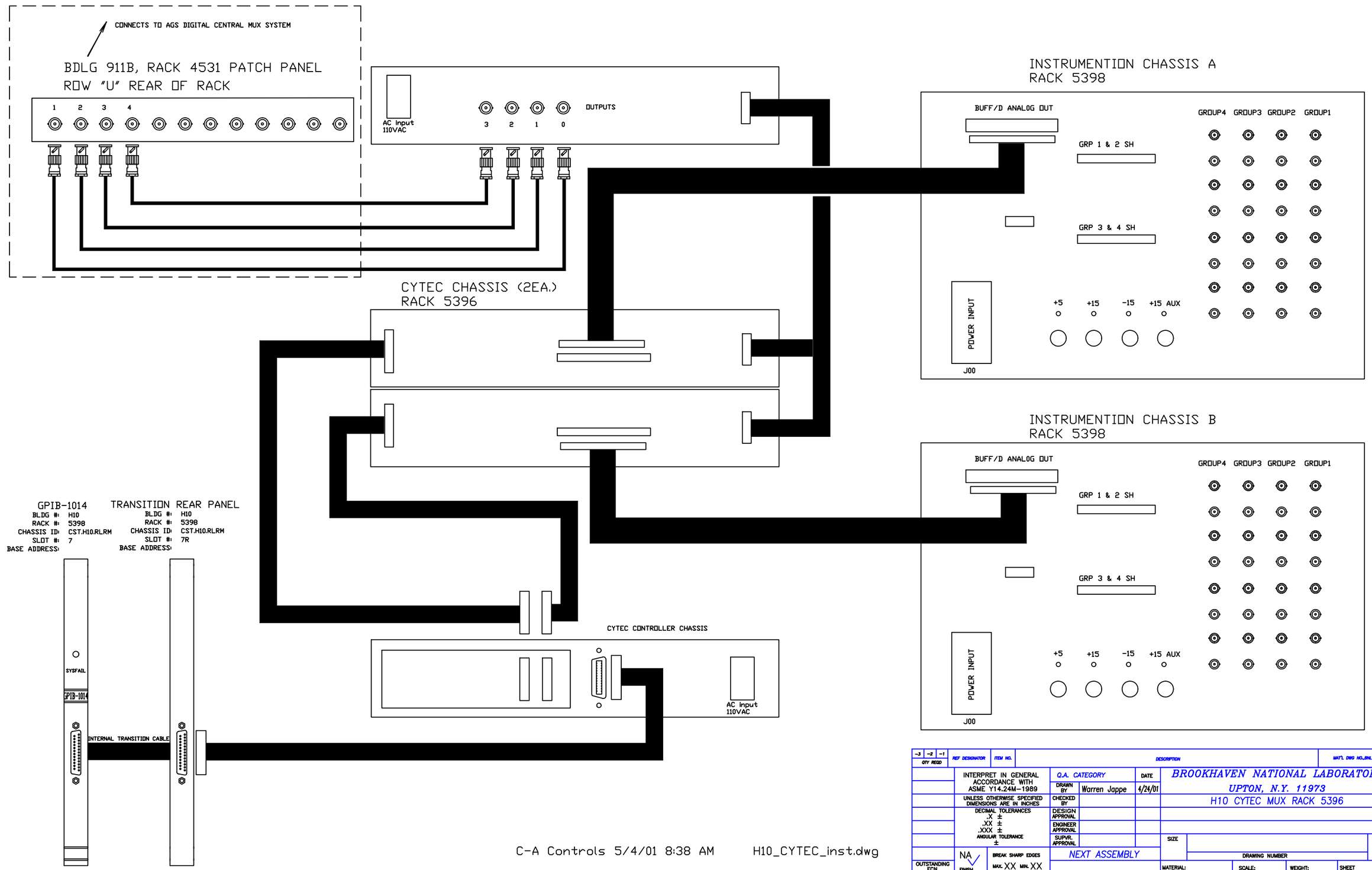

C-A Controls 5/4/01 8:38 AM H10_CYTEC_inst.dwg

REV.	ZONE	ECN NO.	DATE	BY	CKR	APP.

-3	-2	-1	REF DESIGNATOR	ITEM NO.	DESCRIPTION	MAT'L DWG NO./INL NO.
QTY REQD						

INTERPRET IN GENERAL ACCORDANCE WITH ASME Y14.24M-1989

UNLESS OTHERWISE SPECIFIED DIMENSIONS ARE IN INCHES

DECIMAL TOLERANCES
.X ±
.XX ±
.XXX ±
ANGULAR TOLERANCE
±

NA FINISH

BREAK SHARP EDGES
MAX. XX MIN. XX

OUTSTANDING ECN

Q.A. CATEGORY

		DATE
DRAWN BY	Warren Jappe	4/24/01
CHECKED BY		
DESIGN APPROVAL		
ENGINEER APPROVAL		
SUPVR. APPROVAL		

NEXT ASSEMBLY

BROOKHAVEN NATIONAL LABORATORY
UPTON, N.Y. 11973

H10 CYTEC MUX RACK 5396

SIZE | REV.
DRAWING NUMBER
MATERIAL: | SCALE: | WEIGHT: | SHEET

1 *AUTOCAD

C-A Controls 4/27/01 4:26 PM H10_RLRM_MADC.dwg

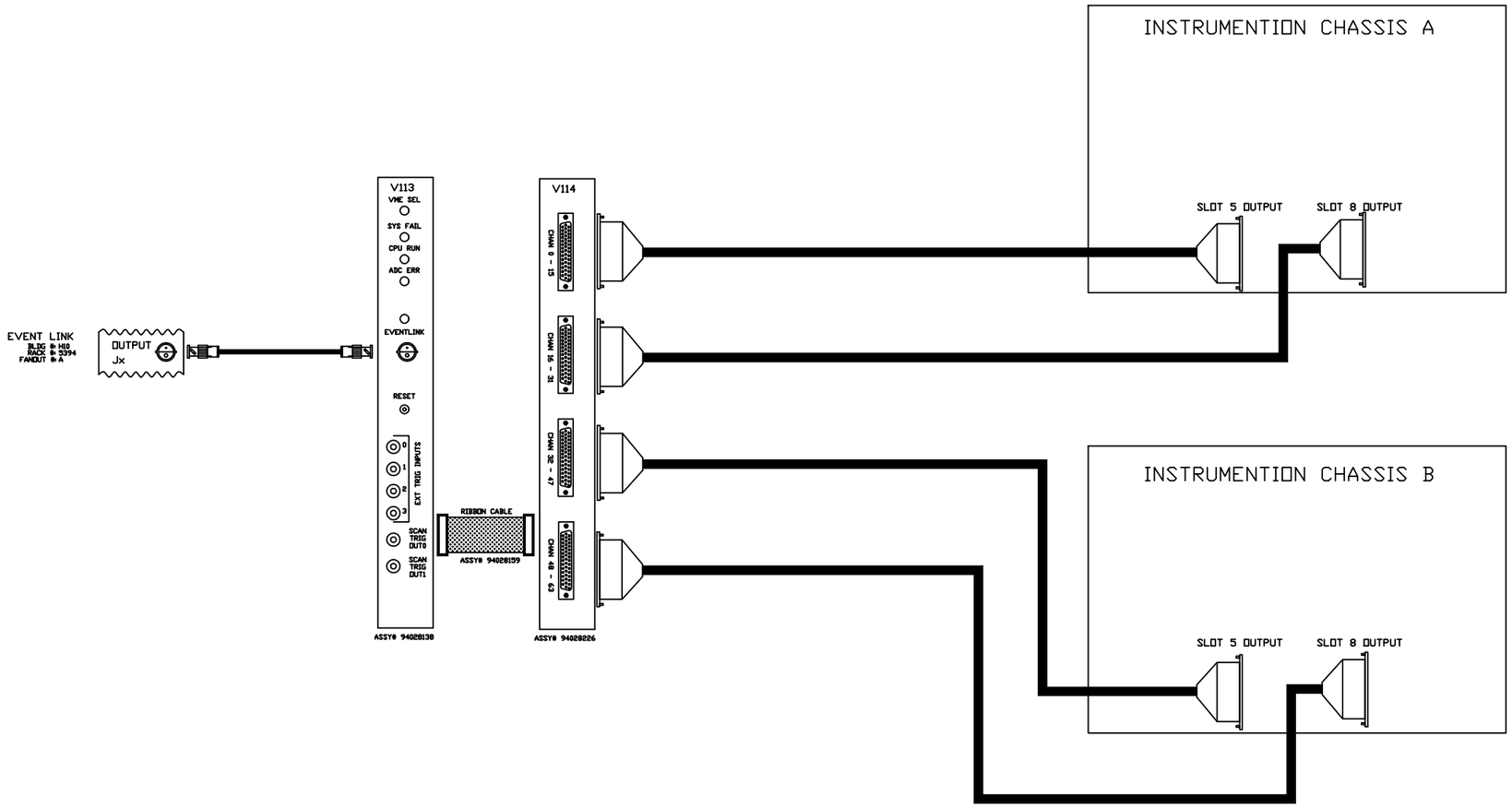

-3	-2	-1	REF DESIGNATOR	ITEM NO.	DESCRIPTION	MAT'L DWG NO./BAL NO.
QTY REQD						

INTERPRET IN GENERAL ACCORDANCE WITH ASME Y14.24M-1989

UNLESS OTHERWISE SPECIFIED DIMENSIONS ARE IN INCHES

DECIMAL TOLERANCES
.X ±
.XX ±
.XXX ±
ANGULAR TOLERANCE
±

NA FINISH

BREAK SHARP EDGES
MAX. XX MIN. XX

OUTSTANDING ECN

Q.A. CATEGORY		DATE
DRAWN BY	Warren Jappe	4/23/01
CHECKED BY		
DESIGN APPROVAL		
ENGINEER APPROVAL		
SUPVR. APPROVAL		

NEXT ASSEMBLY

BROOKHAVEN NATIONAL LABORATORY
UPTON, N.Y. 11973

AGS CONTROLS WIRING DIAGRAM
BLDG.H10, CST.H10.RLRM
MADC

SIZE A | DRAWING NUMBER | REV.

MATERIAL: N/A | SCALE: NA | WEIGHT: | SHEET

*AUTOCAD

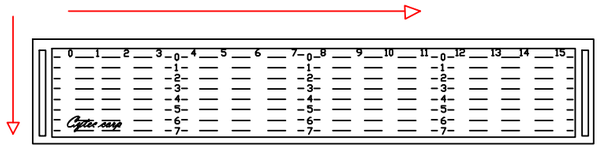

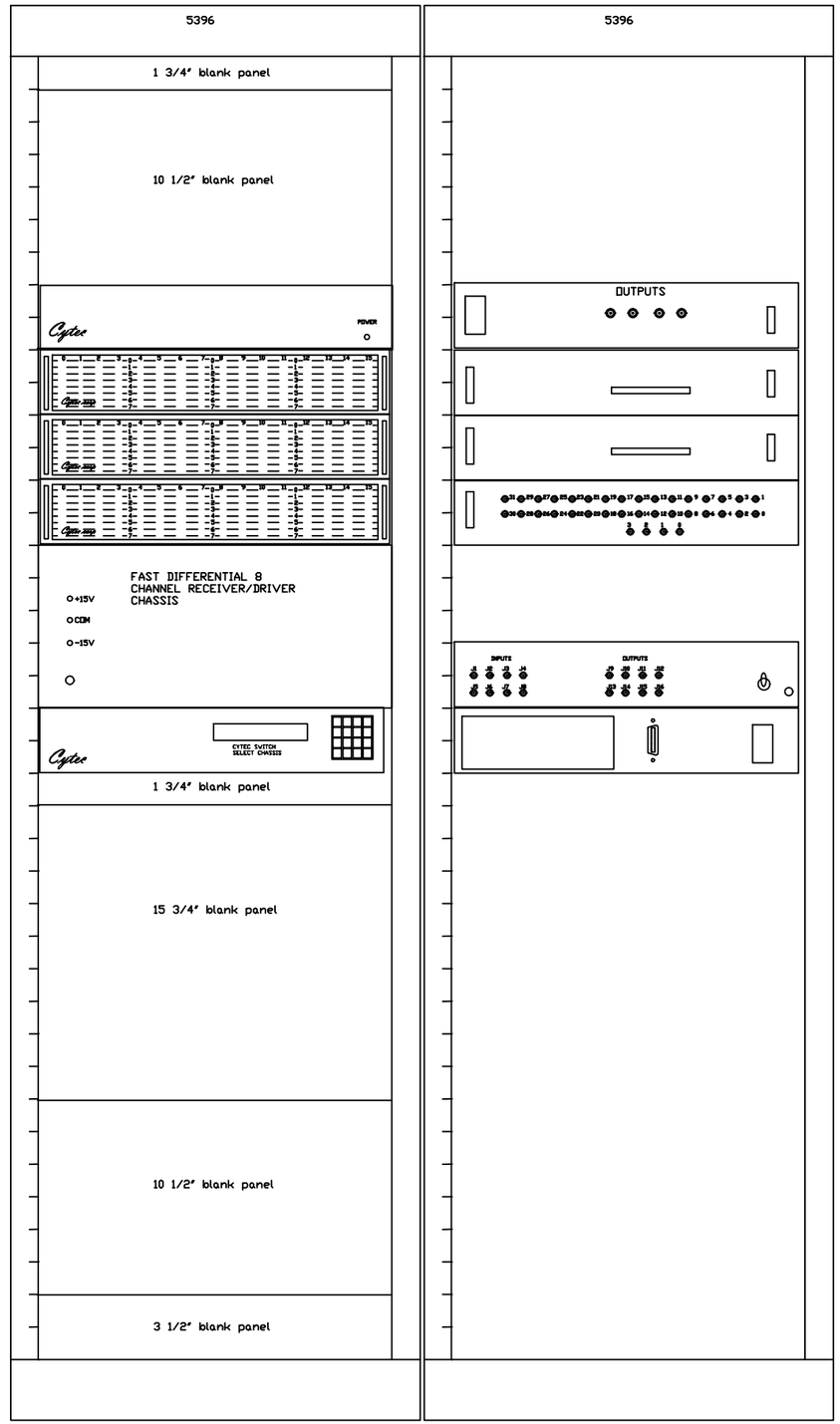

C-A Controls 5/1/01 3:44 PM H10_CYTEC_RACK.dwg

-3	-2	-1	REF DESIGNATOR	ITEM NO.	DESCRIPTION	MAT'L. DWG NO.,DIM. NO.
QTY REQD						

INTERPRET IN GENERAL ACCORDANCE WITH ASME Y14.24M-1989

UNLESS OTHERWISE SPECIFIED DIMENSIONS ARE IN INCHES

DECIMAL TOLERANCES
X ±
.XX ±
.XXX ±
ANGULAR TOLERANCE
±

NA FINISH

BREAK SHARP EDGES
MAX. XX MIN. XX

OUTSTANDING ECN

Q.A. CATEGORY		DATE
DRAWN BY	Warren Jappe	4/24/01
CHECKED BY		
DESIGN APPROVAL		
ENGINEER APPROVAL		
SUPVR. APPROVAL		

NEXT ASSEMBLY

BROOKHAVEN NATIONAL LABORATORY
UPTON, N.Y. 11973

H10 CYTEC MUX RACK 5396

SIZE | DRAWING NUMBER | REV.

MATERIAL: | SCALE: | WEIGHT: | SHEET 2 of 5

*AUTOCAD