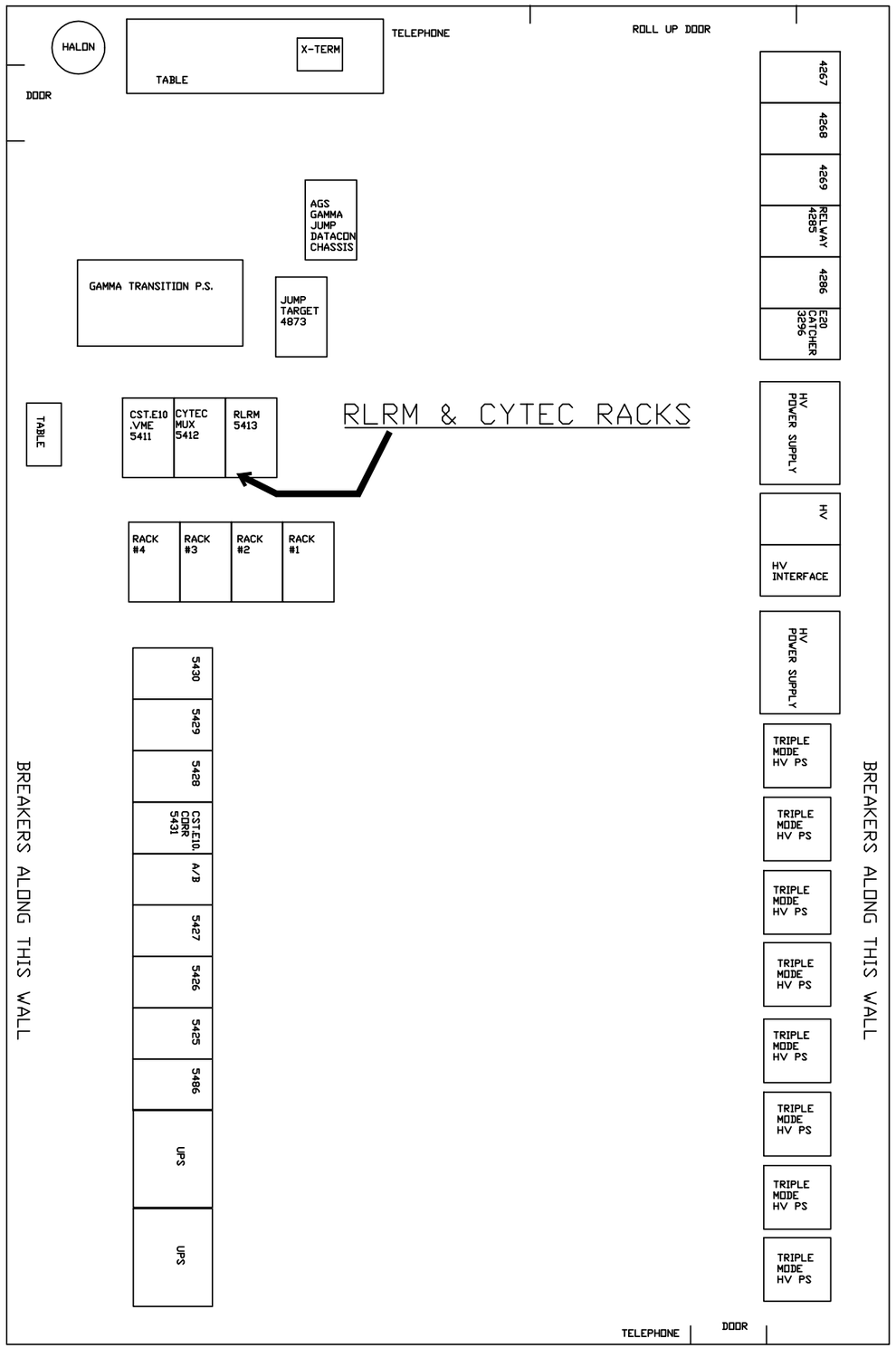

C-A Controls 5/3/01 8:22 AM E10_BUILDING.dwg

REV.	ZONE	ECN NO.	DATE	BY	CKR	APP.

-3	-2	-1	REF DESIGNATOR	ITEM NO.	DESCRIPTION	MAT'L DWG NO./INL NO.
QTY REQD						

INTERPRET IN GENERAL ACCORDANCE WITH ASME Y14.24M-1989

UNLESS OTHERWISE SPECIFIED DIMENSIONS ARE IN INCHES

DECIMAL TOLERANCES
.X ±
.XX ±
.XXX ±
ANGULAR TOLERANCE ±

NA FINISH

BREAK SHARP EDGES MAX. XX MIN. XX

OUTSTANDING ECN

Q.A. CATEGORY		DATE
DRAWN BY	Warren Jappe	4/24/01
CHECKED BY		
DESIGN APPROVAL		
ENGINEER APPROVAL		
SUPVR. APPROVAL		

NEXT ASSEMBLY

BROOKHAVEN NATIONAL LABORATORY
UPTON, N.Y. 11973

E10 BUILDING LAYOUT

SIZE | REV.
DRAWING NUMBER
MATERIAL: | SCALE: | WEIGHT: | SHEET 2 of 5

*AUTOCAD

REV.	ZONE	ECN NO.	DATE	BY	CKR	APP.

C-A Controls 4/25/01 9:41 AM A10_RLRM_RACK.dwg

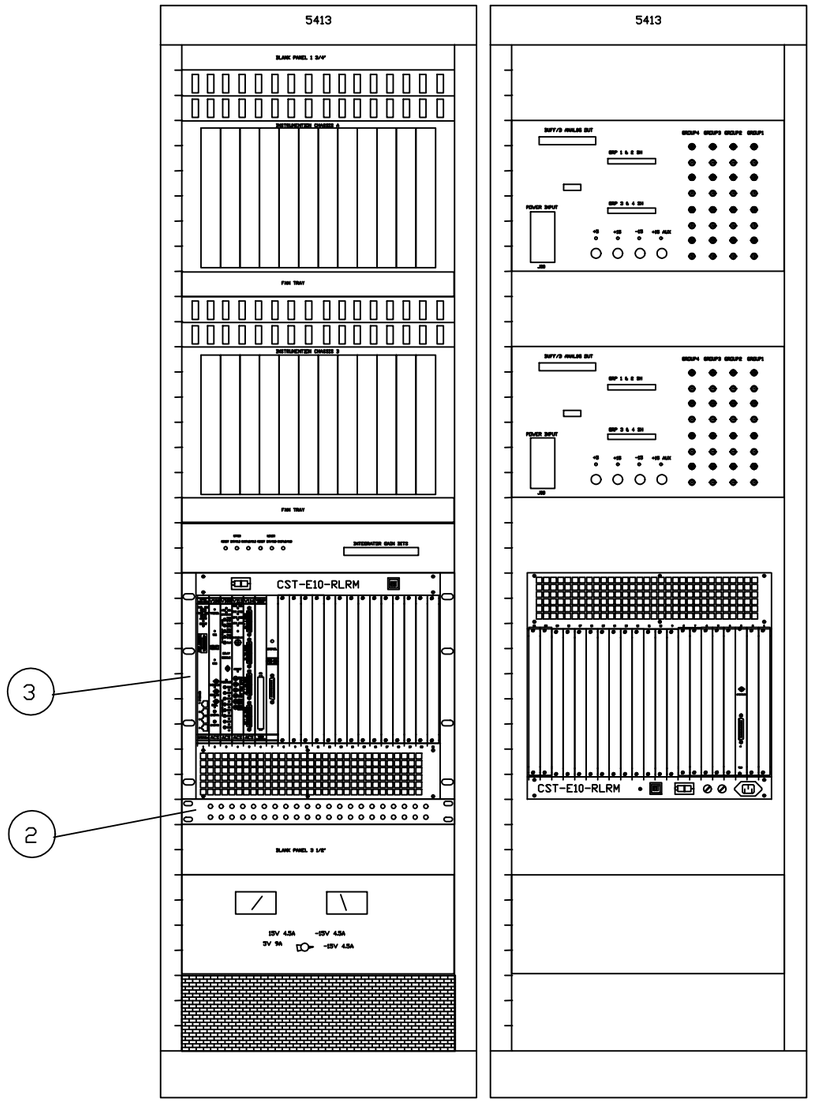

-3	-2	-1	REF DESIGNATOR	ITEM NO.	DESCRIPTION	MAT'L DWG NO.,DIML NO.
		1	X	8	MUX	D09-0E4286
		1	X	7	1 MHZ MUX	D09-0E4244
		2	X	6	TL FANOUTS	X
		1	X	3	VME 6U CHASSIS	X
		1	X	2	GROMMENT PANEL	X
		1	1	1	70" RACK	X

QTY REQD

INTERPRET IN GENERAL ACCORDANCE WITH ASME Y14.24M-1989

UNLESS OTHERWISE SPECIFIED DIMENSIONS ARE IN INCHES

DECIMAL TOLERANCES
.X ±.030
.XX ±.015
.XXX ±.005
ANGULAR TOLERANCE ± .5°

NA FINISH

BREAK SHARP EDGES MAX. XX MIN. XX

OUTSTANDING ECN

Q.A. CATEGORY A-3

		DATE
DRAWN BY	Warren Jappe	4/23/01
CHECKED BY		
DESIGN APPROVAL		
ENGINEER APPROVAL		
SUPVR. APPROVAL		

NEXT ASSEMBLY

BROOKHAVEN NATIONAL LABORATORY
ASSOCIATED UNIVERSITIES, INC.
UPTON, N.Y. 11973

RACK LAYOUT FOR E10 RLRM
CONTROL SYSTEM

SIZE D | DRAWING NUMBER | REV. A

MATERIAL: ——— | SCALE: FULL | WEIGHT: – | SHEET 1

*AUTOCAD

REV.	ZONE	ECN NO.	DATE	BY	CKR	APP.

C-A Controls 4/23/01 2:55 PM E10_RLRM_CHAS.dwg

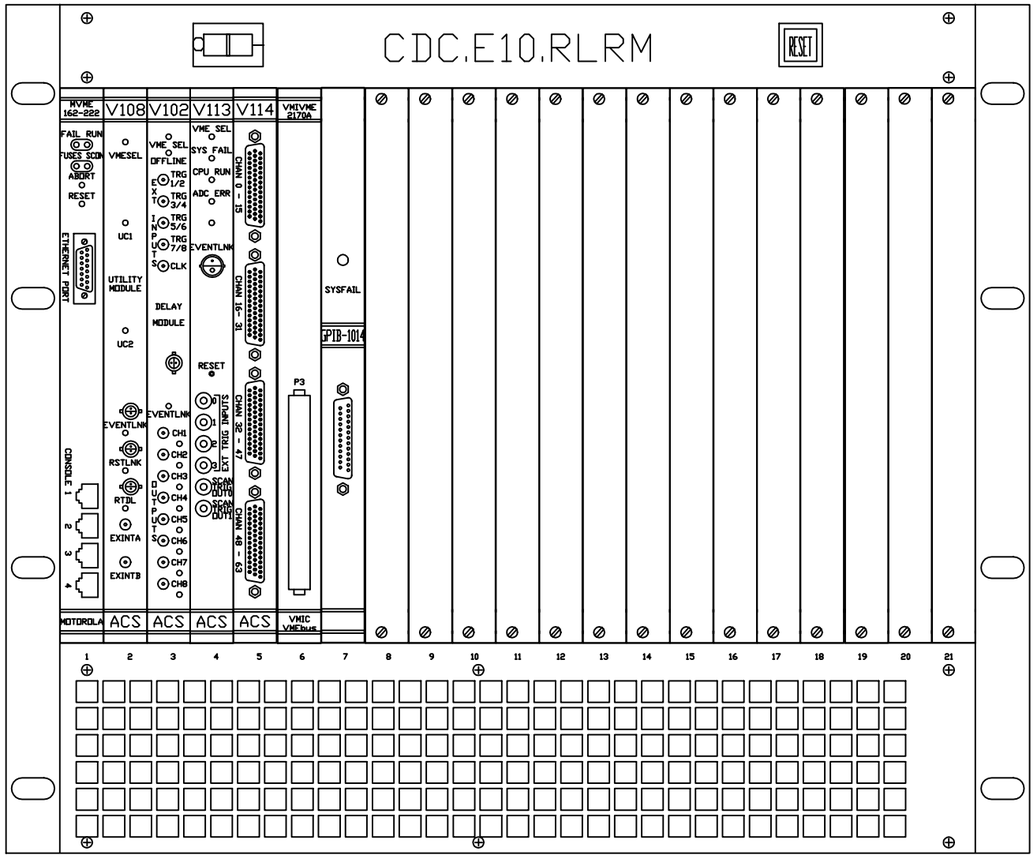

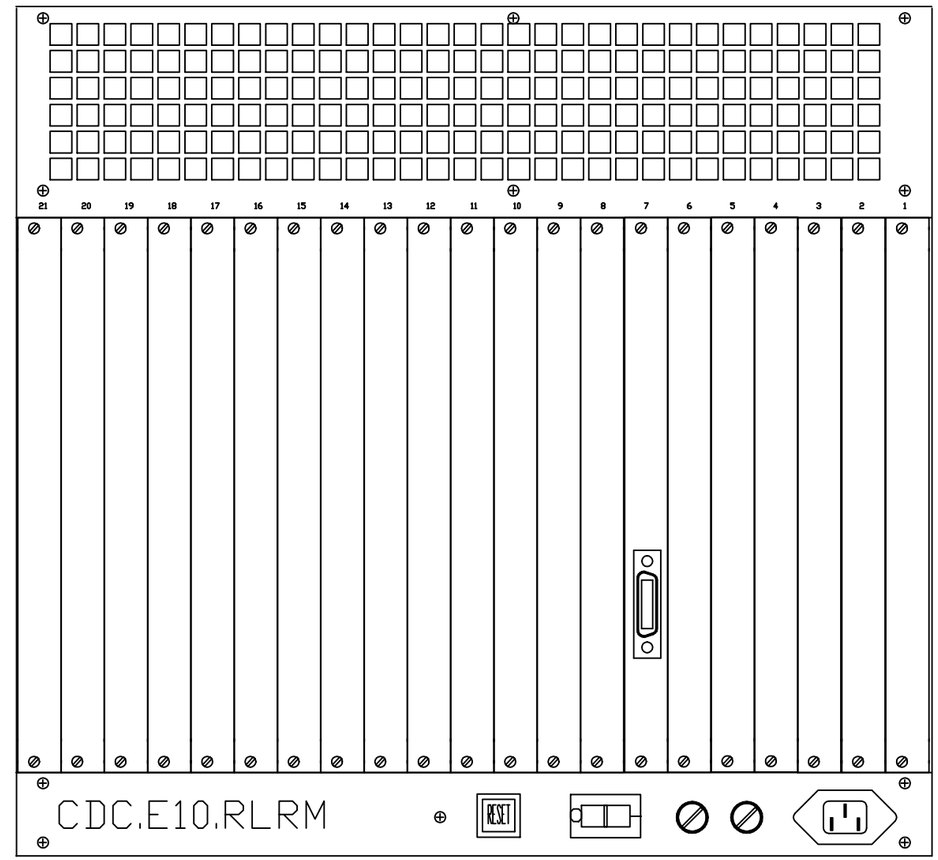

NOTE 1: FOR UNUSED SLOTS

-3	-2	-1	REF DESIGNATOR	ITEM NO.	DESCRIPTION	MAT'L. DWG NO.,BNL NO.
		1	SLOT 5	10	V114 MADC	X
		1	SLOT 4	9	V113 MADC	
		38	NOTE 1	8	6U FILLER PANELS	X
		1	SLOT 7 R	7	GPIB TRANSITION MODULE	
		1	SLOT 6	6	VMIVME 2170A	
		1	slot 7	5	National Instruments 1014 (GPIB)	X
		1	SLOT 3	4	V102 DECODER MODULE	94028070
		1	SLOT 2	3	V108 UTILITY MODULE	94028094
		1	SLOT 1	2	FRONT END COMPUTER (162-222)	X
		1	N/A	1	6U VME CHASSIS	RHIC-93008000

QTY REQD

INTERPRET IN GENERAL ACCORDANCE WITH ASME Y14.24M-1989

UNLESS OTHERWISE SPECIFIED DIMENSIONS ARE IN INCHES

DECIMAL TOLERANCES
.X ±.030
.XX ±.015
.XXX ±.005
ANGULAR TOLERANCE
± .5°

OUTSTANDING ECN

NA FINISH

BREAK SHARP EDGES MAX. XX MIN. XX

Q.A. CATEGORY A-3

		DATE
DRAWN BY	JAPPE	4/23/01
CHECKED BY		
DESIGN APPROVAL		
ENGINEER APPROVAL		
SUPVR. APPROVAL		

NEXT ASSEMBLY

BROOKHAVEN NATIONAL LABORATORY
ASSOCIATED UNIVERSITIES, INC.
UPTON, N.Y. 11973

VME CONTROL CHASSIS

E10

SIZE D

DRAWING NUMBER

REV.

MATERIAL: SCALE: WEIGHT: SHEET 2

*AUTOCAD

REV.	ZONE	ECN NO.	DATE	BY	CKR	APP.

C-A Controls 4/24/01 11:02 AM E10_cpu.dwg

FRONT END COMPUTER

BLDG #: E10
RACK #: 5413
CHASSIS ID: CST.E10.RLRM
SLOT#: 1
FEC NAME: CST.E10.RLRM

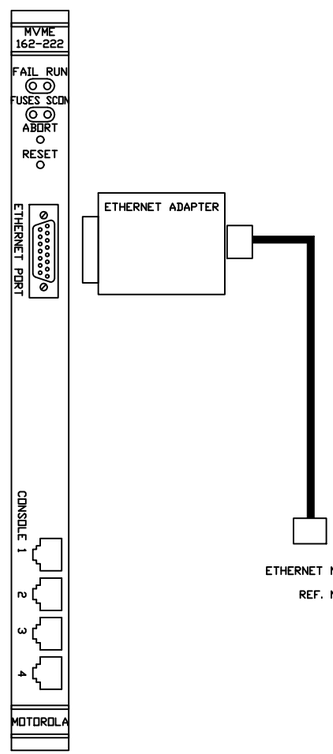

JUMPER LIST

E25 through E50 are configured for remote reset address at the time of board acceptance test.
DO NOT MODIFY!

Remote reset pulls VME SYS Reset.
E58-E60, E59-E61

A24 BASE ADDRESS= 4000h
E57-E13, E2-E14, E3-E15, E4-E16, E5-E17, E6-E18
E7-E19, E8-E20, E9-E21, E10-E22, E11-E24, E57-E23
SW1=OPEN
SW2=CLOSED
SW3=OPEN
SW4=OPEN

DEVICE: V108 UTILITY MODULE

BLDG #: E10
RACK #: 5413
CHASSIS ID: CST.E10.RLRM
SLOT #: 2
A24 BASE ADDRESS: 0XF0004000

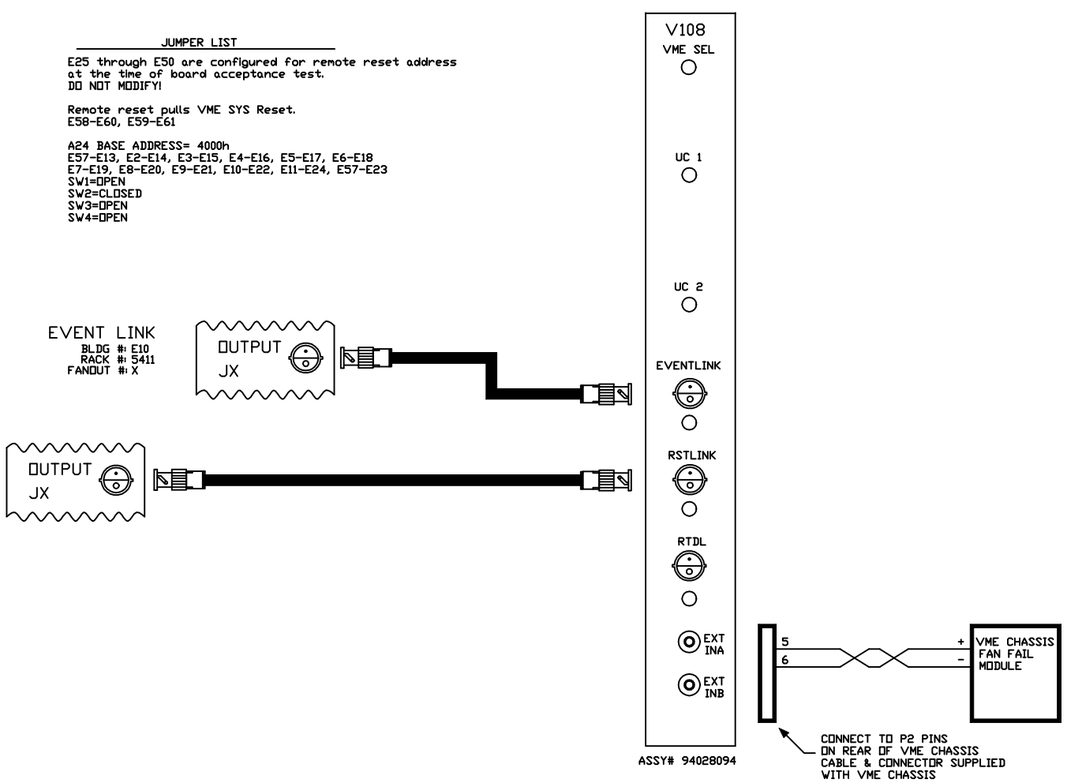

-3	-2	-1	REF DESIGNATOR	ITEM NO.	DESCRIPTION	MAT'L DWG NO./INL NO.
QTY REQD						

INTERPRET IN GENERAL ACCORDANCE WITH ASME Y14.24M-1989

UNLESS OTHERWISE SPECIFIED DIMENSIONS ARE IN INCHES

DECIMAL TOLERANCES
.X ±XXX
.XX ±XXX
.XXX ±XXX
ANGULAR TOLERANCE
± XXX

OUTSTANDING ECN

NA FINISH

BREAK SHARP EDGES
MAX. XX MIN. XX

Q.A. CATEGORY A-3

		DATE
DRAWN BY	Jappe	4/23/01
CHECKED BY		
DESIGN APPROVAL		
ENGINEER APPROVAL		
SUPVR. APPROVAL		

NEXT ASSEMBLY

BROOKHAVEN NATIONAL LABORATORY
ASSOCIATED UNIVERSITIES, INC.
UPTON, N.Y. 11973

CAD WIRING DIAGRAM

E10 RACK 5413

CPU/MEMORY /V108 UTIL MODULE

SIZE A | DRAWING NUMBER | REV. A

MATERIAL: ——— SCALE: NA WEIGHT: - SHEET

1 *AUTOCAD

C-A Controls 4/24/01 11:13 AM E10_RLRM_V102.dwg

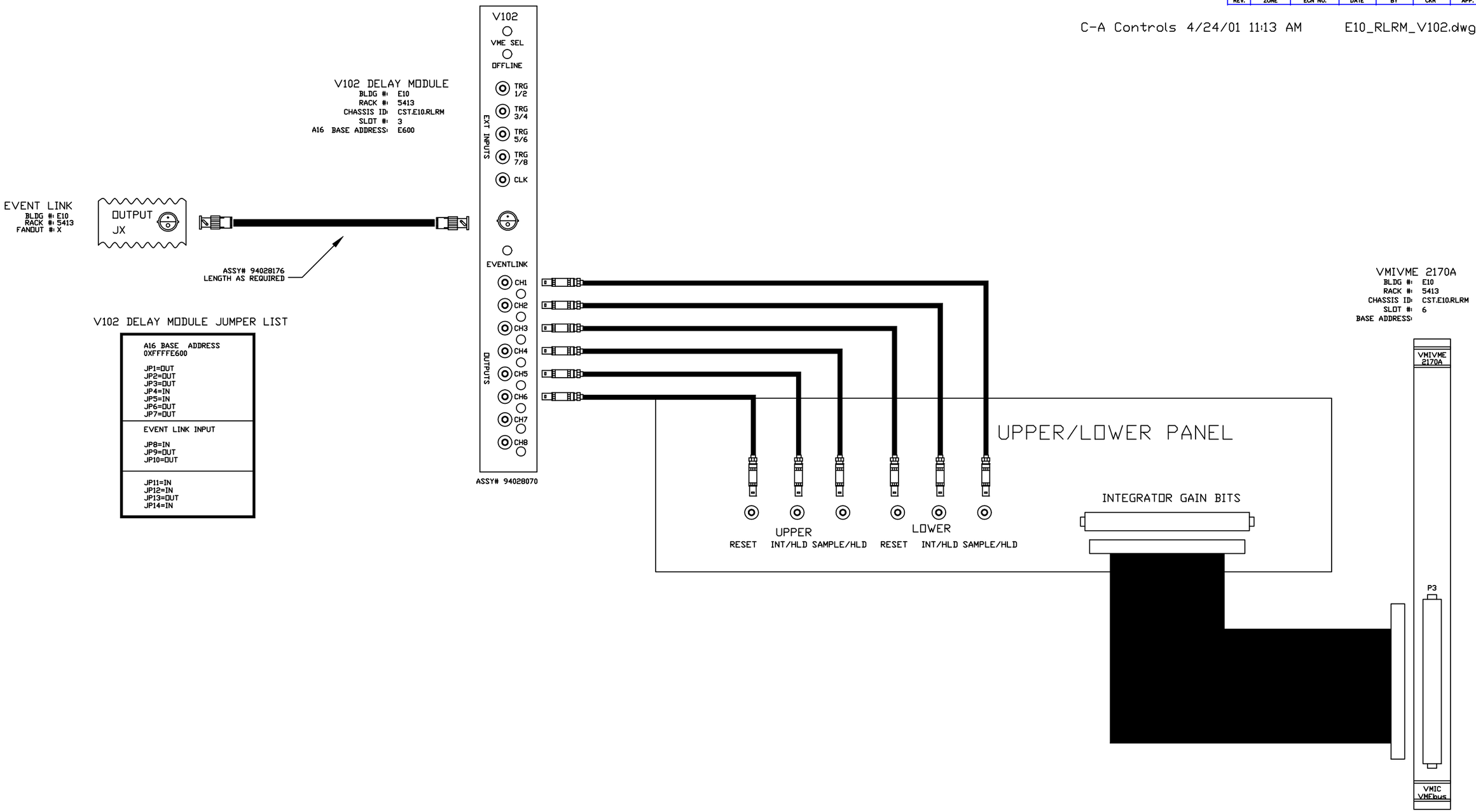

V102 DELAY MODULE JUMPER LIST

A16 BASE ADDRESS 0XFFFFE600 JP1=OUT JP2=OUT JP3=OUT JP4=IN JP5=IN JP6=OUT JP7=OUT
EVENT LINK INPUT JP8=IN JP9=OUT JP10=OUT
JP11=IN JP12=IN JP13=OUT JP14=IN

REV.	ZONE	ECN NO.	DATE	BY	CKR	APP.

-3	-2	-1	REF DESIGNATOR	ITEM NO.	DESCRIPTION	MAT'L DWG NO.,BNL NO.
QTY REQD						

INTERPRET IN GENERAL ACCORDANCE WITH ASME Y14.24M-1989

UNLESS OTHERWISE SPECIFIED DIMENSIONS ARE IN INCHES

DECIMAL TOLERANCES
.X ±XXX
.XX ±XXX
.XXX ±XXX
ANGULAR TOLERANCE
± XXX

OUTSTANDING ECN

NA FINISH

BREAK SHARP EDGES
MAX. XX MIN. XX

Q.A. CATEGORY A-3		DATE
DRAWN BY	Warren Jappe	4/23/01
CHECKED BY		
DESIGN APPROVAL		
ENGINEER APPROVAL		
SUPVR. APPROVAL		

NEXT ASSEMBLY

BROOKHAVEN NATIONAL LABORATORY
UPTON, N.Y. 11973

CAD WIRING DIAGRAM
BLDG.E10 RACK 5413
V102 DELAY MODULE

SIZE A | DRAWING NUMBER | REV. A

MATERIAL: ——— SCALE: NA WEIGHT: SHEET

*AUTOCAD

C-A Controls 4/24/01 11:17 AM E10_RLRM_MADC.dwg

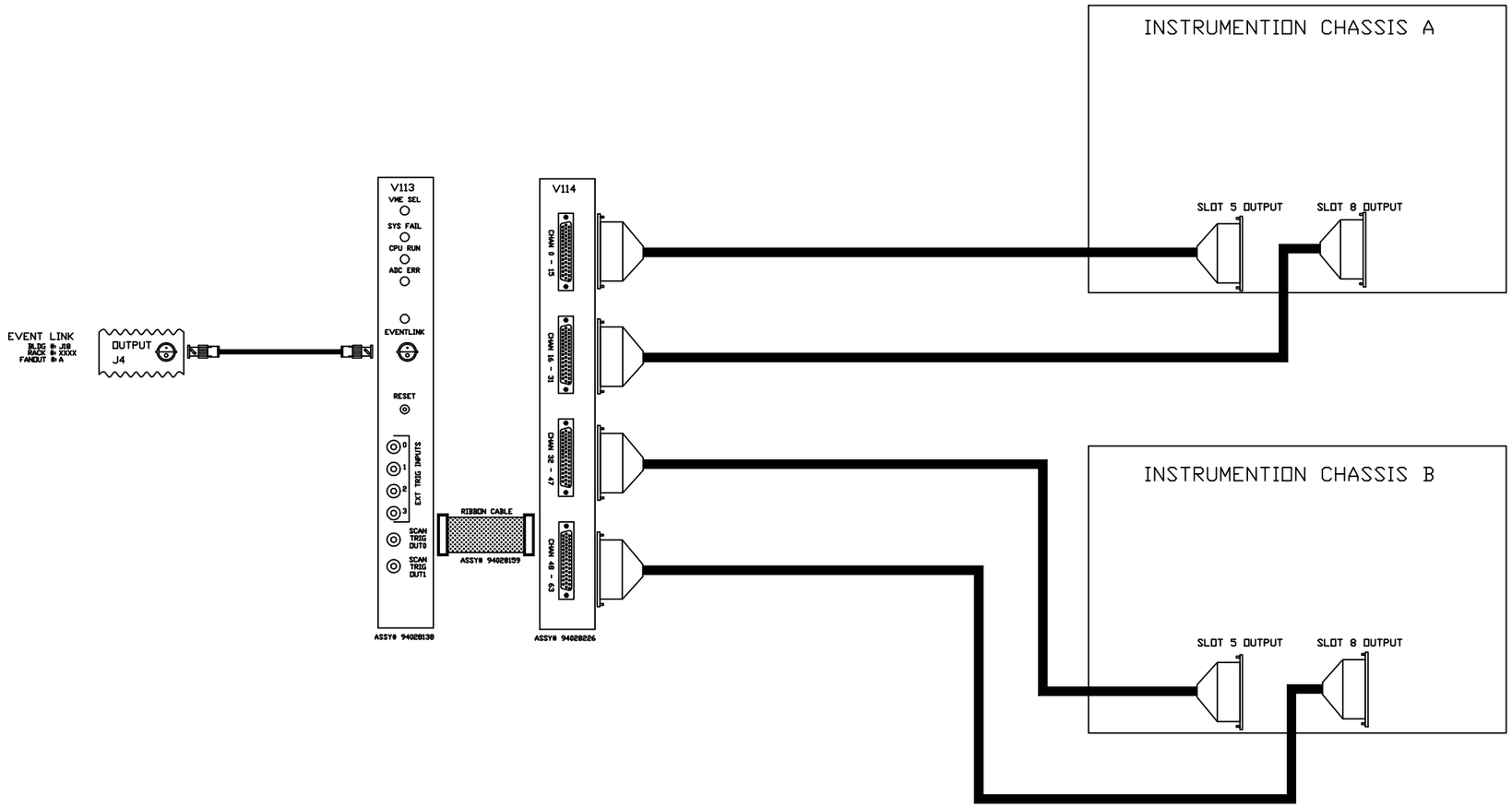

-3	-2	-1	REF DESIGNATOR	ITEM NO.	DESCRIPTION	MATL DWG NO./BNL NO.
QTY REQD						

INTERPRET IN GENERAL ACCORDANCE WITH ASME Y14.24M-1989

UNLESS OTHERWISE SPECIFIED DIMENSIONS ARE IN INCHES

DECIMAL TOLERANCES
.X ±
.XX ±
.XXX ±
ANGULAR TOLERANCE
±

NA FINISH

BREAK SHARP EDGES
MAX. XX MIN. XX

OUTSTANDING ECN

Q.A. CATEGORY		DATE
DRAWN BY	Warren Jappe	4/23/01
CHECKED BY		
DESIGN APPROVAL		
ENGINEER APPROVAL		
SUPVR. APPROVAL		

NEXT ASSEMBLY

BROOKHAVEN NATIONAL LABORATORY
UPTON, N.Y. 11973

AGS CONTROLS WIRING DIAGRAM
BLDG. E10, CST.E10.RLRM
MADC

SIZE A
DRAWING NUMBER
REV.
MATERIAL: N/A
SCALE: NA
WEIGHT:
SHEET

1 *AUTOCAD

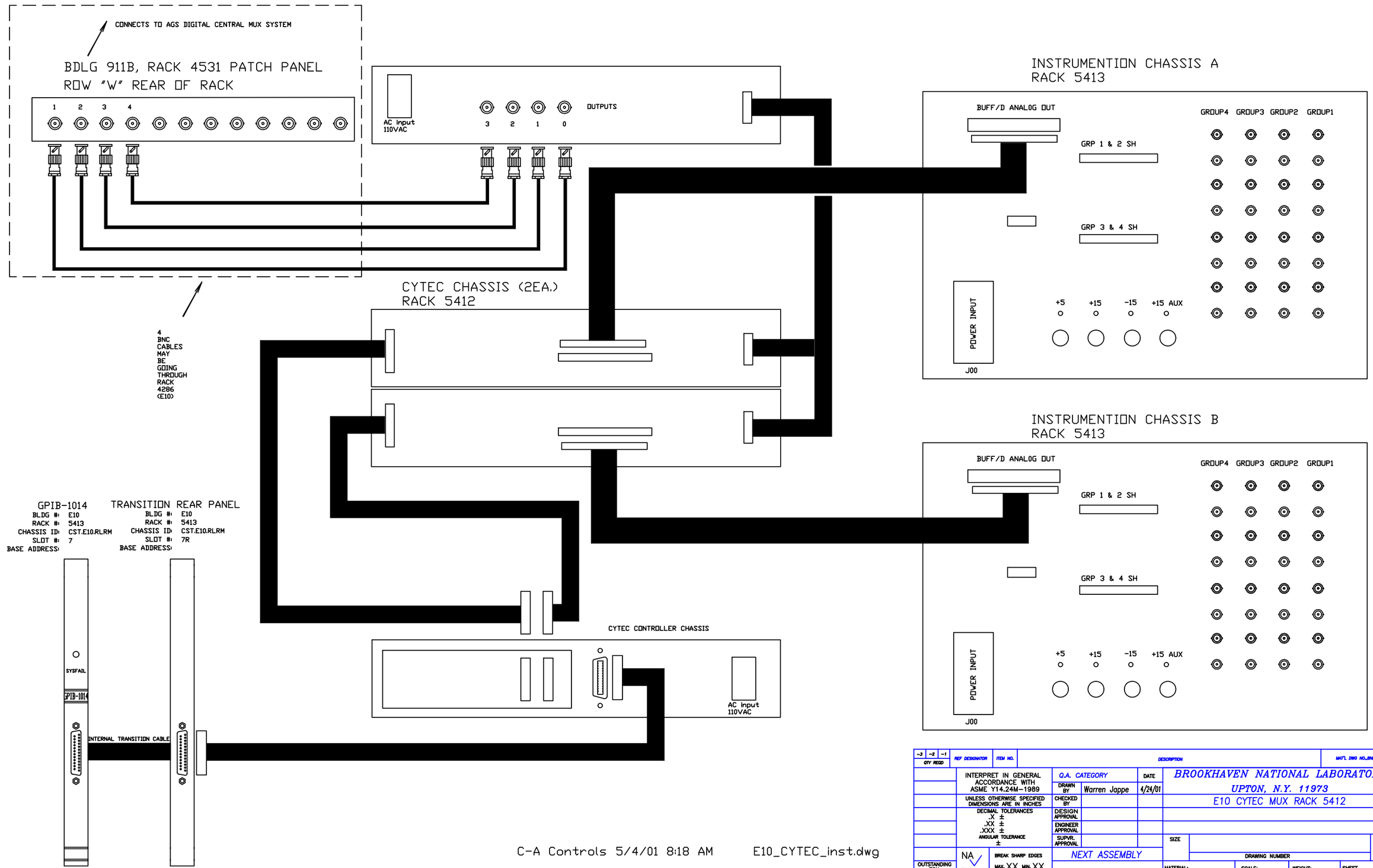

C-A Controls 5/4/01 8:18 AM E10_CYTEC_inst.dwg

REV.	ZONE	ECN NO.	DATE	BY	CKR	APP.

-3	-2	-1	REF DESIGNATOR	ITEM NO.	DESCRIPTION	MAT'L DWG NO.,SHL NO.
QTY REQD						

INTERPRET IN GENERAL ACCORDANCE WITH ASME Y14.24M-1989

UNLESS OTHERWISE SPECIFIED DIMENSIONS ARE IN INCHES

DECIMAL TOLERANCES .X ± .XX ± .XXX ± ANGULAR TOLERANCE ±

NA FINISH

BREAK SHARP EDGES MAX. XX MIN. XX

OUTSTANDING ECN

Q.A. CATEGORY

		DATE
DRAWN BY	Warren Jappe	4/24/01
CHECKED BY		
DESIGN APPROVAL		
ENGINEER APPROVAL		
SUPVR. APPROVAL		

NEXT ASSEMBLY

BROOKHAVEN NATIONAL LABORATORY
UPTON, N.Y. 11973

E10 CYTEC MUX RACK 5412

SIZE | REV. | DRAWING NUMBER | MATERIAL: | SCALE: | WEIGHT: | SHEET

1 *AUTOCAD

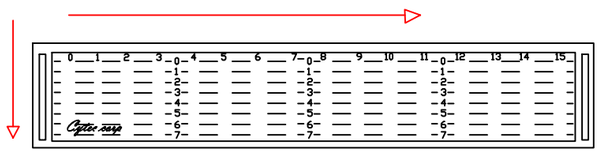

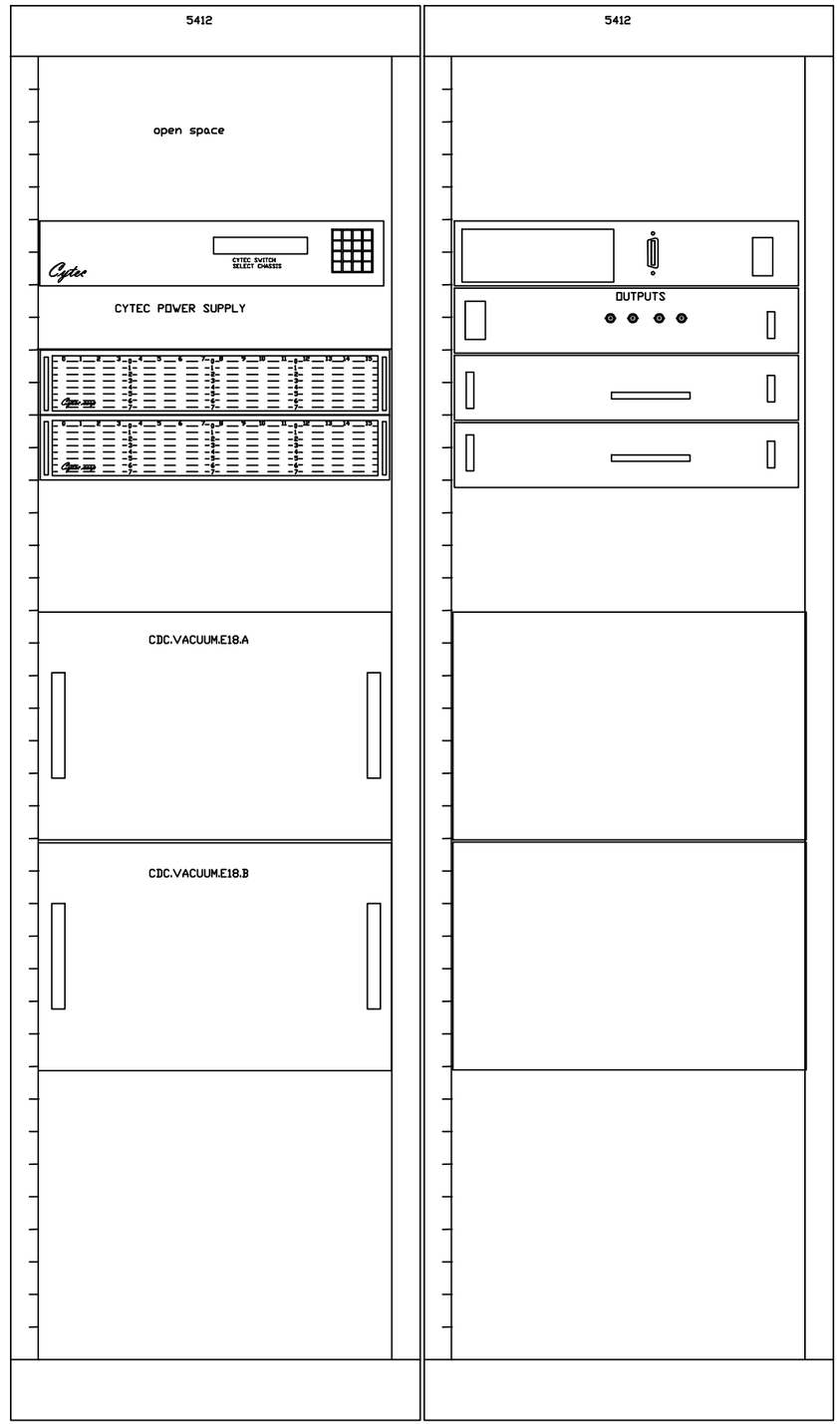

C-A Controls 4/24/01 9:04 AM E10_CYTEC_RACK.dwg

-3	-2	-1	REF DESIGNATOR	ITEM NO.	DESCRIPTION	MAT'L DWG NO.,BNL NO.
QTY REQD						

INTERPRET IN GENERAL ACCORDANCE WITH ASME Y14.24M-1989	Q.A. CATEGORY	DATE	BROOKHAVEN NATIONAL LABORATORY
	DRAWN BY: Warren Jappe	4/24/01	UPTON, N.Y. 11973
UNLESS OTHERWISE SPECIFIED DIMENSIONS ARE IN INCHES	CHECKED BY		E10 CYTEC MUX RACK 5412
DECIMAL TOLERANCES .X ± .XX ± .XXX ± ANGULAR TOLERANCE ±	DESIGN APPROVAL		
	ENGINEER APPROVAL		
	SUPVR. APPROVAL		SIZE / REV.
NA FINISH / BREAK SHARP EDGES MAX. XX MIN. XX	NEXT ASSEMBLY		DRAWING NUMBER
OUTSTANDING ECN			MATERIAL: / SCALE: / WEIGHT: / SHEET 2 of 5

*AUTOCAD