C-A Controls Section
Bldg 911B Wiring Diagrams

Brookhaven National Laboratory, Upton, New York 11973

Created By: Ed Koropsak
Updated by Ed Koropsak 10/14/04

Controls rack

- ✍ Rack 3370 77” Assembly (Sheet 1)
- ✍ VME Chassis CST.911B.BSTR_EVLNK (Sheet 2)
- ✍ VME Chassis BOOSTER-GT-TIME (Sheet 3)
- ✍ VME Chassis BOOSTER-RT-TIME (Sheet 4)
- ✍ Inter-rack Cable Wiring (Sheet 5)

VME Chassis CST-911B-BSTR-EVLNK (Eventlink)

- ✍ Front End Computer, V108 Utility (Sheet 6)
- ✍ V102 & T102 Delay Module (Sheet 7)
- ✍ V100 Output Encoder & BOOSTER EVLNK F/O (Sheet 8)
- ✍ V101 Event Input Modules 0 - 3 (Sheet 9)
- ✍ V101 Event Input Modules 4 - 7 (Sheet 10)
- ✍ V101 Event Input Modules 8 - B (Sheet 11)
- ✍ V101 Event Input Modules C - F (Sheet 12)

VME Chassis BOOSTER_RT_TIME

- ✍ V296-1 Timeline Decoder Mod 1 (Supercycle Trigger) (Sheet 13)
- ✍ V296-2 Timeline Decoder Mod 2 (Supercycle Trigger) (Sheet 14)
- ✍ V198 & T198 Timeline Trig/Buffer Module (Sheet 15
- ✍ V297-1 Timeline Trigger Module 1 (Sheet 16)
- ✍ V297-2 Timeline Trigger Module 2 (Sheet 17)
- ✍ V297-3 Timeline Trigger Module 3 (Sheet 18)
- ✍ V297-4 Timeline Trigger Module 4 (Sheet 19)
- ✍ V296-4 Timeline Decoder Mod 3 (Supercycle Trigger) (Sheet 12A)

VME Chassis BOOSTER_GT_TIME
VME Chassis CFE-911B-BSTR-GC

- ✍ V194 Pulse Fanout Module (Sheet 20)
- ✍ BLANK PAGE (Sheet 21)
- ✍ V297-5 Timeline Trigger Module 1 (Sheet 22)
- ✍ V297-6 Timeline Trigger Module 2 (Sheet 23)
- ✍ V297-7 Timeline Trigger Module 3 (Sheet 24)
- ✍ V297-8 Timeline Trigger Module 4 (Sheet 25)
- ✍ V297-9 Timeline Trigger Module 5 (Sheet 26)
- ✍ V132 Gauss Generator Module (Sheet 27)
- ✍ V294 Pulse Fanout Module (Sheet 28)
- ✍ Front End Computer, V108 Utility (Sheet 29z)

REV.	ZONE	ECN NO.	DATE	BY	CKR	APP.

Schoenfeld, Controls 1/30/2004 10:41 AM x_01.dwg

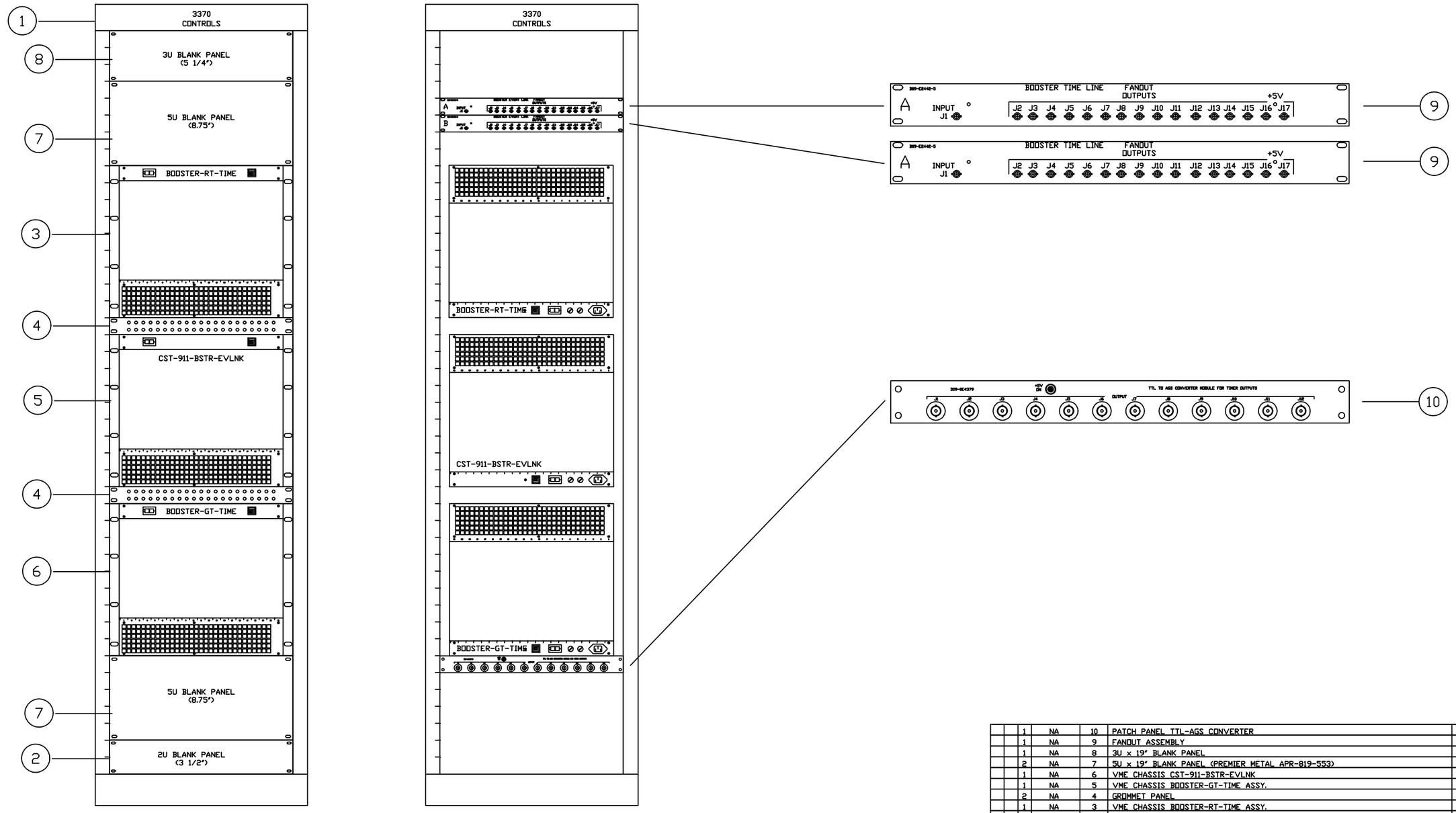

FRONT VIEW REAR VIEW

-3	-2	-1	REF DESIGNATOR	ITEM NO.	DESCRIPTION	MAT'L. DWG NO.,BNL NO.
		1	NA	10	PATCH PANEL TTL-AGS CONVERTER	
		1	NA	9	FANOUT ASSEMBLY	D09-E2442
		1	NA	8	3U x 19" BLANK PANEL	-
		2	NA	7	5U x 19" BLANK PANEL (PREMIER METAL APR-819-553)	-
		1	NA	6	VME CHASSIS CST-911-BSTR-EVLNK	94028xxx
		1	NA	5	VME CHASSIS BOOSTER-GT-TIME ASSY.	94028xxx
		2	NA	4	GROMMET PANEL	94028410
		1	NA	3	VME CHASSIS BOOSTER-RT-TIME ASSY.	94028xxx
		1	NA	2	2U x 19" BLANK PANEL (PREMIER METAL APR-319-553)	-
		1	NA	1	19" RACK, 77" H RACK SPACE	94028xxx
		QTY REQD				

INTERPRET IN GENERAL ACCORDANCE WITH ASME Y14.24M-1989

UNLESS OTHERWISE SPECIFIED DIMENSIONS ARE IN INCHES

DECIMAL TOLERANCES
.X ±.030
.XX ±.015
.XXX ±.005
ANGULAR TOLERANCE
± .5°

NA FINISH

BREAK SHARP EDGES
MAX. XX MIN. XX

OUTSTANDING ECN

Q.A. CATEGORY A-3		DATE
DRAWN BY	Ed Koropsak	4/18/2000
CHECKED BY		
DESIGN APPROVAL		
ENGINEER APPROVAL	W. Buxton	4/18/00
SUPVR. APPROVAL		

NEXT ASSEMBLY

BROOKHAVEN NATIONAL LABORATORY
UPTON, N.Y. 11973

C-A CONTROLS

Bldg 911B

BOOSTER TIMING RACK

SIZE D | DRAWING NUMBER 94028xxx | REV. A

MATERIAL: ——— SCALE: NA WEIGHT: – SHEET 1

*AUTOCAD

REV.	ZONE	ECN NO.	DATE	BY	CKR	APP.

Schoenfeld, Controls 1/30/2004 10:41 AM x_02.dwg

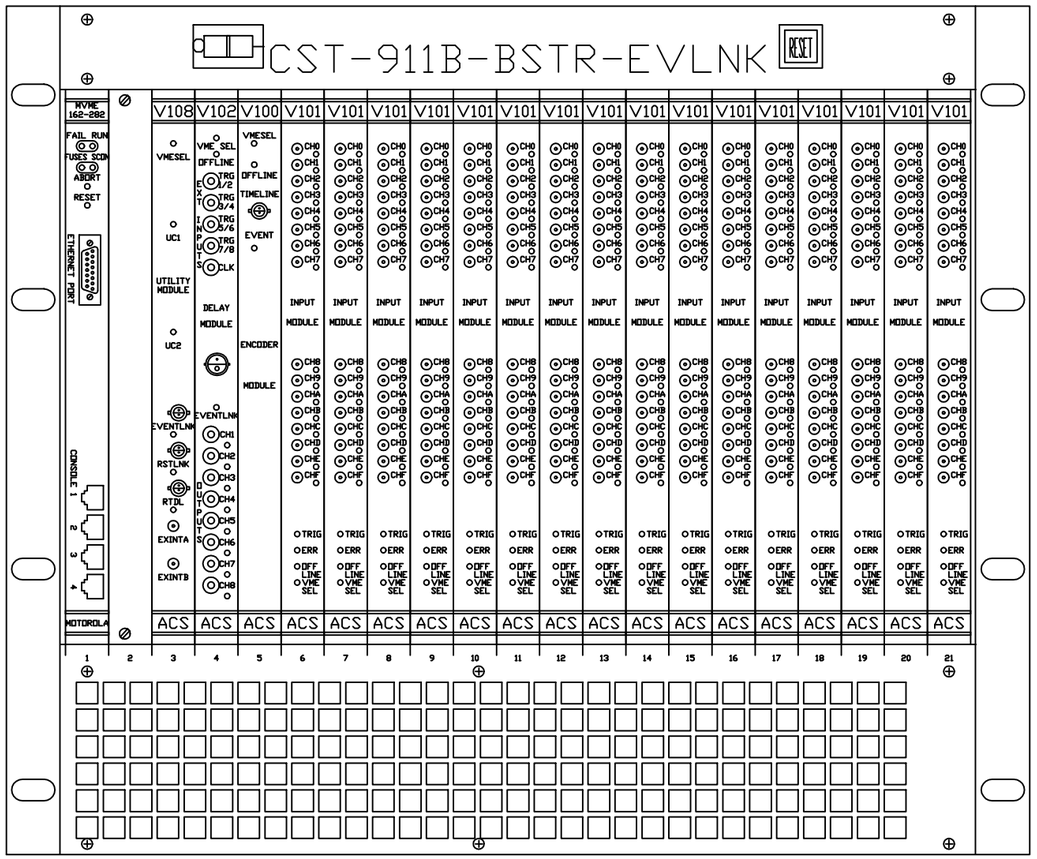

FRONT VIEW

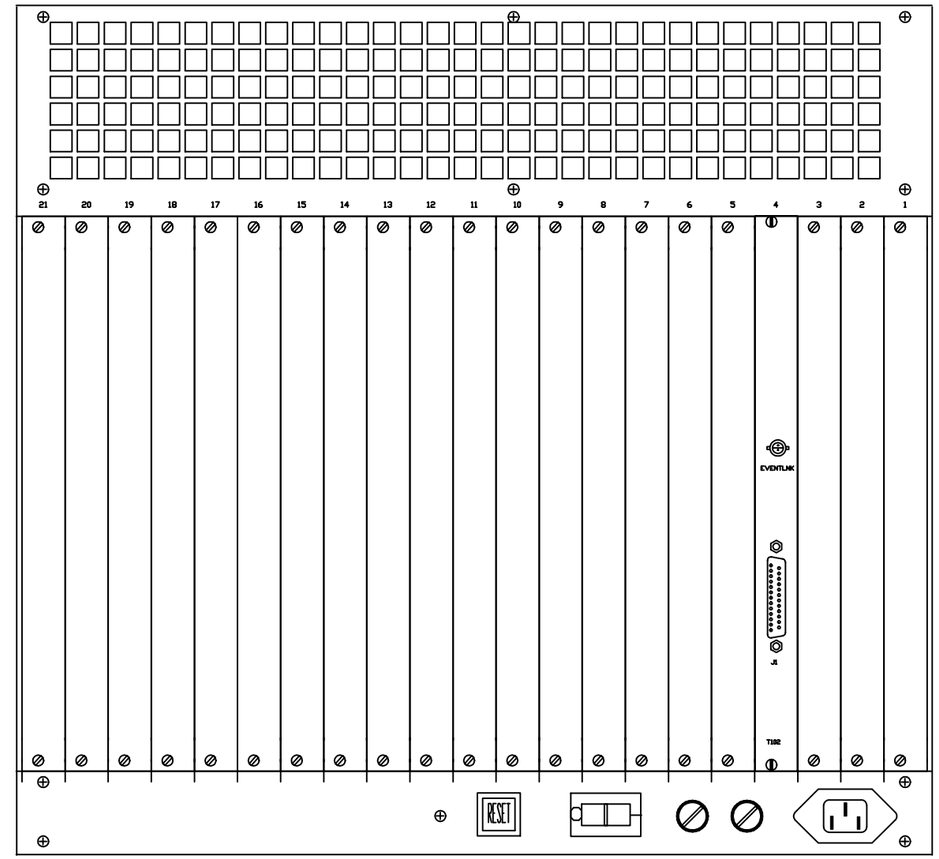

CST-911B-BSTR-EVLNK
REAR VIEW

NOTE:

1. ALL UNUSED SLOTS, FRONT AND REAR

2. SPECIAL P2 BACKPLANE INSTALLED AND NO OTHER BOARDS ARE TO BE USED IN SLOTS 5 TO 21 HARDWARE DAMAGE WILL RESULT!!! ASSY.#94028031

SLOT 5 J2C7 JUMPERED TO SLOT 21 J2C3 ON BACKPLANE.

-3	-2	-1	REF DESIGNATOR	ITEM NO.	DESCRIPTION	MAT'L DWG NO.,BNL NO.
		1	REAR SL 4	9	T102 TRANSITION MODULE	
		23	SEE NOTE 1	8	VME BLANK PANEL (ELECTRO-SPACE ESFE-2985)	
		1	NOTE 2	7	P2 BACKPLANE	94028031
		16	SLOTS 6-21	6	V101 EVENT INPUT MODULES	94028050
		1	SLOT 5	5	V100 EVENT LINE ENCODER	94028046
		1	SLOT 4	4	V102 TL DECODER/ DELAY MODULE	
		1	SLOT 3	3	V108 UTILITY MODULE	94028094
		1	SLOT 1	2	FRONT END COMPUTER	MVME 162-282
		1	N/A	1	VME CHASSIS	RHIC-93008000

QTY REQD

INTERPRET IN GENERAL ACCORDANCE WITH ASME Y14.24M-1989

UNLESS OTHERWISE SPECIFIED DIMENSIONS ARE IN INCHES

DECIMAL TOLERANCES
.X ±.030
.XX ±.015
.XXX ±.005
ANGULAR TOLERANCE ± .5°

NA FINISH

BREAK SHARP EDGES MAX. XX MIN. XX

OUTSTANDING ECN

Q.A. CATEGORY A-3		DATE
DRAWN BY	Ed Koropsak	4/18/2000
CHECKED BY		
DESIGN APPROVAL		
ENGINEER APPROVAL	W. Buxton	4/18/00
SUPVR. APPROVAL		

NEXT ASSEMBLY

BROOKHAVEN NATIONAL LABORATORY
UPTON, N.Y. 11973
C-A CONTROLS
BLDG 911B
CST-911B-BSTR-EVLNK

SIZE D | DRAWING NUMBER | REV. A

MATERIAL: ——— SCALE: NA WEIGHT: — SHEET 2

*AUTOCAD

REV.	ZONE	ECN NO.	DATE	BY	CKR	APP.

Controls, bnl 10/13/2004 10:58 AM x_03.dwg

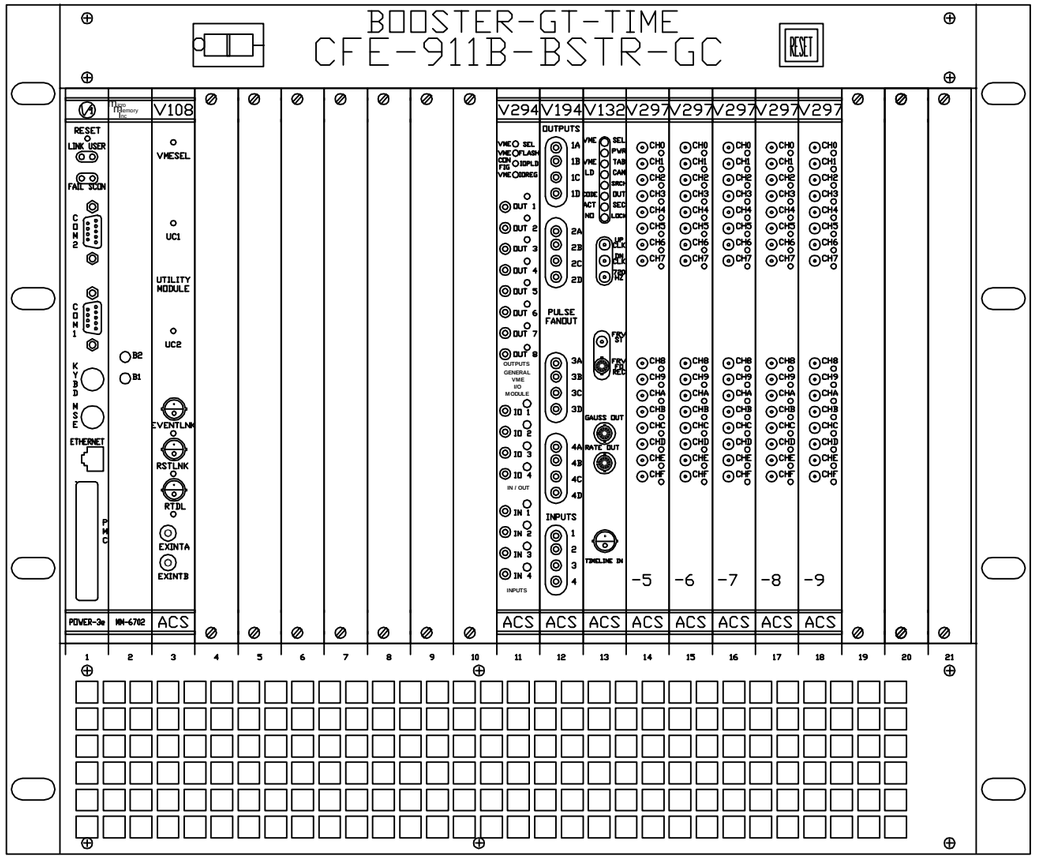

FRONT VIEW

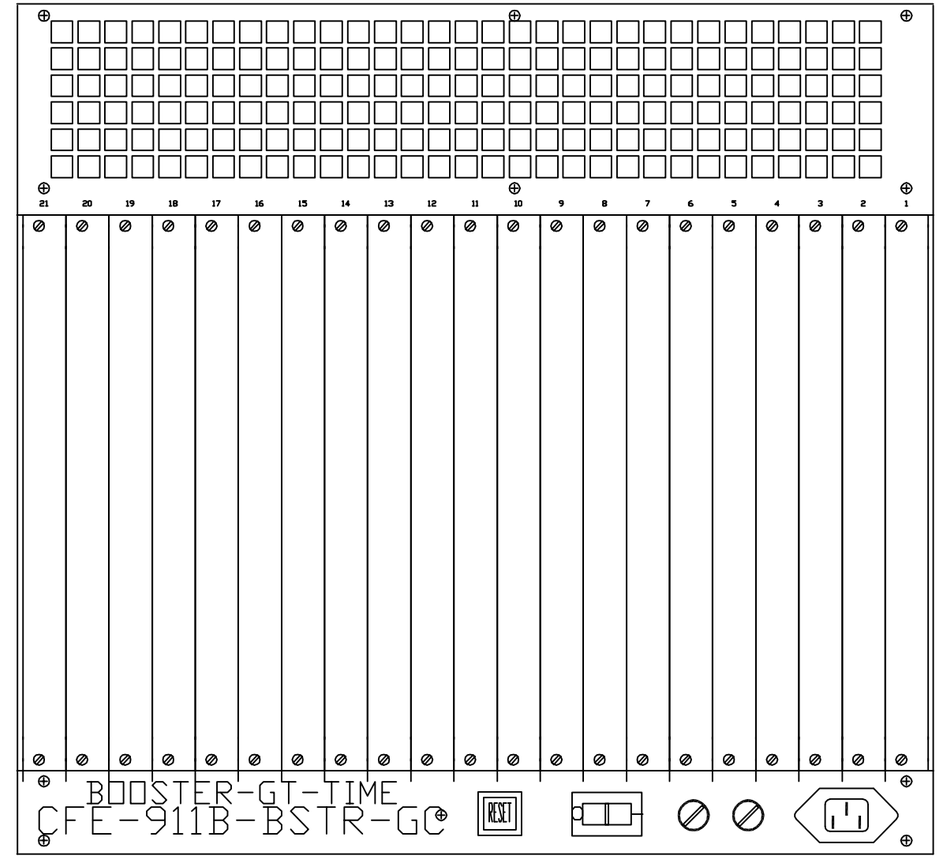

REAR VIEW

NOTE:

1. ALL UNUSED SLOTS, FRONT AND REAR

2. SPECIAL P2 BACKPLANE INSTALLED AND NO OTHER BOARDS ARE TO BE USED IN SLOTS 13 TO 21 HARDWARE DAMAGE WILL RESULT!!! ASSY.# 94028031

QTY REQD -3	QTY REQD -2	QTY REQD -1	REF DESIGNATOR	ITEM NO.	DESCRIPTION	MAT'L DWG NO./PART NO.
		1	SLOT 3	12	V108 UTILITY MODULE	94028094
		1	SLOT 2	11	MEMORY MODULE	MM6702
		1	SLOT 1	10	POWER3e WITH 64 MB MEMORY	
		1	SLOT 19	9	V194 FANOUT MODULE	94028196
		1	SLOT 17	8	V297 TIMELINE MODULE	D09-E2726-8
		1	SLOT 16	7	V297 TIMELINE MODULE	D09-E2726-7
		1	SLOT 15	6	V297 TIMELINE MODULE	D09-E2726-6
		1	SLOT 14	5	V297 TIMELINE MODULE	D09-E2726-5
		1	SLOT 12	4	V294 GENERAL PURPOSE I/O MODULE	94028895
		1	SLOT 13	3	V132 GAUSS GENERATOR MODULE	D09-E2971-1
		31	NOTE 1	2	BLANK PANELS (ELECTRO-DPACE ESFE-2985)	
		1	N/A	1	VME CHASSIS	RHIC-93008000

INTERPRET IN GENERAL ACCORDANCE WITH ASME Y14.24M-1989

UNLESS OTHERWISE SPECIFIED DIMENSIONS ARE IN INCHES

DECIMAL TOLERANCES
.X ±.030
.XX ±.015
.XXX ±.005
ANGULAR TOLERANCE ± .5°

NA FINISH

BREAK SHARP EDGES MAX. XX MIN. XX

OUTSTANDING ECN

Q.A. CATEGORY A-3

		DATE
DRAWN BY	Ed Koropsak	4/18/2000
CHECKED BY		
DESIGN APPROVAL		
ENGINEER APPROVAL	W. Buxton	4/18/00
SUPVR. APPROVAL		

NEXT ASSEMBLY

BROOKHAVEN NATIONAL LABORATORY
UPTON, N.Y. 11973
C-A CONTROLS
Bldg 911B
BOOSTER-GAUSS-TIME

SIZE D | DRAWING NUMBER 94028xxx | REV. A

MATERIAL: ——— SCALE: NA WEIGHT: – SHEET 3

*AUTOCAD

REV.	ZONE	ECN NO.	DATE	BY	CKR	APP.

Controls, bnl 10/13/2004 11:04 AM x_04.dwg

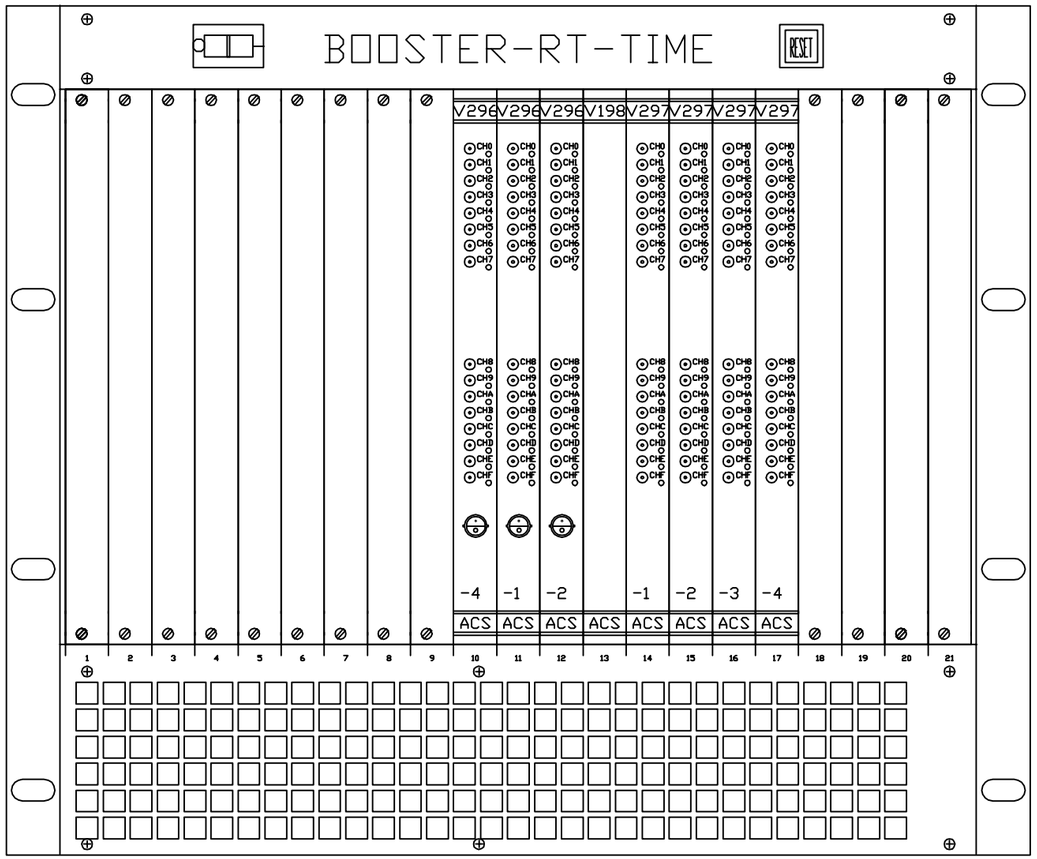

FRONT VIEW

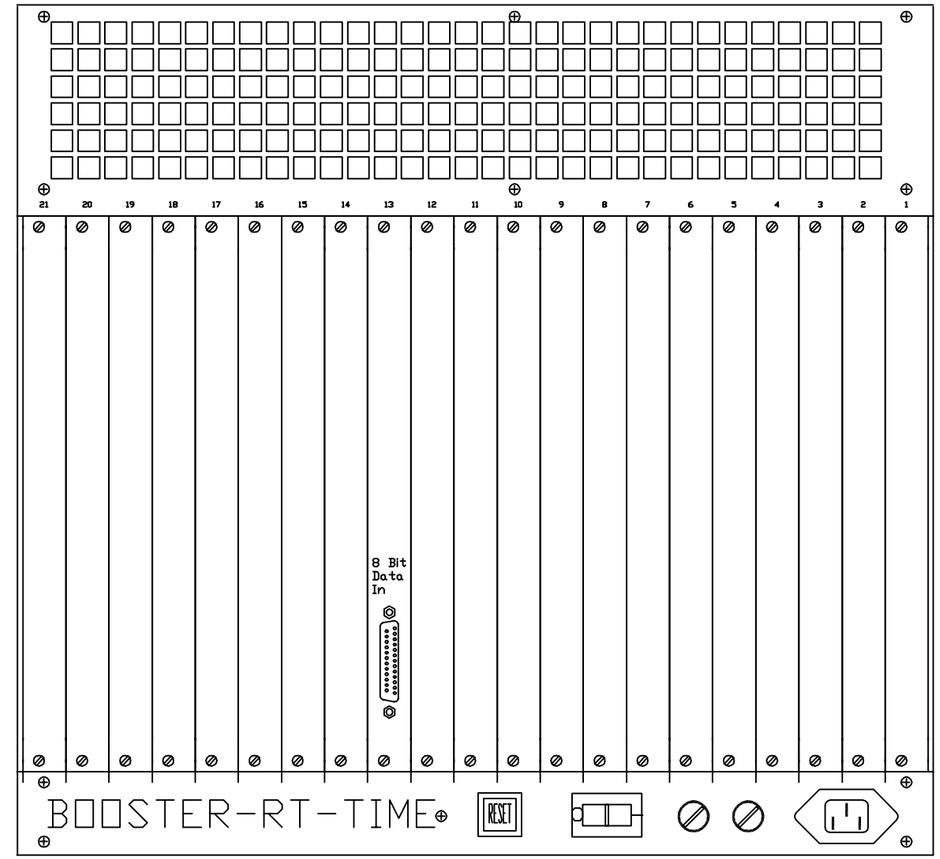

REAR VIEW

NOTE:

1. ALL UNUSED SLOTS, FRONT AND REAR

2. SPECIAL P2 BACKPLANE INSTALLED AND NO OTHER BOARDS ARE TO BE USED IN SLOTS 13 TO 21 HARDWARE DAMAGE WILL RESULT!!! ASSY.#94028031

-3	-2	-1	REF DESIGNATOR	ITEM NO.	DESCRIPTION	MAT'L. DWG NO.,BNL NO.
		1	SLOT 10	2	V296 TIMEOUT DECODER MODULE	D09-E2725-4
		33	NOTE 1	10	BLANK PANELS (ELECTRO-SPACE ESFE-2985)	
		1	SLOT 17	9	V297 TIMELINE MODULE	D09-E2726-4
		1	SLOT 16	8	V297 TIMELINE MODULE	D09-E2726-3
		1	SLOT 15	7	V297 TIMELINE MODULE	D09-E2726-2
		1	SLOT 14	6	V297 TIMELINE MODULE	D09-E2726-1
		1	SLOT 13	5	T198 TRANSITION MODULE	D09-E2613
		1	SLOT 13	4	V198 TIMELINE BUFFER MODULE	D09-E2589
		1	SLOT 12	3	V296 TIMEOUT DECODER MODULE	D09-E2725-2
		1	SLOT 11	2	V296 TIMEOUT DECODER MODULE	D09-E2725-1
		1	N/A	1	VME CHASSIS	RHIC-93008000

QTY REQD

INTERPRET IN GENERAL ACCORDANCE WITH ASME Y14.24M-1989

UNLESS OTHERWISE SPECIFIED DIMENSIONS ARE IN INCHES

DECIMAL TOLERANCES
.X ±.030
.XX ±.015
.XXX ±.005
ANGULAR TOLERANCE ± .5°

NA FINISH

BREAK SHARP EDGES MAX. XX MIN. XX

OUTSTANDING ECN

Q.A. CATEGORY A-3		DATE
DRAWN BY	Ed Koropsak	4/18/2000
CHECKED BY		
DESIGN APPROVAL		
ENGINEER APPROVAL	W. Buxton	4/18/00
SUPVR. APPROVAL		

NEXT ASSEMBLY

BROOKHAVEN NATIONAL LABORATORY
UPTON, N.Y. 11973
C-A CONTROLS
Bldg 911B
VME CHASSIS BOOSTER-RT-TIME

SIZE D | DRAWING NUMBER 94028xxx | REV. A

MATERIAL: ——— SCALE: NA WEIGHT: – SHEET 4

*AUTOCAD

REV.	ZONE	ECN NO.	DATE	BY	CKR	APP.

Schoenfeld, Controls 1/30/2004 10:42 AM x_05.dwg

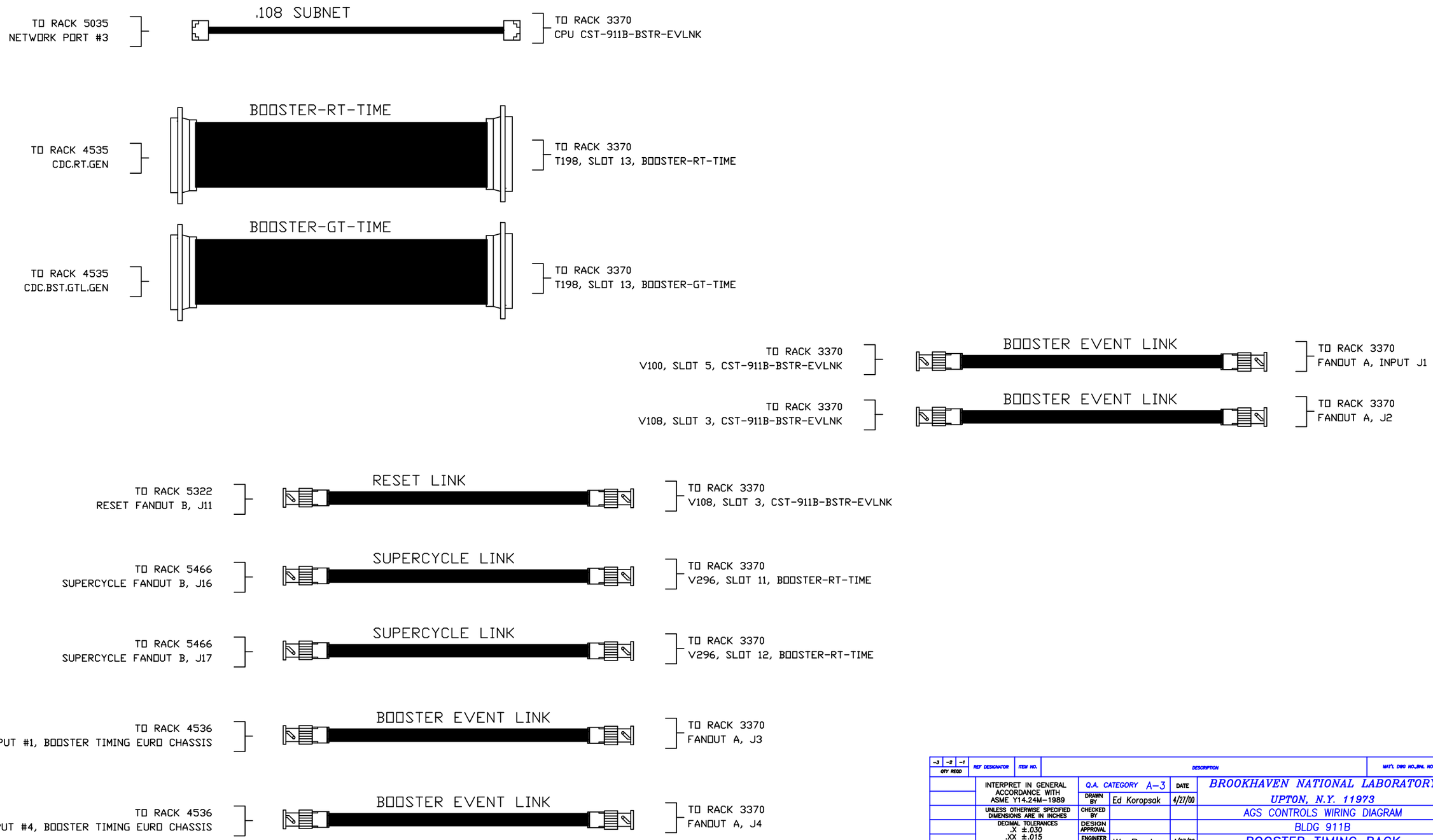

-3	-2	-1	REF DESIGNATOR	ITEM NO.	DESCRIPTION	MAT'L DWG NO.,BNL NO.
QTY REQD						

INTERPRET IN GENERAL ACCORDANCE WITH ASME Y14.24M-1989

UNLESS OTHERWISE SPECIFIED DIMENSIONS ARE IN INCHES

DECIMAL TOLERANCES
.X ±.030
.XX ±.015
.XXX ±.005
ANGULAR TOLERANCE ± .5°

OUTSTANDING ECN

NA FINISH

BREAK SHARP EDGES
MAX. XX MIN. XX

Q.A. CATEGORY A-3	DATE	
DRAWN BY	Ed Koropsak	4/27/00
CHECKED BY		
DESIGN APPROVAL		
ENGINEER APPROVAL	W. Buxton	4/27/00
SUPVR. APPROVAL		
NEXT ASSEMBLY		

BROOKHAVEN NATIONAL LABORATORY
UPTON, N.Y. 11973

AGS CONTROLS WIRING DIAGRAM

BLDG 911B

BOOSTER TIMING RACK

SIZE D | DRAWING NUMBER 94028xxx | REV. A

MATERIAL: ——— SCALE: NA WEIGHT: – SHEET 5

*AUTOCAD

REV.	ZONE	ECN NO.	DATE	BY	CKR	APP.

Schoenfeld, Controls 1/30/2004 10:42 AM x_06.dwg

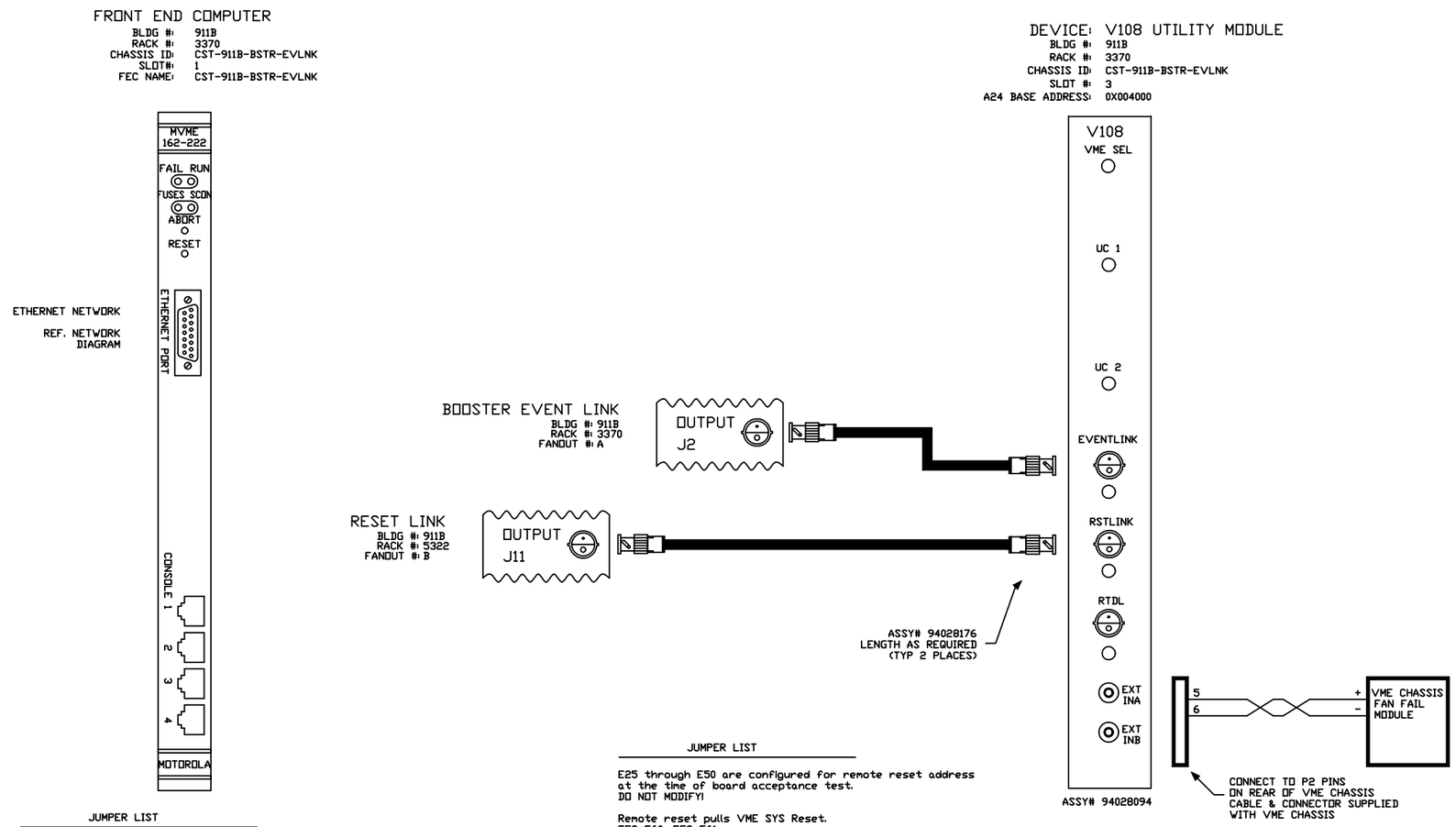

JUMPER LIST

J1=IN-SYS CONTROLLER
J11=ALL IN

J12 5 & 6=IN
J12 8 & 10=IN
J12 9 & 11=IN
ALL OTHERS OUT

J13 3 & 5=IN-ONBOARD BATTERY
J13 4 & 6=IN-BACKUP

J14=OUT-NO SCSI TERM

JUMPER LIST

E25 through E50 are configured for remote reset address at the time of board acceptance test.
DO NOT MODIFY!

Remote reset pulls VME SYS Reset.
E58-E60, E59-E61

A24 BASE ADDRESS= 4000h
E1-E13, E2-E14, E3-E15, E4-E16, E5-E17, E6-E18
E7-E19, E8-E20, E9-E21, E10-E22, E11-E24, E57-E23
SW1=OPEN
SW2=CLOSED
SW3=OPEN
SW4=OPEN

-3	-2	-1	REF DESIGNATOR	ITEM NO.	DESCRIPTION	MAT'L. DWG NO./JAN. NO.
QTY REQD						

INTERPRET IN GENERAL ACCORDANCE WITH ASME Y14.24M-1989

UNLESS OTHERWISE SPECIFIED DIMENSIONS ARE IN INCHES
DECIMAL TOLERANCES
.X ±.030
.XX ±.015
.XXX ±.005
ANGULAR TOLERANCE
± .5°

NA FINISH
BREAK SHARP EDGES
MAX. XX MIN. XX

OUTSTANDING ECN

Q.A. CATEGORY A-3		DATE
DRAWN BY	Ed Koropsak	11/1/2000
CHECKED BY		
DESIGN APPROVAL		
ENGINEER APPROVAL		
SUPVR. APPROVAL		

NEXT ASSEMBLY

BROOKHAVEN NATIONAL LABORATORY
UPTON, N.Y. 11973

C-A CONTROLS WIRING DIAGRAM
911B, VME CST.911B-BSTR-EVLNK
FT END COMP/V108 UTIL MODULE

SIZE D | DRAWING NUMBER | REV. A

MATERIAL: ——— SCALE: NA WEIGHT: – SHEET 6

*AUTOCAD

REV.	ZONE	ECN NO.	DATE	BY	CKR	APP.

Controls, bnl 10/13/2004 11:28 AM x_07.dwg

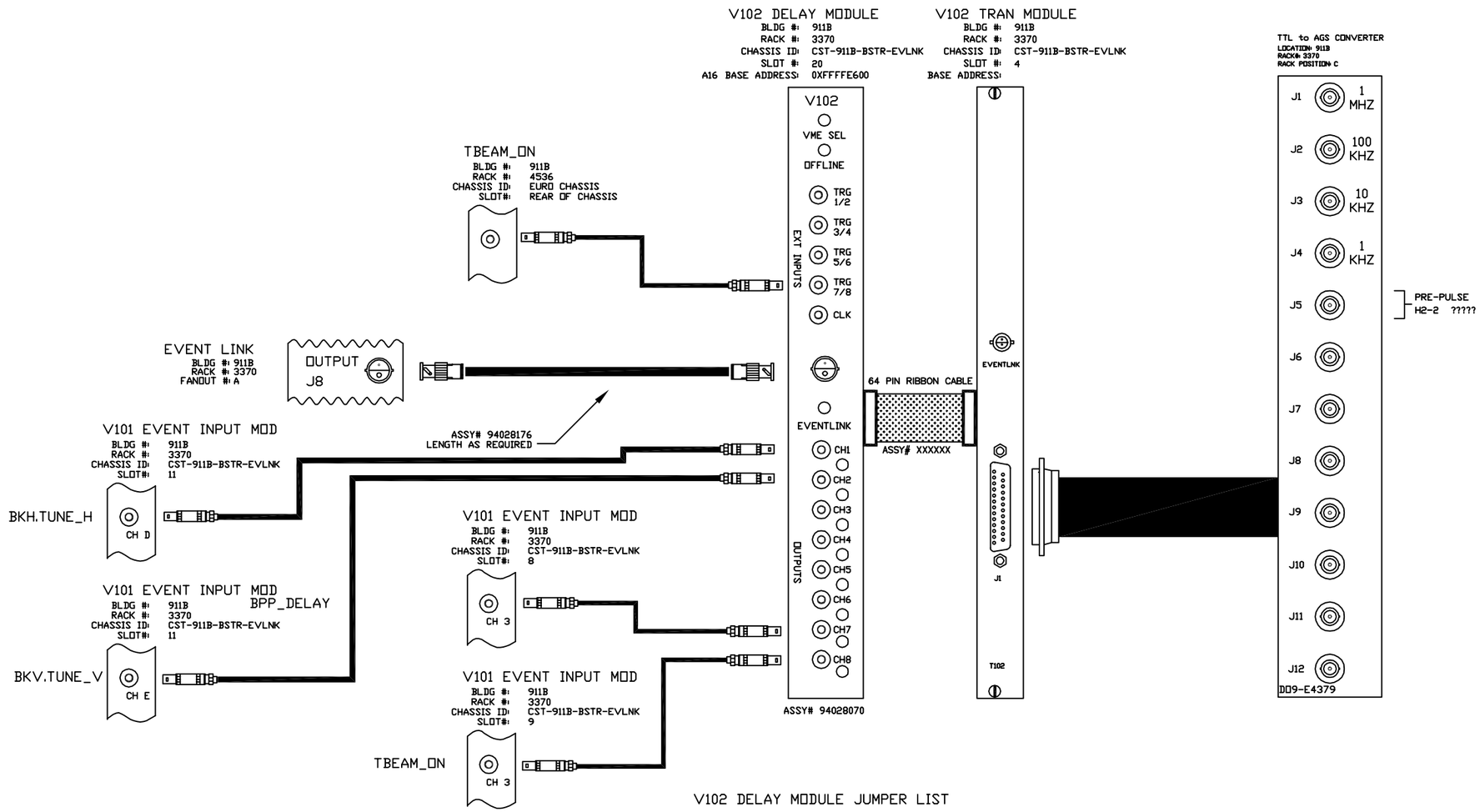

V102 DELAY MODULE JUMPER LIST

A16 BASE ADDRESS
0XFFFFE600

JP1=OUT
JP2=OUT
JP3=OUT
JP4=IN
JP5=IN
JP6=OUT
JP7=OUT

EVENT LINK INPUT

JP8=IN
JP9=OUT
JP10=OUT

JP11=IN
JP12=IN
JP13=OUT
JP14=IN

-3	-2	-1	REF DESIGNATOR	ITEM NO.	DESCRIPTION	MAT'L DWG NO./BNL NO.
QTY REQD						

INTERPRET IN GENERAL ACCORDANCE WITH ASME Y14.24M-1989

UNLESS OTHERWISE SPECIFIED DIMENSIONS ARE IN INCHES

DECIMAL TOLERANCES
.X ±.030
.XX ±.015
.XXX ±.005
ANGULAR TOLERANCE
± .5°

FINISH: NA

BREAK SHARP EDGES
MAX. XX MIN. XX

OUTSTANDING ECN

Q.A. CATEGORY A-3

		DATE
DRAWN BY	Ralph Schoenfeld	1/29/04
CHECKED BY		
DESIGN APPROVAL		
ENGINEER APPROVAL		
SUPVR. APPROVAL		

NEXT ASSEMBLY

BROOKHAVEN NATIONAL LABORATORY
ASSOCIATED UNIVERSITIES, INC.
UPTON, N.Y. 11973

CONTROLS WIRING DIAGRAM

BLDG 911B, CHASSIS CST-911B-BSTR-EVLNK

V102 DELAY MODULE

SIZE D | DRAWING NUMBER | REV. A

MATERIAL: ——— SCALE: NA WEIGHT: -- SHEET 7

*AUTOCAD

Controls, bnl 10/14/2004 9:13 AM x_08.dwg

REV.	ZONE	ECN NO.	DATE	BY	CKR	APP.

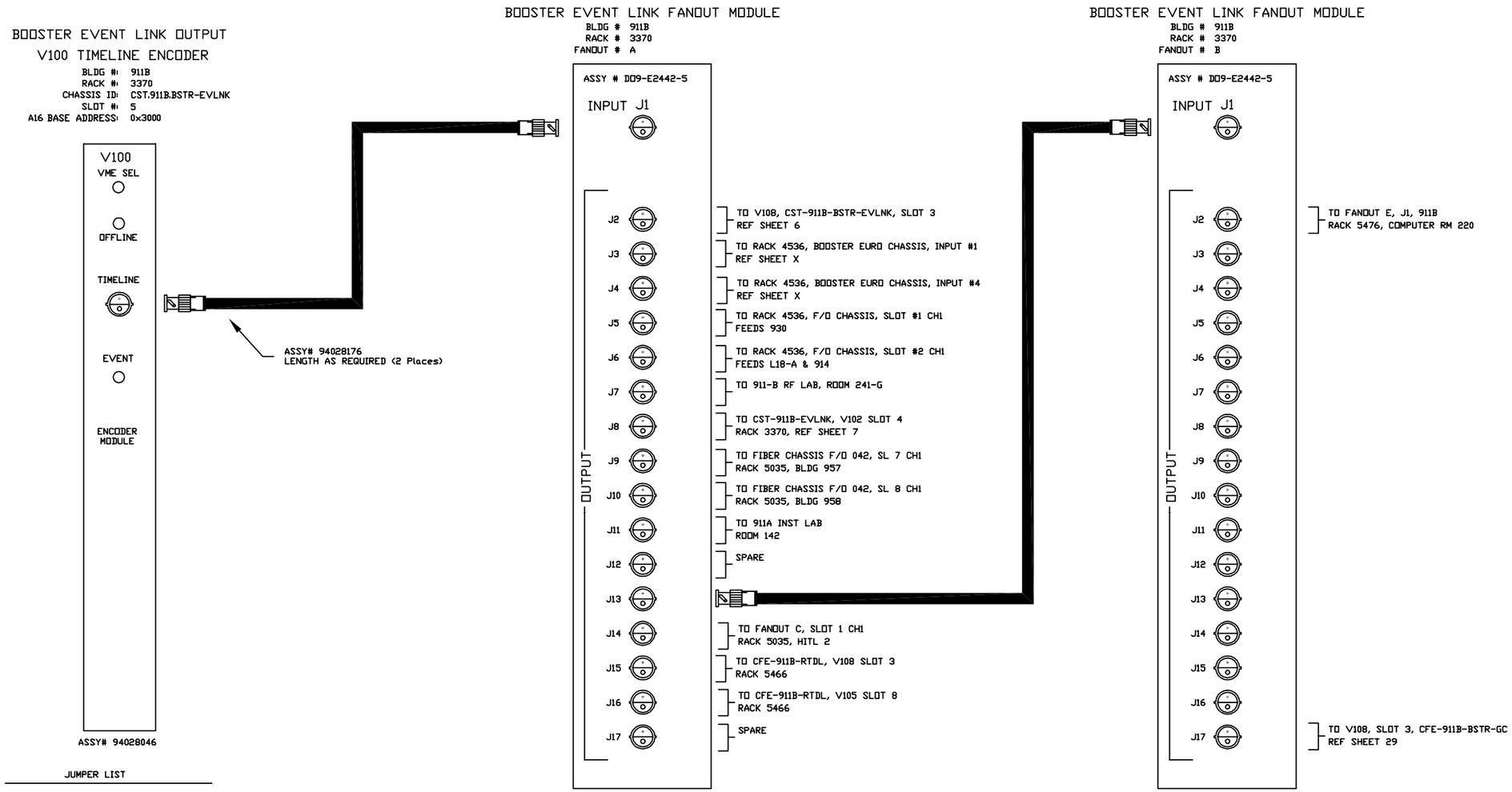

JUMPER LIST

JP1=IN-ADDR =0x3000
JP2=IN
JP3=OUT
JP4=OUT

JP5=IN-INT. VECTOR=0x5
JP6=OUT
JP7=IN
JP8=OUT

JP9=OUT

-3	-2	-1	REF DESIGNATOR	ITEM NO.	DESCRIPTION	MAT'L DWG NO.,BRL NO.
QTY REQD						

INTERPRET IN GENERAL ACCORDANCE WITH ASME Y14.24M-1989

UNLESS OTHERWISE SPECIFIED DIMENSIONS ARE IN INCHES

DECIMAL TOLERANCES
.X ±.030
.XX ±.015
.XXX ±.005
ANGULAR TOLERANCE
± .5°

NA FINISH

BREAK SHARP EDGES
MAX. XX MIN. XX

OUTSTANDING ECN

Q.A. CATEGORY A-3

		DATE
DRAWN BY	Ed Koropsak	11/1/2000
CHECKED BY		
DESIGN APPROVAL		
ENGINEER APPROVAL	Wes Buxton	
SUPVR. APPROVAL		

NEXT ASSEMBLY

BROOKHAVEN NATIONAL LABORATORY
UPTON, N.Y. 11973

C-A CONTROLS WIRING DIAGRAM

BLDG 911B

BOOSTER EVENT LINK

SIZE D | DRAWING NUMBER | REV. A

MATERIAL: ——— SCALE: NA WEIGHT: – SHEET 8

*AUTOCAD

REV.	ZONE	ECN NO.	DATE	BY	CKR	APP.

EVENT INPUT MODULE (0)

BLDG #: 911B
RACK #: 3370
CHASSIS ID: CST.911B-BSTR-EVLNK
SLOT #: 6
A16 BASE ADDRESS: 0x3800

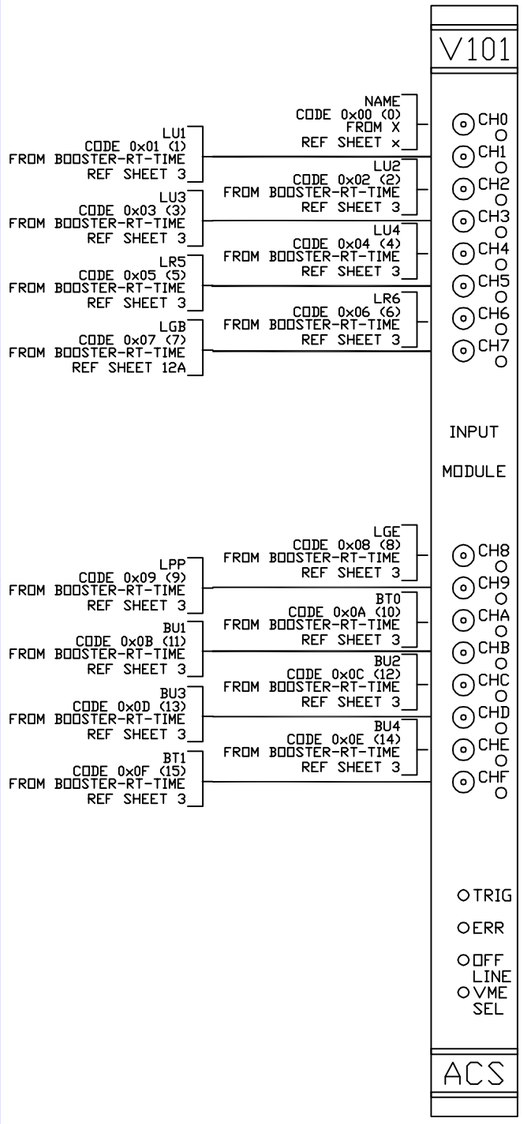

EVENT INPUT MODULE (1)

BLDG #: 911B
RACK #: 3370
CHASSIS ID: CST.911B-BSTR-EVLNK
SLOT #: 7
A16 BASE ADDRESS: 0x3880

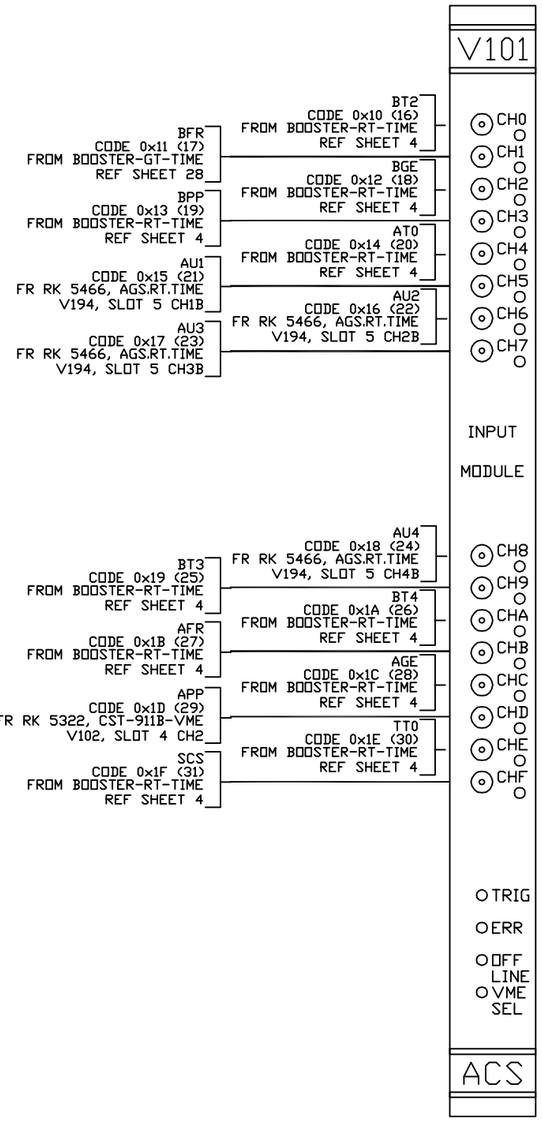

EVENT INPUT MODULE (2)

BLDG #: 911B
RACK #: 3370
CHASSIS ID: CST.911B-BSTR-EVLNK
SLOT #: 8
A16 BASE ADDRESS: 0x3900

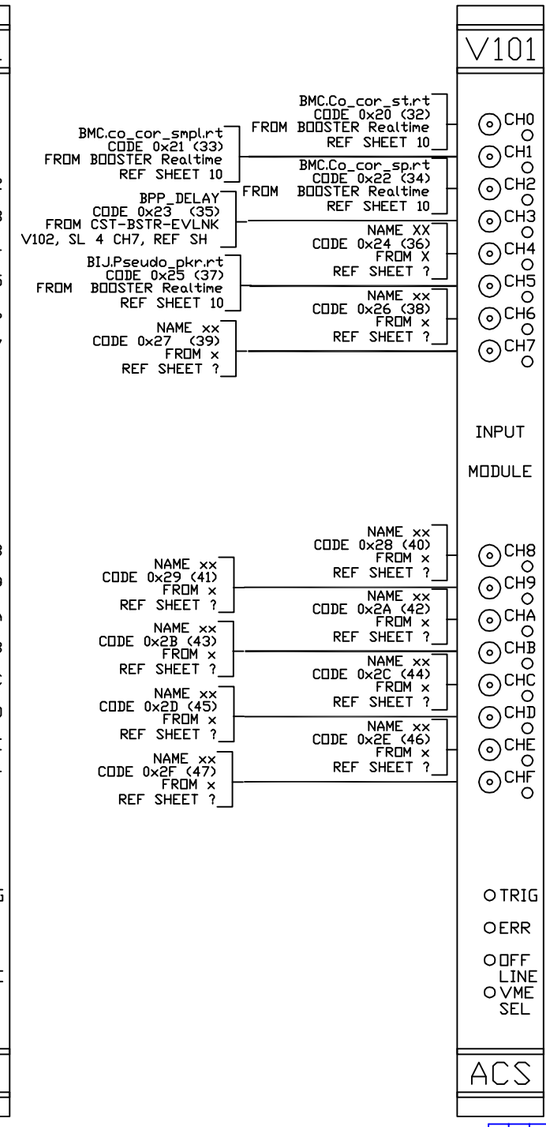

EVENT INPUT MODULE (3)

BLDG #: 911B
RACK #: 3370
CHASSIS ID: CST.911B-BSTR-EVLNK
SLOT #: 9
A16 BASE ADDRESS: 0x3980

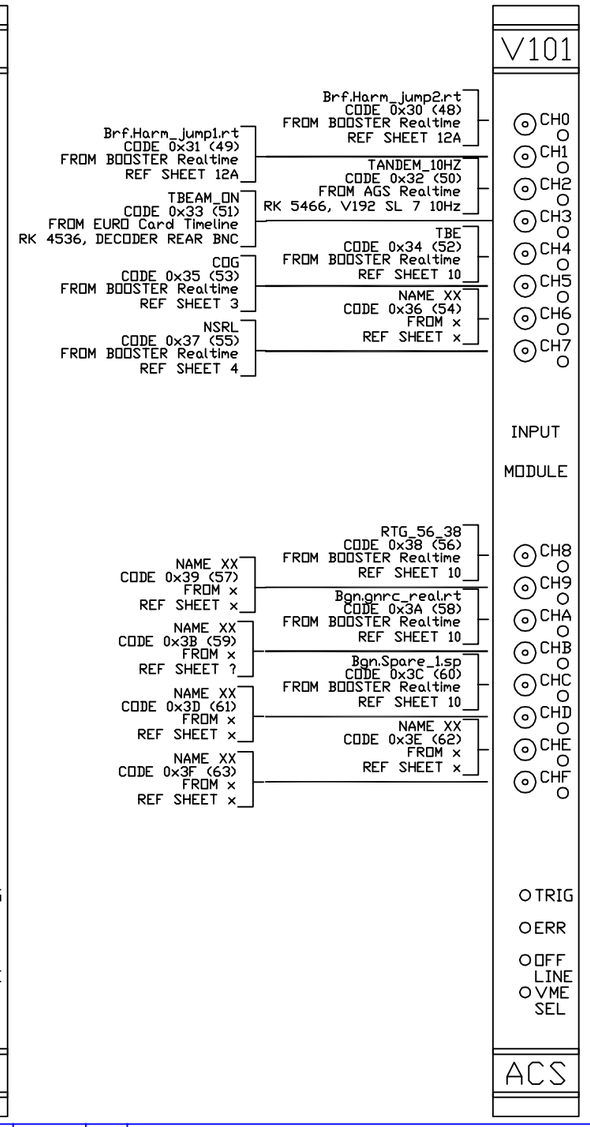

-3	-2	-1	REF DESIGNATOR	ITEM NO.	DESCRIPTION	MAT'L. DWG NO.,BNL NO.
QTY REQD						

INTERPRET IN GENERAL ACCORDANCE WITH ASME Y14.24M-1989

UNLESS OTHERWISE SPECIFIED DIMENSIONS ARE IN INCHES
DECIMAL TOLERANCES .X ±.030 .XX ±.015 .XXX ±.005
ANGULAR TOLERANCE ± .5°

OUTSTANDING ECN | NA FINISH | BREAK SHARP EDGES MAX. XX MIN. XX

Q.A. CATEGORY A-3 | DATE

DRAWN BY	Ed Koropsak	11/1/2000
CHECKED BY		
DESIGN APPROVAL		
ENGINEER APPROVAL	Wes Buxton	
SUPVR. APPROVAL		

NEXT ASSEMBLY

BROOKHAVEN NATIONAL LABORATORY
UPTON, N.Y. 11973

C-A CONTROLS WIRING DIAGRAM
BLDG 911B
BOOSTER EVENT LINK INPUTS

SIZE D | DRAWING NUMBER | REV. A
MATERIAL: ——— | SCALE: NA | WEIGHT: – | SHEET 9

Controls, bnl 10/14/2004 9:15 AM x_09.dwg

*AUTOCAD

REV.	ZONE	ECN NO.	DATE	BY	CKR	APP.

EVENT INPUT MODULE (4)

BLDG #: 911B
RACK #: 3370
CHASSIS ID: CST.911B-BSTR-EVLNK
SLOT #: 10
A16 BASE ADDRESS: 0x3A00

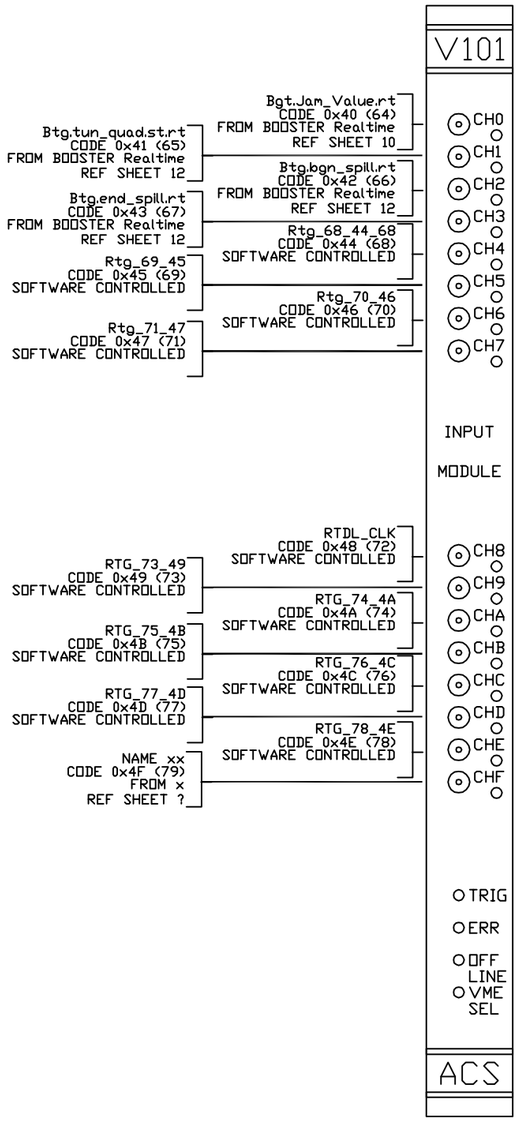

EVENT INPUT MODULE (5)

BLDG #: 911B
RACK #: 3370
CHASSIS ID: CST.911B-BSTR-EVLNK
SLOT #: 11
A16 BASE ADDRESS: 0x3A80

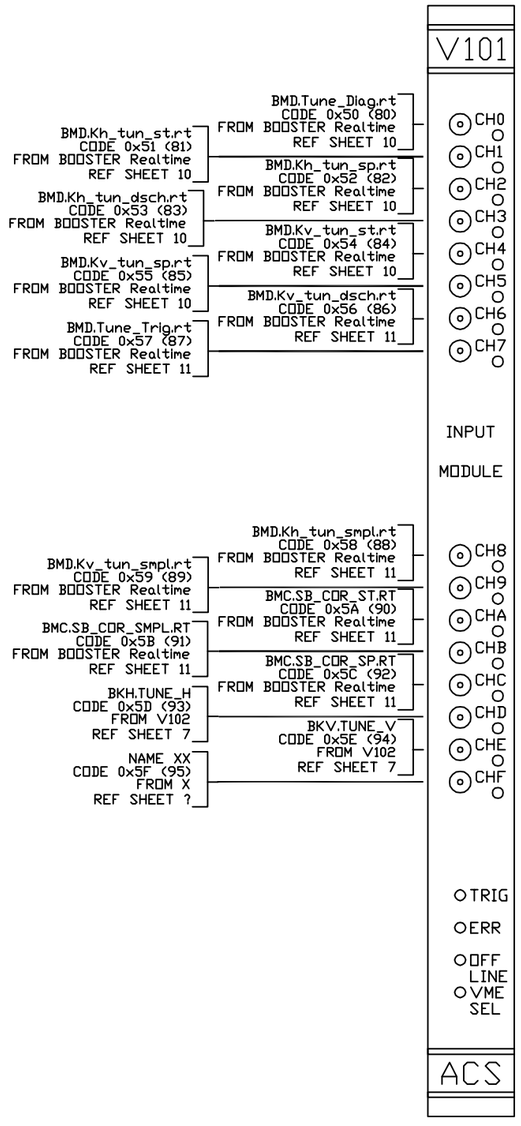

EVENT INPUT MODULE (6)

BLDG #: 911B
RACK #: 3370
CHASSIS ID: CST.911B-BSTR-EVLNK
SLOT #: 12
A16 BASE ADDRESS: 0x3B00

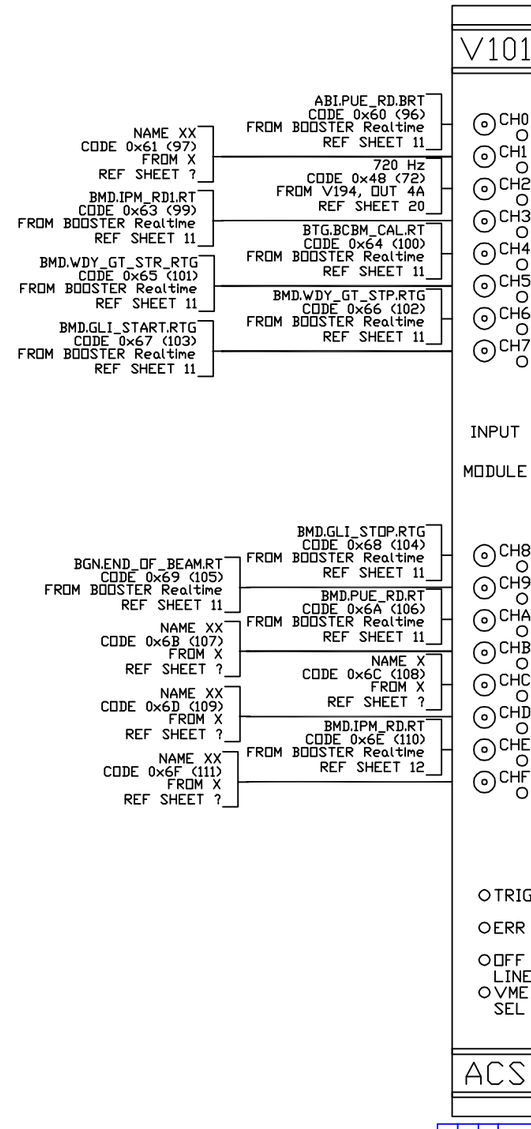

EVENT INPUT MODULE (7)

BLDG #: 911B
RACK #: 3370
CHASSIS ID: CST.911B-BSTR-EVLNK
SLOT #: 13
A16 BASE ADDRESS: 0x3B80

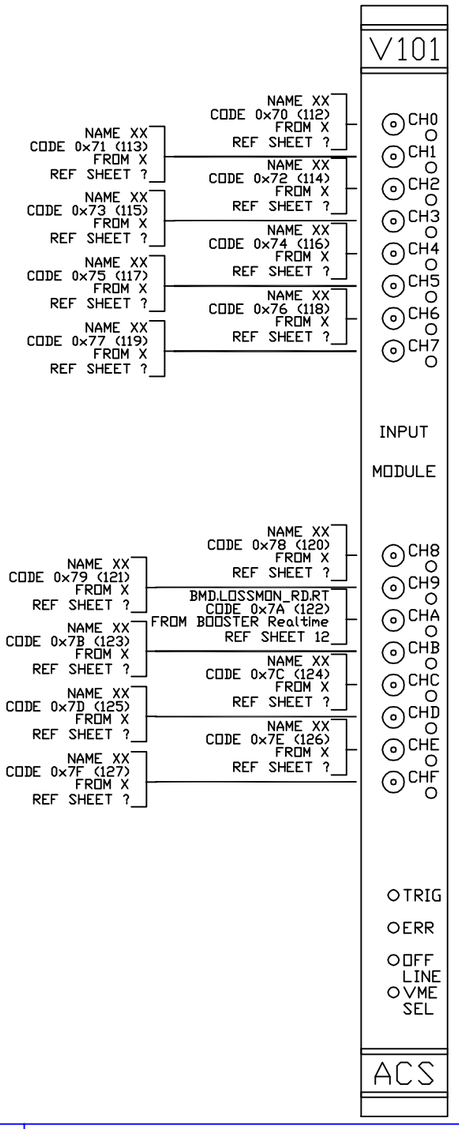

Controls, bnl 10/14/2004 9:17 AM x_10.dwg

-3	-2	-1	REF DESIGNATOR	ITEM NO.	DESCRIPTION	MAT'L. DWG NO.,BRL NO.
QTY REQD						

INTERPRET IN GENERAL ACCORDANCE WITH ASME Y14.24M-1989

UNLESS OTHERWISE SPECIFIED DIMENSIONS ARE IN INCHES
DECIMAL TOLERANCES .X ±.030 .XX ±.015 .XXX ±.005
ANGULAR TOLERANCE ± .5°

OUTSTANDING ECN | NA FINISH | BREAK SHARP EDGES MAX. XX MIN. XX

Q.A. CATEGORY A-3 | DATE

DRAWN BY	Ed Koropsak	11/1/2000
CHECKED BY		
DESIGN APPROVAL		
ENGINEER APPROVAL	Wes Buxton	
SUPVR. APPROVAL		

NEXT ASSEMBLY

BROOKHAVEN NATIONAL LABORATORY
UPTON, N.Y. 11973
C-A CONTROLS WIRING DIAGRAM
BLDG 911B
BOOSTER EVENT LINK INPUTS

SIZE D | DRAWING NUMBER | REV. A

MATERIAL: ——— SCALE: NA WEIGHT: — SHEET 10

*AUTOCAD

REV.	ZONE	ECN NO.	DATE	BY	CKR	APP.

EVENT INPUT MODULE (8)

BLDG #: 911B
RACK #: 3370
CHASSIS ID: CST.911B-BSTR-EVLNK
SLOT #: 14
A16 BASE ADDRESS: 0x3C00

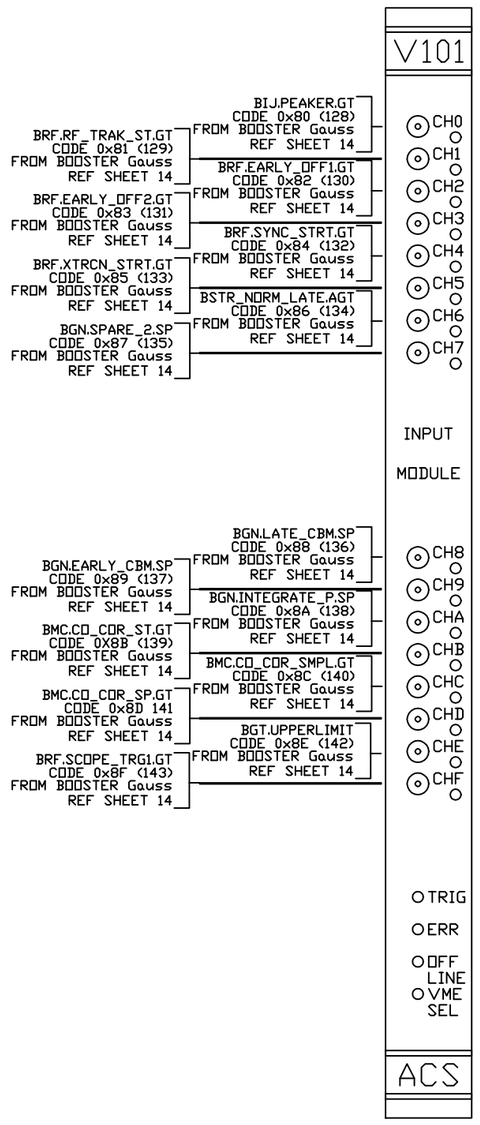

EVENT INPUT MODULE (9)

BLDG #: 911B
RACK #: 3370
CHASSIS ID: CST.911B-BSTR-EVLNK
SLOT #: 15
A16 BASE ADDRESS: 0x3C80

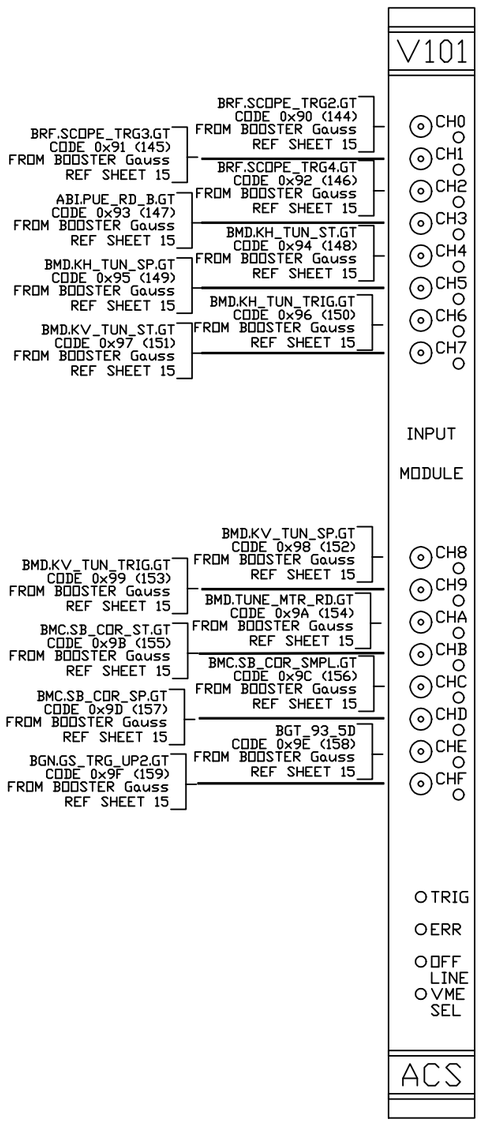

EVENT INPUT MODULE (A)

BLDG #: 911B
RACK #: 3370
CHASSIS ID: CST.911B-BSTR-EVLNK
SLOT #: 16
A16 BASE ADDRESS: 0x3D00

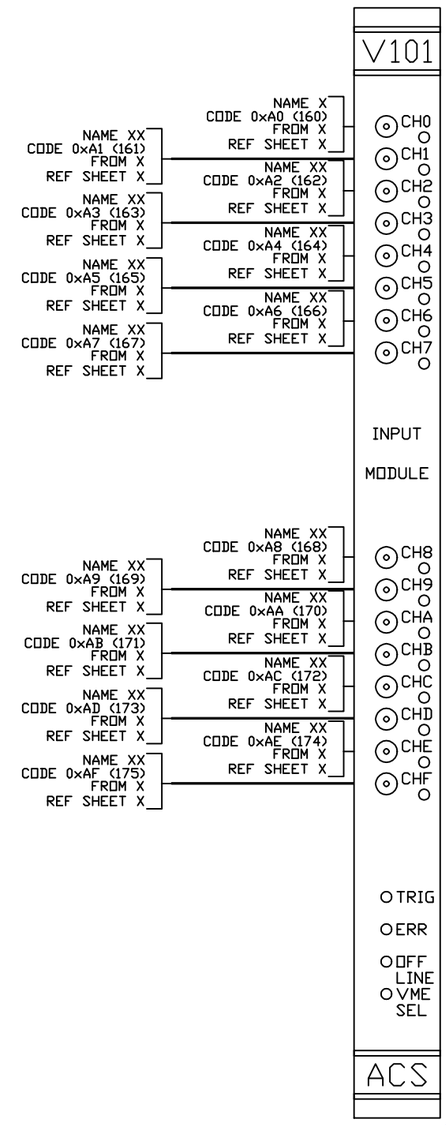

EVENT INPUT MODULE (B)

BLDG #: 911B
RACK #: 3370
CHASSIS ID: CST.911B-BSTR-EVLNK
SLOT #: 17
A16 BASE ADDRESS: 0x3D80

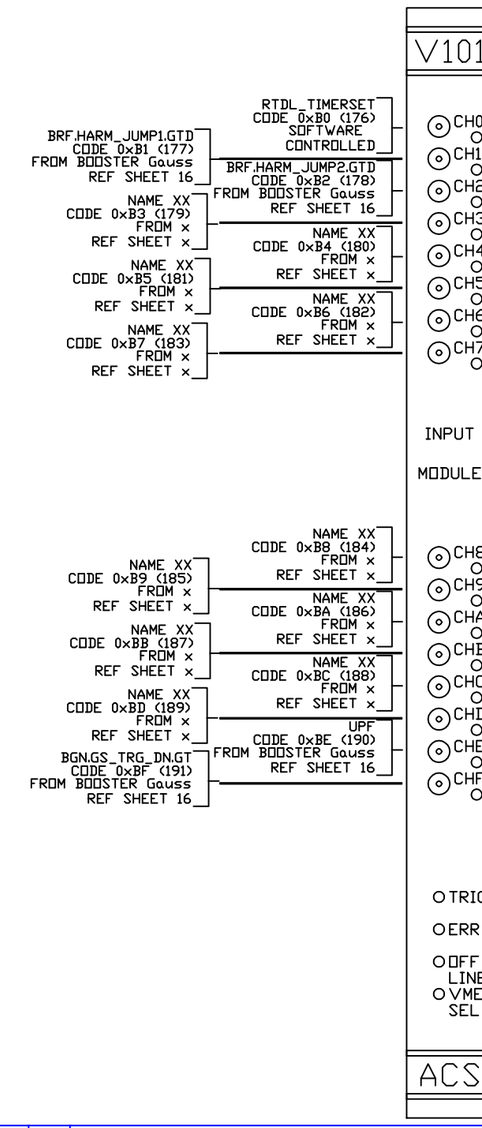

-3	-2	-1	REF DESIGNATOR	ITEM NO.	DESCRIPTION	MAT'L DWG NO.,BNL NO.
QTY REQD						

INTERPRET IN GENERAL ACCORDANCE WITH ASME Y14.24M-1989

UNLESS OTHERWISE SPECIFIED DIMENSIONS ARE IN INCHES

DECIMAL TOLERANCES
.X ±.030
.XX ±.015
.XXX ±.005
ANGULAR TOLERANCE ± .5°

NA FINISH

BREAK SHARP EDGES MAX. XX MIN. XX

OUTSTANDING ECN

Q.A. CATEGORY A-3		DATE
DRAWN BY	Ed Koropsak	11/2/2000
CHECKED BY		
DESIGN APPROVAL		
ENGINEER APPROVAL	Wes Buxton	
SUPVR. APPROVAL		

NEXT ASSEMBLY

BROOKHAVEN NATIONAL LABORATORY
UPTON, N.Y. 11973

C-A CONTROLS WIRING DIAGRAM
BLDG 911B
BOOSTER EVENT LINK INPUTS

SIZE D | DRAWING NUMBER | REV. A

MATERIAL: ——— | SCALE: NA | WEIGHT: – | SHEET 11

Schoenfeld, Controls 1/30/2004 11:10 AM x_11.dwg

*AUTOCAD

REV.	ZONE	ECN NO.	DATE	BY	CKR	APP.

EVENT INPUT MODULE (C)

BLDG #: 911B
RACK #: 3370
CHASSIS ID: CST.911B-BSTR-EVLNK
SLOT #: 18
A16 BASE ADDRESS: 0x3E00

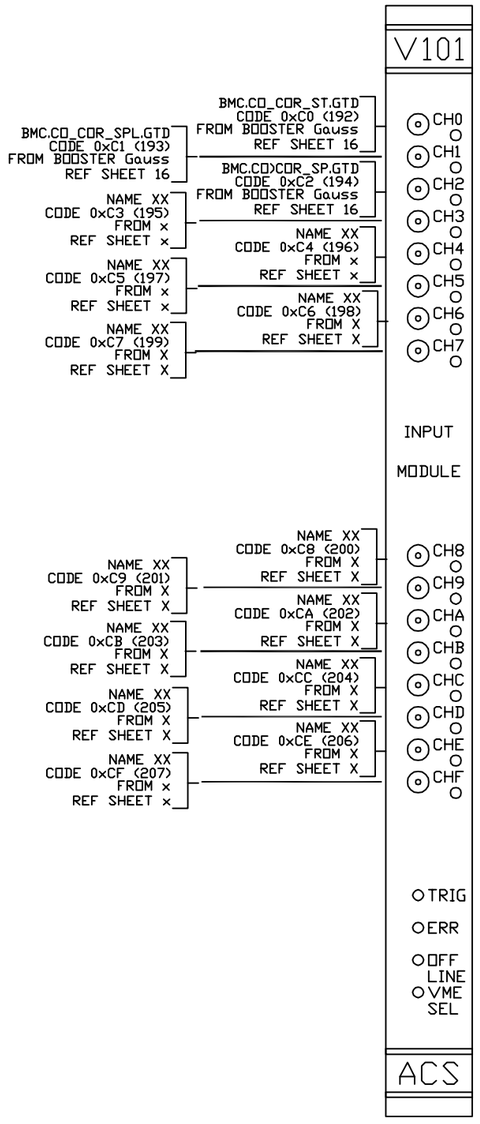

EVENT INPUT MODULE (D)

BLDG #: 911B
RACK #: 3370
CHASSIS ID: CST.911B-BSTR-EVLNK
SLOT #: 19
A16 BASE ADDRESS: 0x3E80

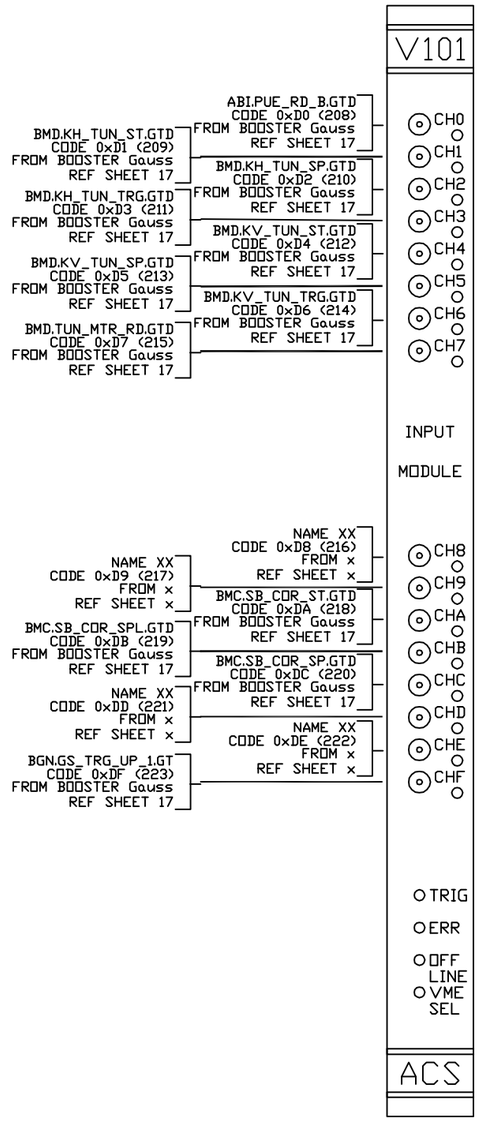

EVENT INPUT MODULE (E)

BLDG #: 911B
RACK #: 3370
CHASSIS ID: CST.911B-BSTR-EVLNK
SLOT #: 20
A16 BASE ADDRESS: 0x3F00

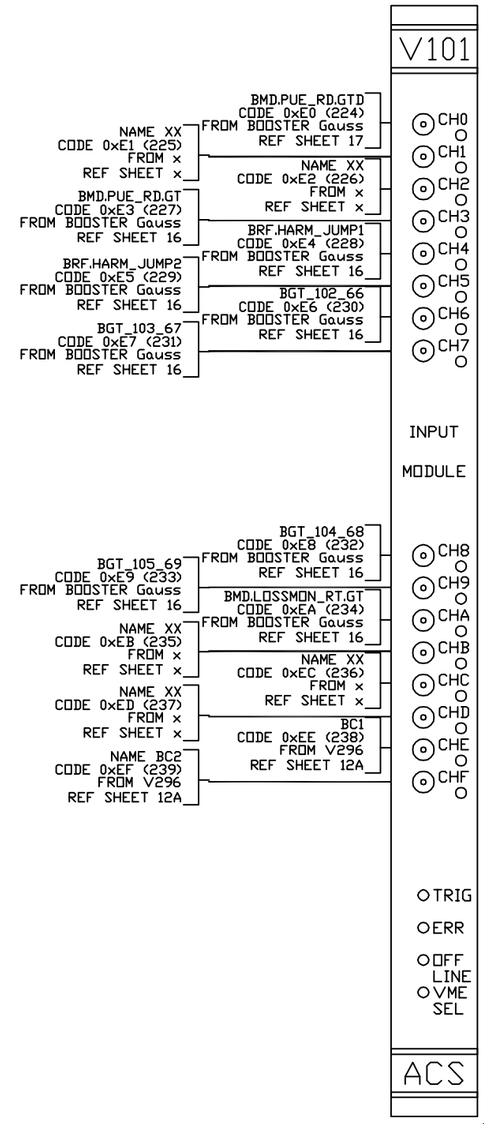

EVENT INPUT MODULE (F)

BLDG #: 911B
RACK #: 3370
CHASSIS ID: CST.911B-BSTR-EVLNK
SLOT #: 21
A16 BASE ADDRESS: 0x3F80

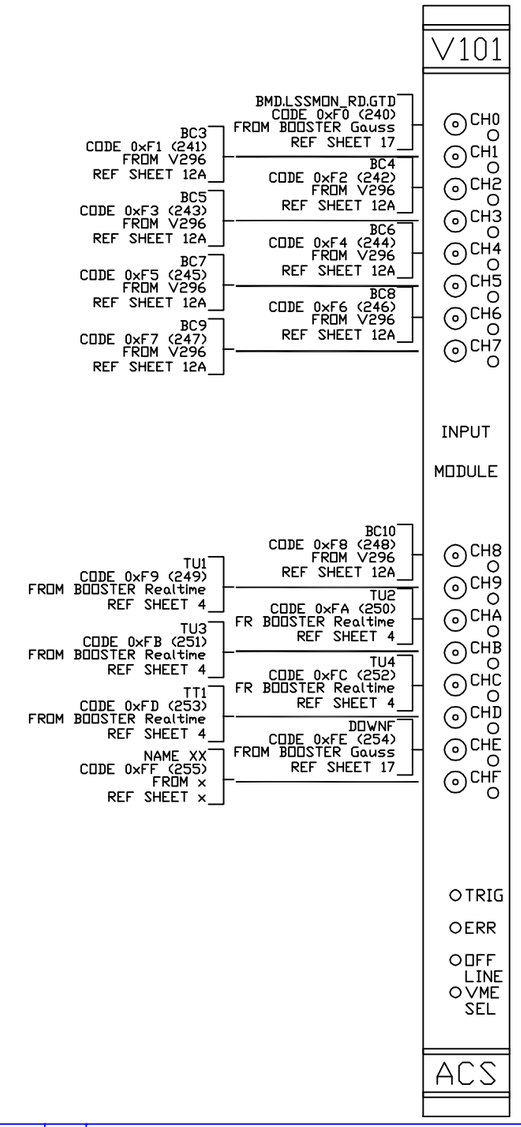

-3	-2	-1	REF DESIGNATOR	ITEM NO.	DESCRIPTION	MAT'L. DWG NO.,BRL NO.
QTY REQD						

INTERPRET IN GENERAL ACCORDANCE WITH ASME Y14.24M-1989

UNLESS OTHERWISE SPECIFIED DIMENSIONS ARE IN INCHES

DECIMAL TOLERANCES
.X ±.030
.XX ±.015
.XXX ±.005
ANGULAR TOLERANCE ± .5°

OUTSTANDING ECN: NA
FINISH: √
BREAK SHARP EDGES
MAX. XX MIN. XX

Q.A. CATEGORY A-3

		DATE
DRAWN BY	Ed Koropsak	11/2/2000
CHECKED BY		
DESIGN APPROVAL		
ENGINEER APPROVAL	Wes Buxton	
SUPVR. APPROVAL		

NEXT ASSEMBLY

BROOKHAVEN NATIONAL LABORATORY
UPTON, N.Y. 11973

C-A CONTROLS WIRING DIAGRAM
BLDG 911B
BOOSTER EVENT LINK INPUTS

SIZE: D
DRAWING NUMBER
REV.: A
MATERIAL: ——— SCALE: NA WEIGHT: — SHEET 12

Controls, bnl 10/13/2004 1:20 PM x_12.dwg

*AUTOCAD

Controls, bnl 10/13/2004 1:35 PM x_12A.dwg

REV.	ZONE	ECN NO.	DATE	BY	CKR	APP.

AGS_SUPERCYCLE_TIME

BLDG #: 911B
RACK #: 3370
CHASSIS ID: BOOSTER-RT-TIME
SLOT #: 10
A16 BASE ADDRESS: NA

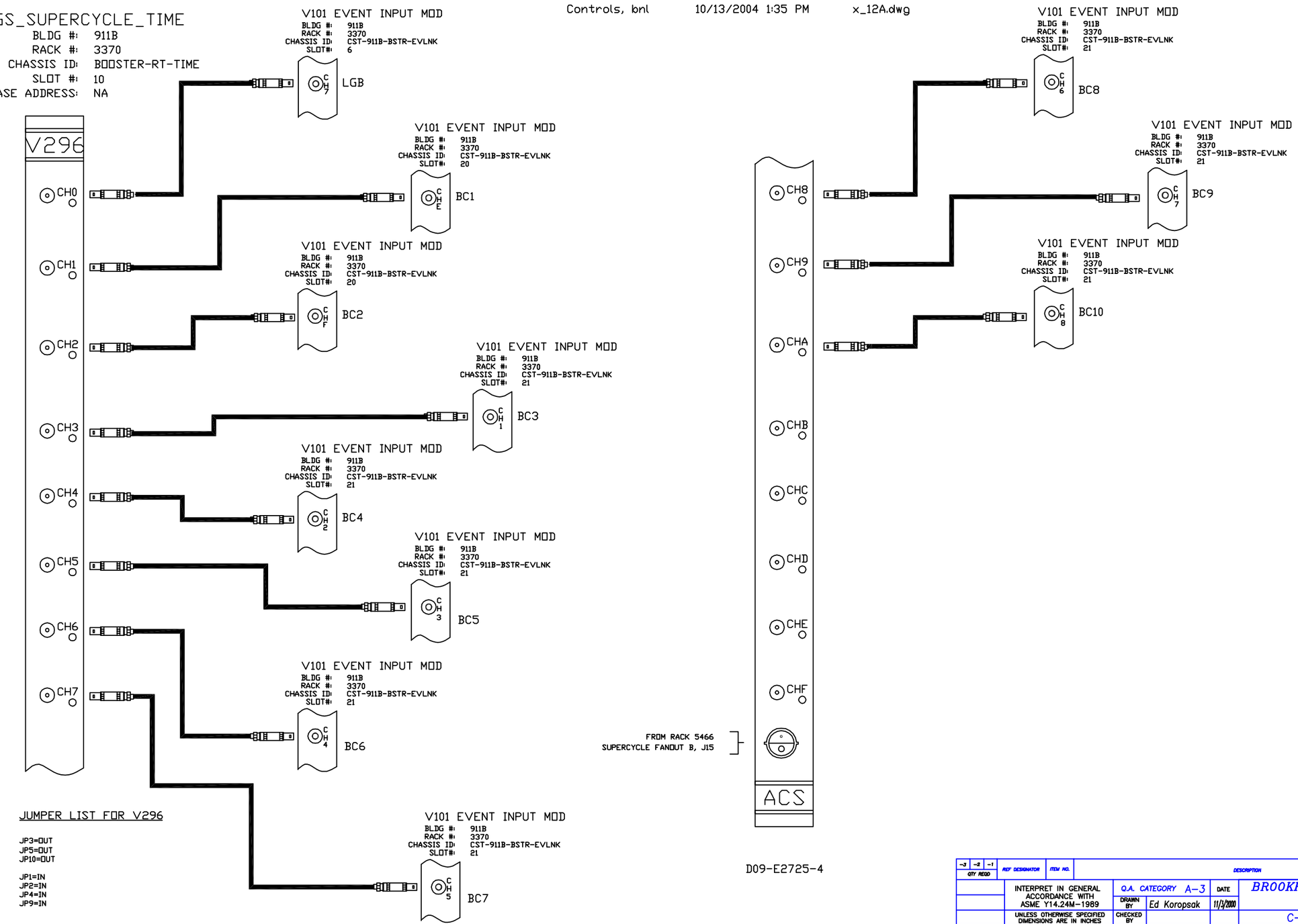

JUMPER LIST FOR V296

JP3=OUT
JP5=OUT
JP10=OUT

JP1=IN
JP2=IN
JP4=IN
JP9=IN

D09-E2725-4

-3	-2	-1	REF DESIGNATOR	ITEM NO.	DESCRIPTION	MAT'L. DWG NO.,BNL NO.
QTY REQD						

INTERPRET IN GENERAL ACCORDANCE WITH ASME Y14.24M-1989

UNLESS OTHERWISE SPECIFIED DIMENSIONS ARE IN INCHES

DECIMAL TOLERANCES
.X ±.030
.XX ±.015
.XXX ±.005
ANGULAR TOLERANCE ± .5°

NA FINISH

BREAK SHARP EDGES MAX. XX MIN. XX

OUTSTANDING ECN

Q.A. CATEGORY A-3 DATE

DRAWN BY Ed Koropsak 11/3/2000

CHECKED BY

DESIGN APPROVAL

ENGINEER APPROVAL Wes Buxton

SUPVR. APPROVAL

NEXT ASSEMBLY

BROOKHAVEN NATIONAL LABORATORY
UPTON, N.Y. 11973

C-A CONTROLS WIRING DIAGRAM

BLDG 911B

AGS SUPERCYCLE TRIGGER(SLOT10)

SIZE D DRAWING NUMBER REV. A

MATERIAL: ——— SCALE: NA WEIGHT: – SHEET 12A

1 *AUTOCAD

Schoenfeld, Controls 1/30/2004 11:08 AM x_13.dwg

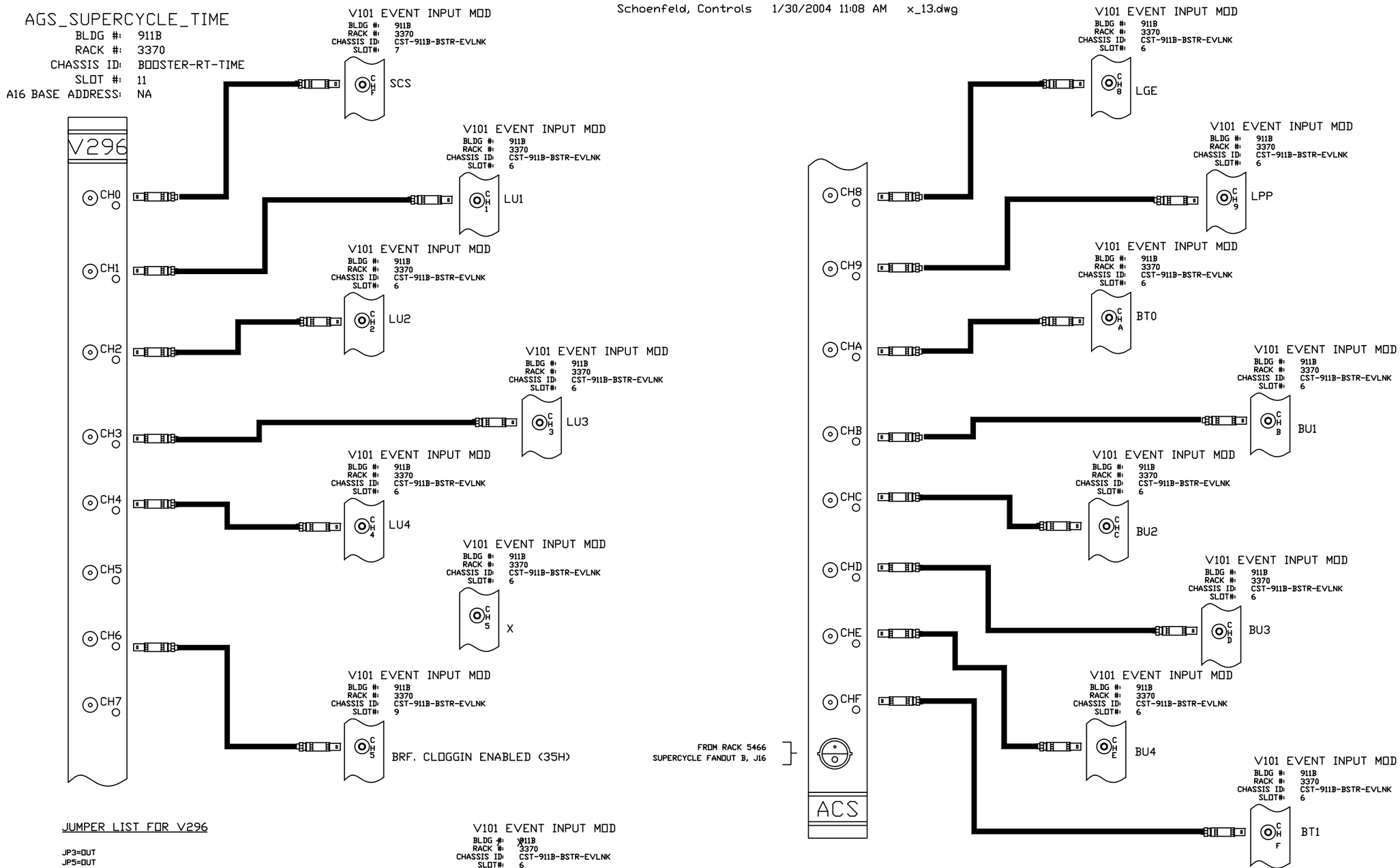

JUMPER LIST FOR V296

JP3=OUT
JP5=OUT
JP10=OUT

JP1=IN
JP2=IN
JP4=IN
JP9=IN

REV.	ZONE	ECN NO.	DATE	BY	CKR	APP.

-3	-2	-1	REF DESIGNATOR	ITEM NO.	DESCRIPTION	MAT'L. DWG NO./JRNL NO.
QTY REQD						

INTERPRET IN GENERAL ACCORDANCE WITH ASME Y14.24M-1989

UNLESS OTHERWISE SPECIFIED DIMENSIONS ARE IN INCHES

DECIMAL TOLERANCES
.X ±.030
.XX ±.015
.XXX ±.005
ANGULAR TOLERANCE
± .5°

NA FINISH

BREAK SHARP EDGES
MAX. XX MIN. XX

OUTSTANDING ECN

Q.A. CATEGORY A-3

		DATE
DRAWN BY	Ed Koropsak	11/3/2000
CHECKED BY		
DESIGN APPROVAL		
ENGINEER APPROVAL	Wes Buxton	
SUPVR. APPROVAL		

NEXT ASSEMBLY

BROOKHAVEN NATIONAL LABORATORY
UPTON, N.Y. 11973

C-A CONTROLS WIRING DIAGRAM

BLDG 911B

AGS SUPERCYCLE TRIGGER(SLOT11)

SIZE D

DRAWING NUMBER

REV. A

MATERIAL: ——— SCALE: NA WEIGHT: – SHEET 13

*AUTOCAD

Controls, bnl 10/13/2004 1:45 PM x_14.dwg

REV.	ZONE	ECN NO.	DATE	BY	CKR	APP.

AGS_SUPERCYCLE_TIME
BLDG #: 911B
RACK #: 3370
CHASSIS ID: BOOSTER_RT_TIME
SLOT #: 12
A16 BASE ADDRESS: NA

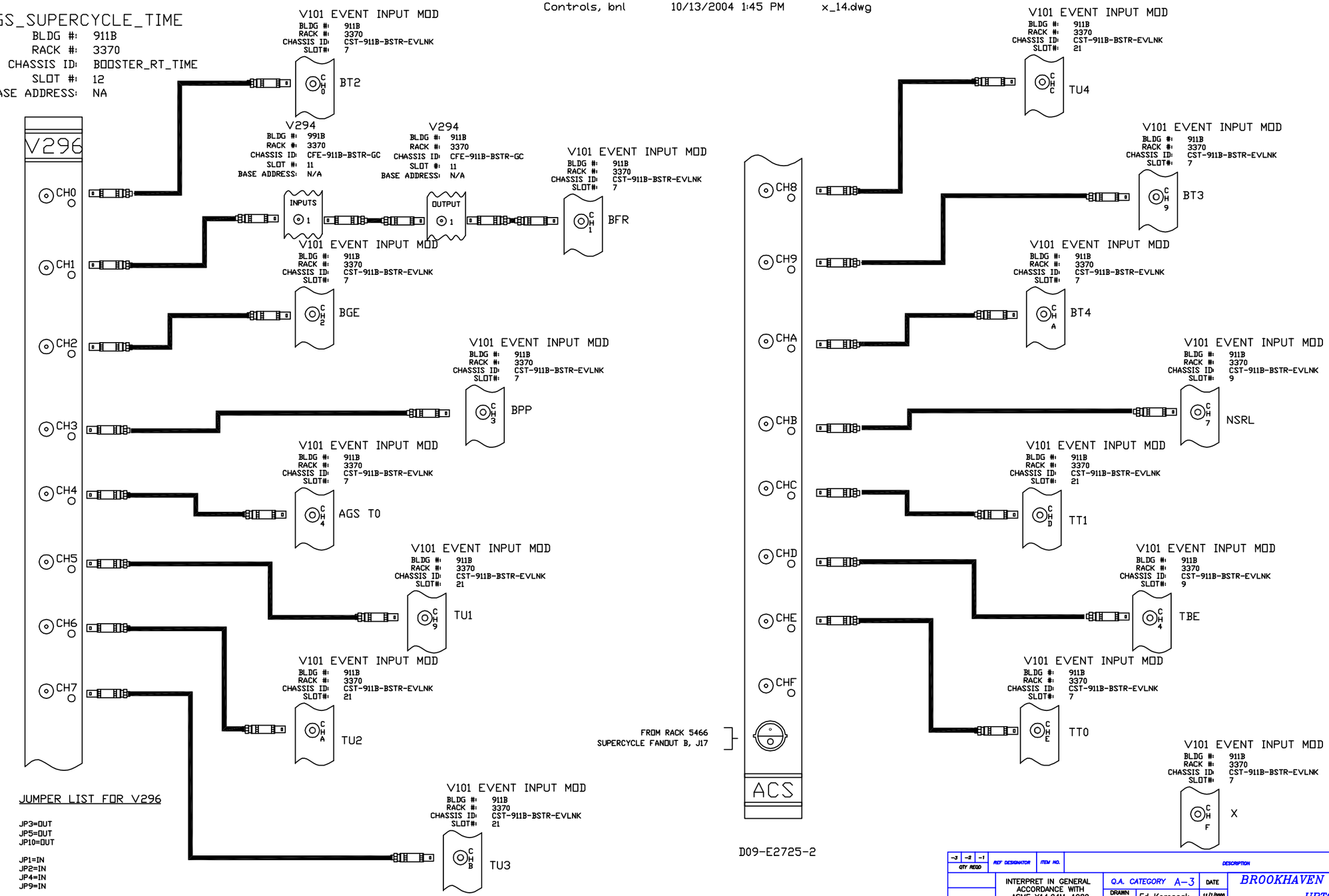

JUMPER LIST FOR V296

JP3=OUT
JP5=OUT
JP10=OUT

JP1=IN
JP2=IN
JP4=IN
JP9=IN

-3	-2	-1	REF DESIGNATOR	ITEM NO.	DESCRIPTION	MAT'L DWG NO./BNL NO.
QTY REQD						

INTERPRET IN GENERAL ACCORDANCE WITH ASME Y14.24M-1989
UNLESS OTHERWISE SPECIFIED DIMENSIONS ARE IN INCHES
DECIMAL TOLERANCES .X ±.030 .XX ±.015 .XXX ±.005
ANGULAR TOLERANCE ± .5°
OUTSTANDING ECN
NA FINISH
BREAK SHARP EDGES MAX. XX MIN. XX

Q.A. CATEGORY A-3
DRAWN BY Ed Koropsak DATE 11/3/2000
CHECKED BY
DESIGN APPROVAL
ENGINEER APPROVAL Wes Buxton
SUPVR. APPROVAL
NEXT ASSEMBLY

BROOKHAVEN NATIONAL LABORATORY
UPTON, N.Y. 11973
C-A CONTROLS WIRING DIAGRAM
BLDG 911B
AGS SUPERCYCLE TRIGGER(SLOT12)
SIZE D
DRAWING NUMBER
REV. A
MATERIAL: ——— SCALE: NA WEIGHT: – SHEET 14

*AUTOCAD

Schoenfeld, Controls 1/30/2004 11:06 AM x_15.dwg

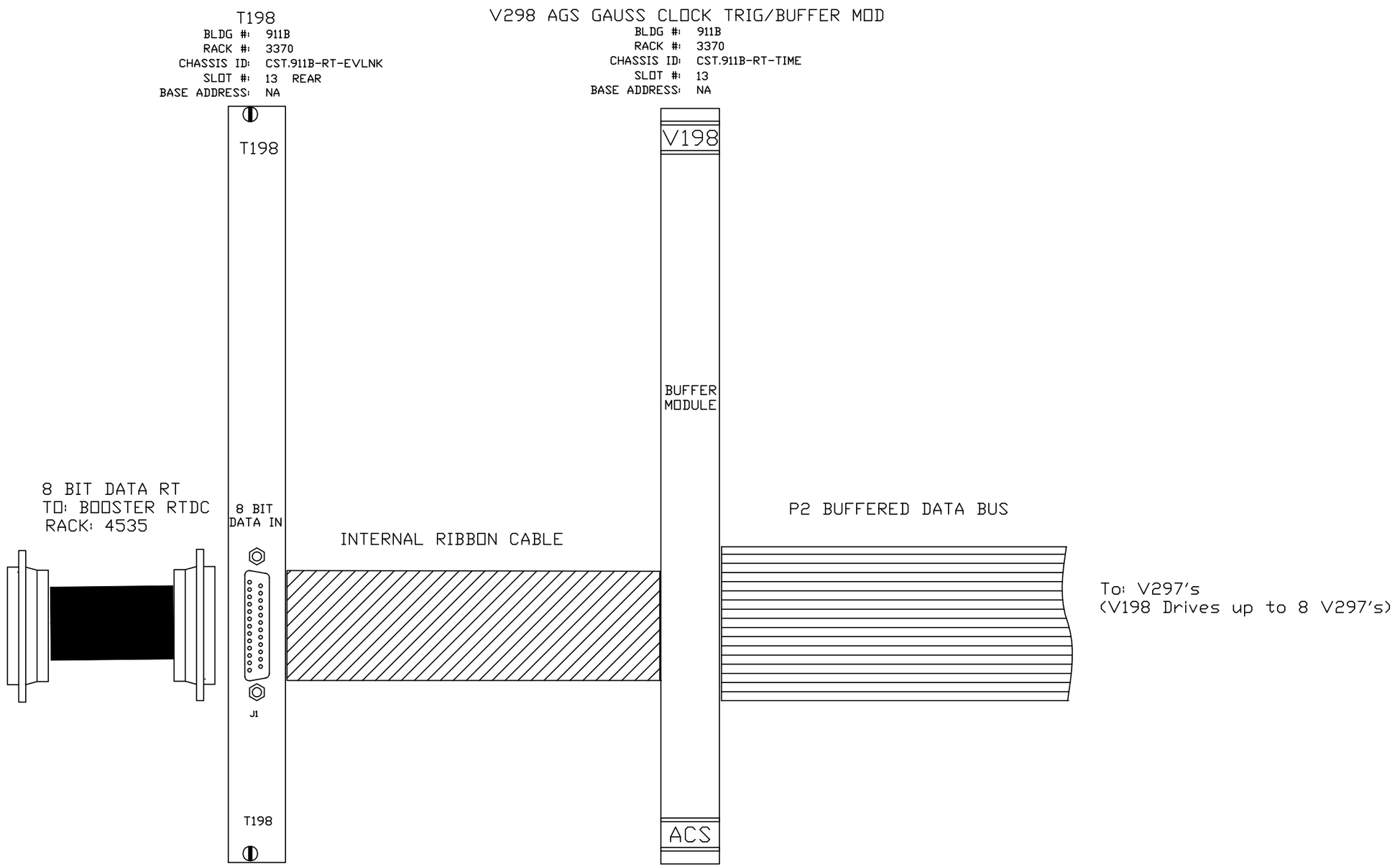

REV.	ZONE	ECN NO.	DATE	BY	CKR	APP.

-3	-2	-1	REF DESIGNATOR	ITEM NO.	DESCRIPTION	MAT'L. DWG NO.,BNL NO.
QTY REQD						

INTERPRET IN GENERAL ACCORDANCE WITH ASME Y14.24M-1989

UNLESS OTHERWISE SPECIFIED DIMENSIONS ARE IN INCHES

DECIMAL TOLERANCES
.X ±.030
.XX ±.015
.XXX ±.005
ANGULAR TOLERANCE
± .5°

NA FINISH

BREAK SHARP EDGES
MAX. XX MIN. XX

OUTSTANDING ECN

Q.A. CATEGORY A-3

		DATE
DRAWN BY	Ed Koropsak	11/3/2000
CHECKED BY		
DESIGN APPROVAL		
ENGINEER APPROVAL	Wes Buxton	
SUPVR. APPROVAL		

NEXT ASSEMBLY

BROOKHAVEN NATIONAL LABORATORY
UPTON, N.Y. 11973

C-A CONTROLS WIRING DIAGRAM

BLDG 911B

V198 REALTIME TRIG/BUFF MODULE

SIZE D | DRAWING NUMBER | REV. A

MATERIAL: ——— SCALE: NA WEIGHT: – SHEET 15

*AUTOCAD

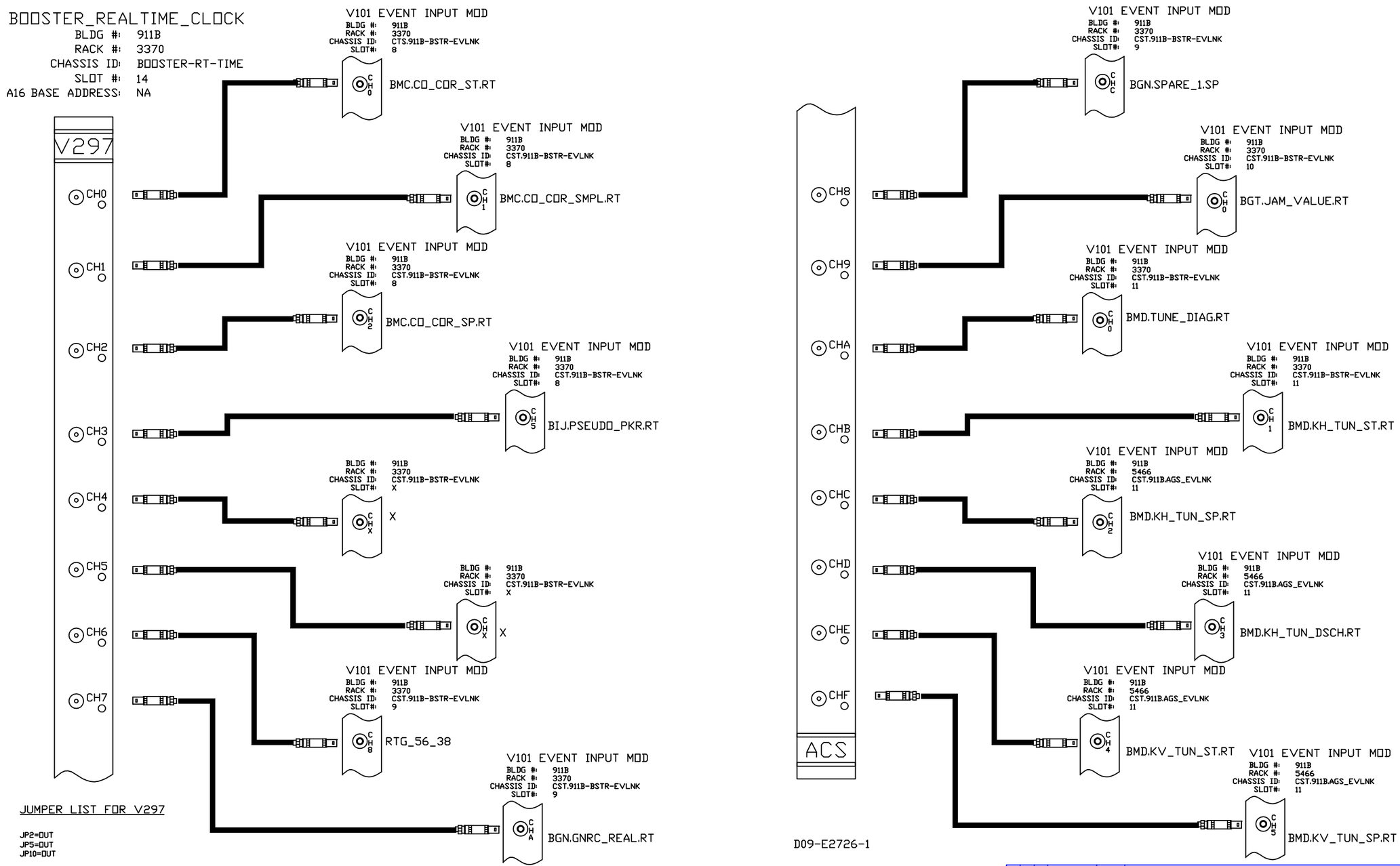

REV.	ZONE	ECN NO.	DATE	BY	CKR	APP.

-3	-2	-1	REF DESIGNATOR	ITEM NO.	DESCRIPTION	MAT'L. DWG NO./JINL NO.
QTY REQD						

INTERPRET IN GENERAL ACCORDANCE WITH ASME Y14.24M-1989

UNLESS OTHERWISE SPECIFIED DIMENSIONS ARE IN INCHES

DECIMAL TOLERANCES
.X ±.030
.XX ±.015
.XXX ±.005
ANGULAR TOLERANCE ± .5°

NA FINISH

BREAK SHARP EDGES MAX. XX MIN. XX

OUTSTANDING ECN

Q.A. CATEGORY A-3		DATE
DRAWN BY	Ed Koropsak	11/3/2000
CHECKED BY		
DESIGN APPROVAL		
ENGINEER APPROVAL	Wes Buxton	
SUPVR. APPROVAL		
NEXT ASSEMBLY		

BROOKHAVEN NATIONAL LABORATORY
UPTON, N.Y. 11973

C-A CONTROLS WIRING DIAGRAM

BLDG 911B

BOOSTER RT CLOCK (SLOT 14)

SIZE D | DRAWING NUMBER | REV. A

MATERIAL: ——— | SCALE: NA | WEIGHT: – | SHEET 16

Schoenfeld, Controls 1/30/2004 11:04 AM x_16.dwg

*AUTOCAD

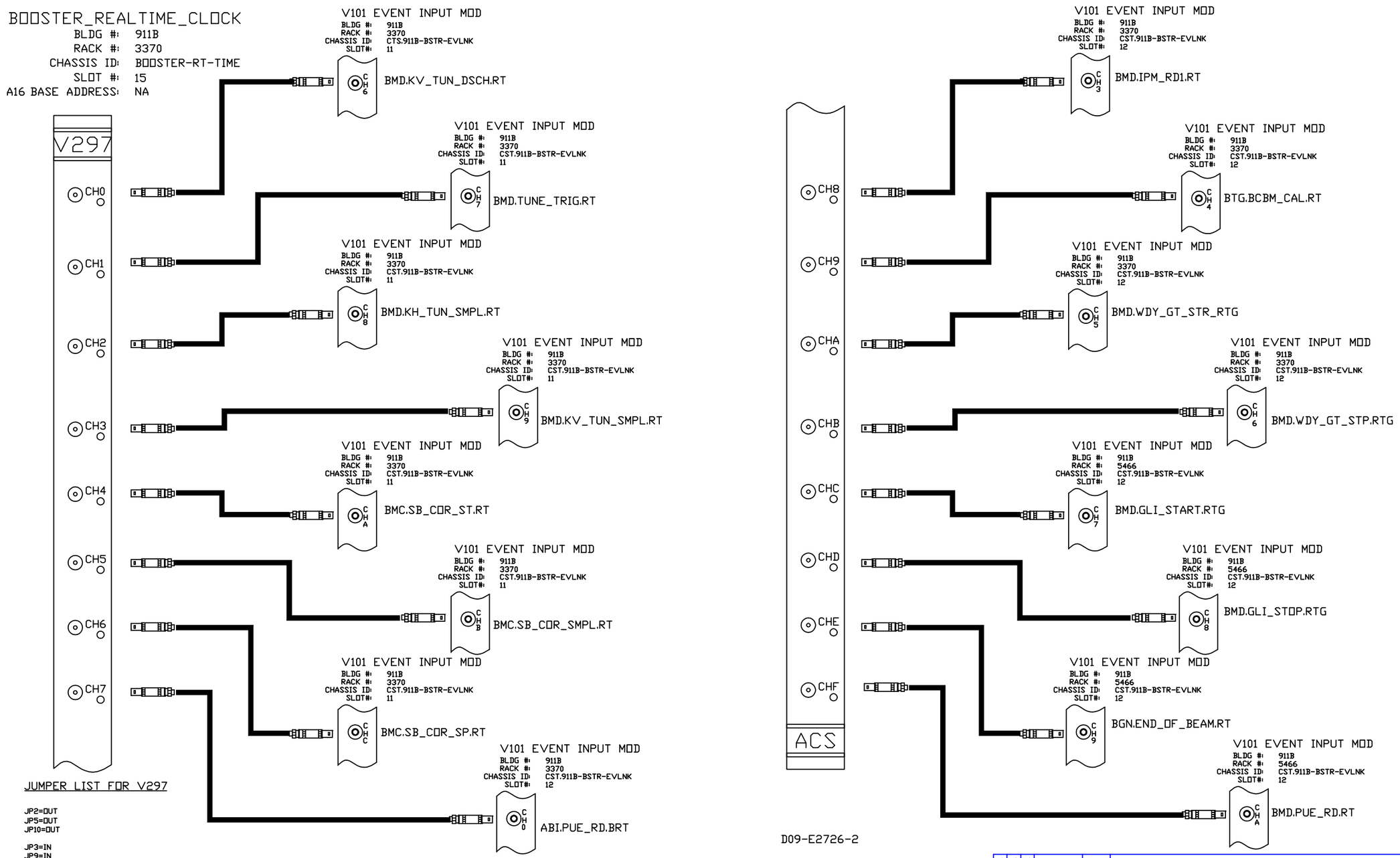

REV.	ZONE	ECN NO.	DATE	BY	CKR	APP.

-3	-2	-1	REF DESIGNATOR	ITEM NO.	DESCRIPTION	MAT'L. DWG NO./JINL NO.
QTY REQD						

INTERPRET IN GENERAL ACCORDANCE WITH ASME Y14.24M-1989

UNLESS OTHERWISE SPECIFIED DIMENSIONS ARE IN INCHES

DECIMAL TOLERANCES
.X ±.030
.XX ±.015
.XXX ±.005
ANGULAR TOLERANCE ± .5°

NA FINISH

BREAK SHARP EDGES MAX. XX MIN. XX

OUTSTANDING ECN

Q.A. CATEGORY A-3		DATE
DRAWN BY	Ed Koropsak	11/3/2000
CHECKED BY		
DESIGN APPROVAL		
ENGINEER APPROVAL	Wes Buxton	
SUPVR. APPROVAL		

NEXT ASSEMBLY

BROOKHAVEN NATIONAL LABORATORY
UPTON, N.Y. 11973

C-A CONTROLS WIRING DIAGRAM

BLDG 911B

BOOSTER RT CLOCK (SLOT 15)

SIZE D | DRAWING NUMBER | REV. A

MATERIAL: ——— | SCALE: NA | WEIGHT: – | SHEET 17

Schoenfeld, Controls 1/30/2004 11:03 AM x_17.dwg

*AUTOCAD

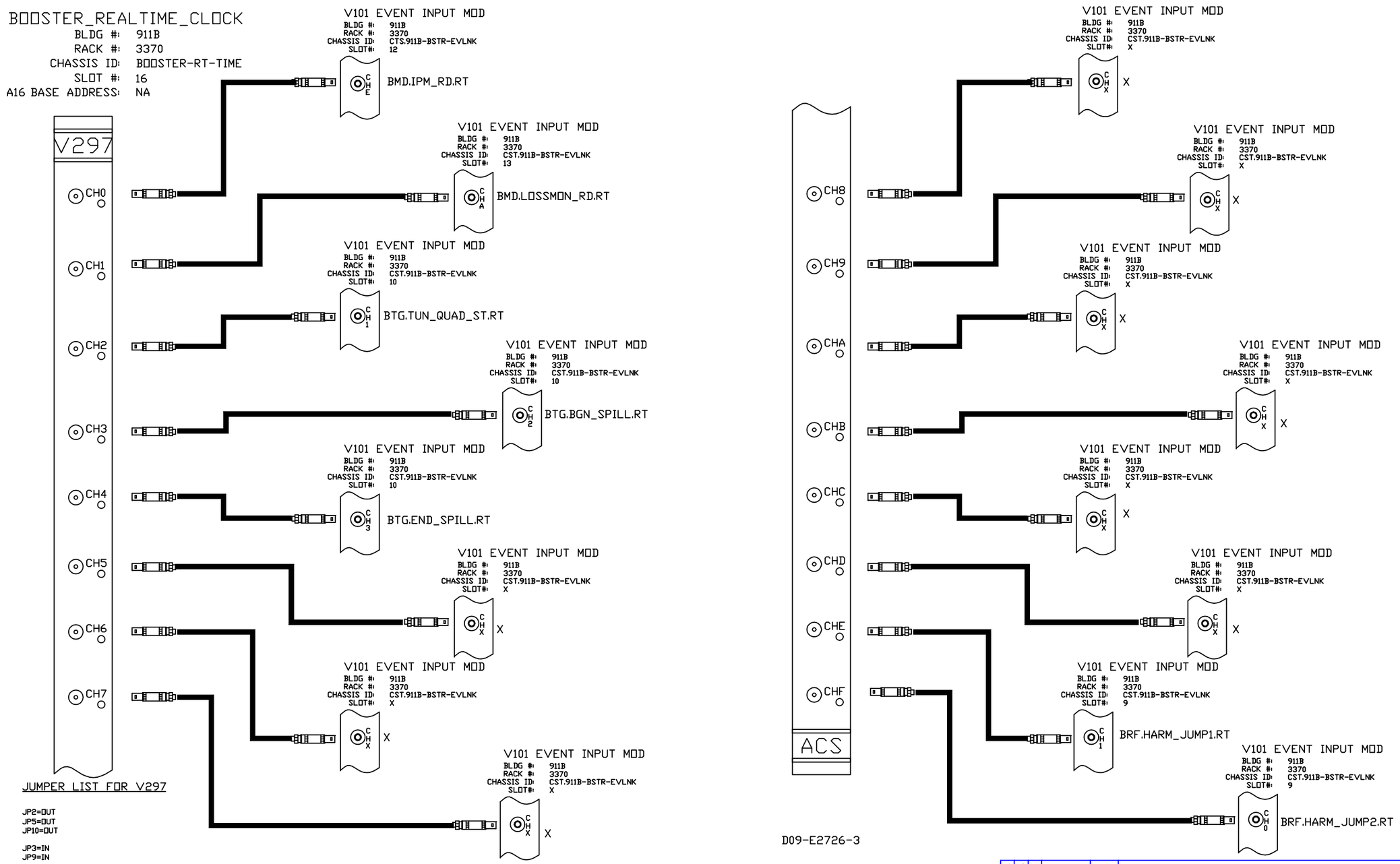

JUMPER LIST FOR V297

JP2=OUT
JP5=OUT
JP10=OUT

JP3=IN
JP9=IN

REV.	ZONE	ECN NO.	DATE	BY	CKR	APP.

QTY REQD -3	-2	-1	REF DESIGNATOR	ITEM NO.	DESCRIPTION	MAT'L. DWG NO./JINL NO.

INTERPRET IN GENERAL ACCORDANCE WITH ASME Y14.24M-1989

UNLESS OTHERWISE SPECIFIED DIMENSIONS ARE IN INCHES

DECIMAL TOLERANCES
.X ±.030
.XX ±.015
.XXX ±.005
ANGULAR TOLERANCE ± .5°

OUTSTANDING ECN | NA FINISH | BREAK SHARP EDGES | MAX. XX MIN. XX

Q.A. CATEGORY	A-3	DATE	
DRAWN BY	Ed Koropsak	11/3/2000	
CHECKED BY			
DESIGN APPROVAL			
ENGINEER APPROVAL	Wes Buxton		
SUPVR. APPROVAL			

NEXT ASSEMBLY

BROOKHAVEN NATIONAL LABORATORY
UPTON, N.Y. 11973

C-A CONTROLS WIRING DIAGRAM
BLDG 911B
BOOSTER RT CLOCK (SLOT 16)

SIZE D | DRAWING NUMBER | REV. A

MATERIAL: ——— | SCALE: NA | WEIGHT: – | SHEET 18

Schoenfeld, Controls 1/30/2004 11:03 AM x_18.dwg

*AUTOCAD

REV.	ZONE	ECN NO.	DATE	BY	CKR	APP.

BOOSTER_REALTIME_CLOCK

BLDG #: 911B
RACK #: 3370
CHASSIS ID: BOOSTER-RT-TIME
SLOT #: 17
A16 BASE ADDRESS: NA

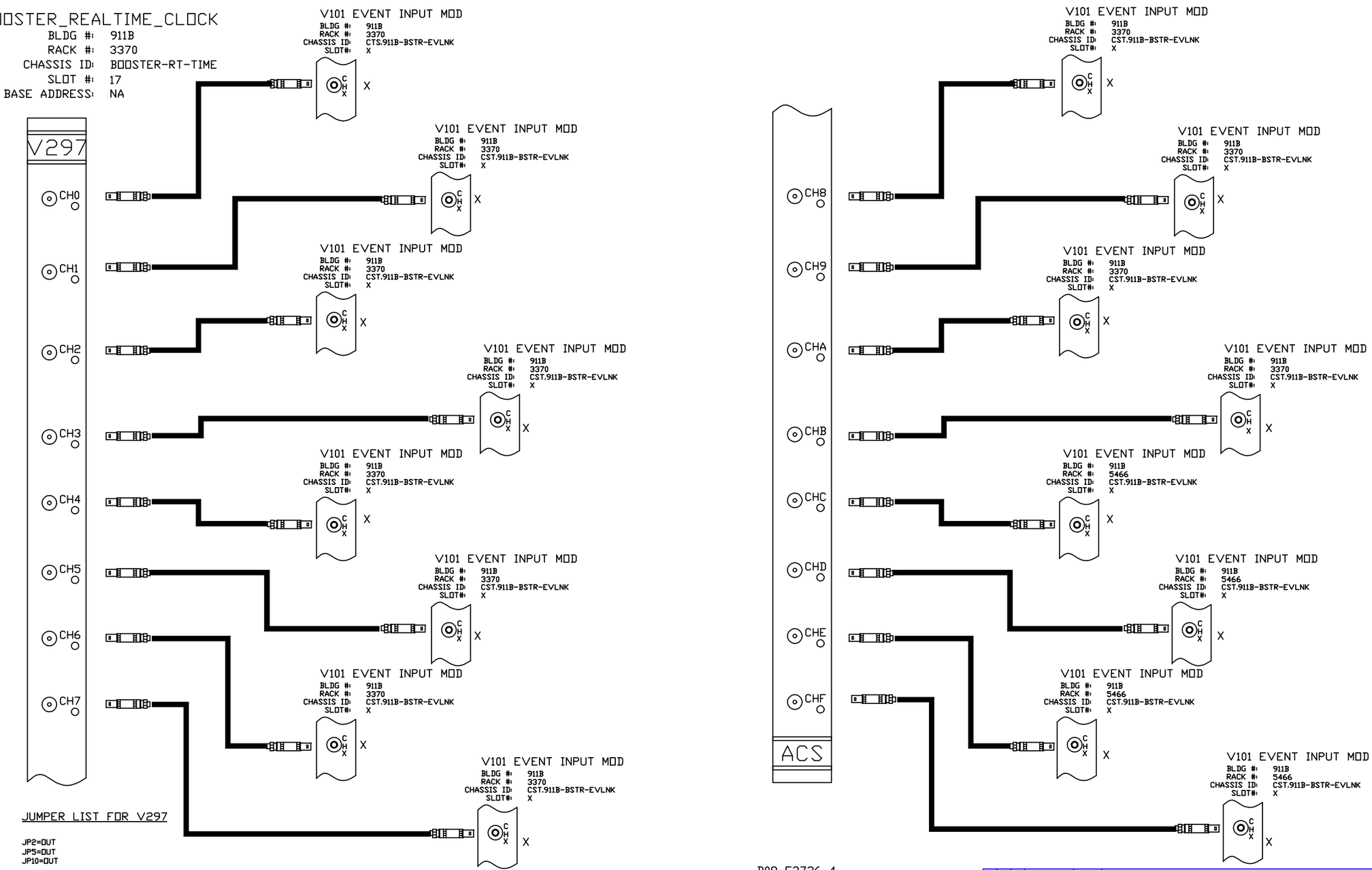

JUMPER LIST FOR V297

JP2=OUT
JP5=OUT
JP10=OUT

JP3=IN
JP9=IN

D09-E2726-4

-3	-2	-1	REF DESIGNATOR	ITEM NO.	DESCRIPTION	MAT'L. DWG NO./JINL NO.
QTY REQD						

INTERPRET IN GENERAL ACCORDANCE WITH ASME Y14.24M-1989

UNLESS OTHERWISE SPECIFIED DIMENSIONS ARE IN INCHES

DECIMAL TOLERANCES
.X ±.030
.XX ±.015
.XXX ±.005
ANGULAR TOLERANCE ± .5°

NA FINISH

BREAK SHARP EDGES
MAX. XX MIN. XX

OUTSTANDING ECN

Q.A. CATEGORY A-3		DATE
DRAWN BY	Ed Koropsak	11/3/2000
CHECKED BY		
DESIGN APPROVAL		
ENGINEER APPROVAL	Wes Buxton	
SUPVR. APPROVAL		
NEXT ASSEMBLY		

BROOKHAVEN NATIONAL LABORATORY
UPTON, N.Y. 11973

C-A CONTROLS WIRING DIAGRAM

BLDG 911B

BOOSTER RT CLOCK (SLOT 17)

SIZE D | DRAWING NUMBER | REV. A

MATERIAL: ——— | SCALE: NA | WEIGHT: – | SHEET 19

Schoenfeld, Controls 1/30/2004 11:02 AM x_19.dwg

*AUTOCAD

Controls, bnl 10/14/2004 9:23 AM x_20.dwg

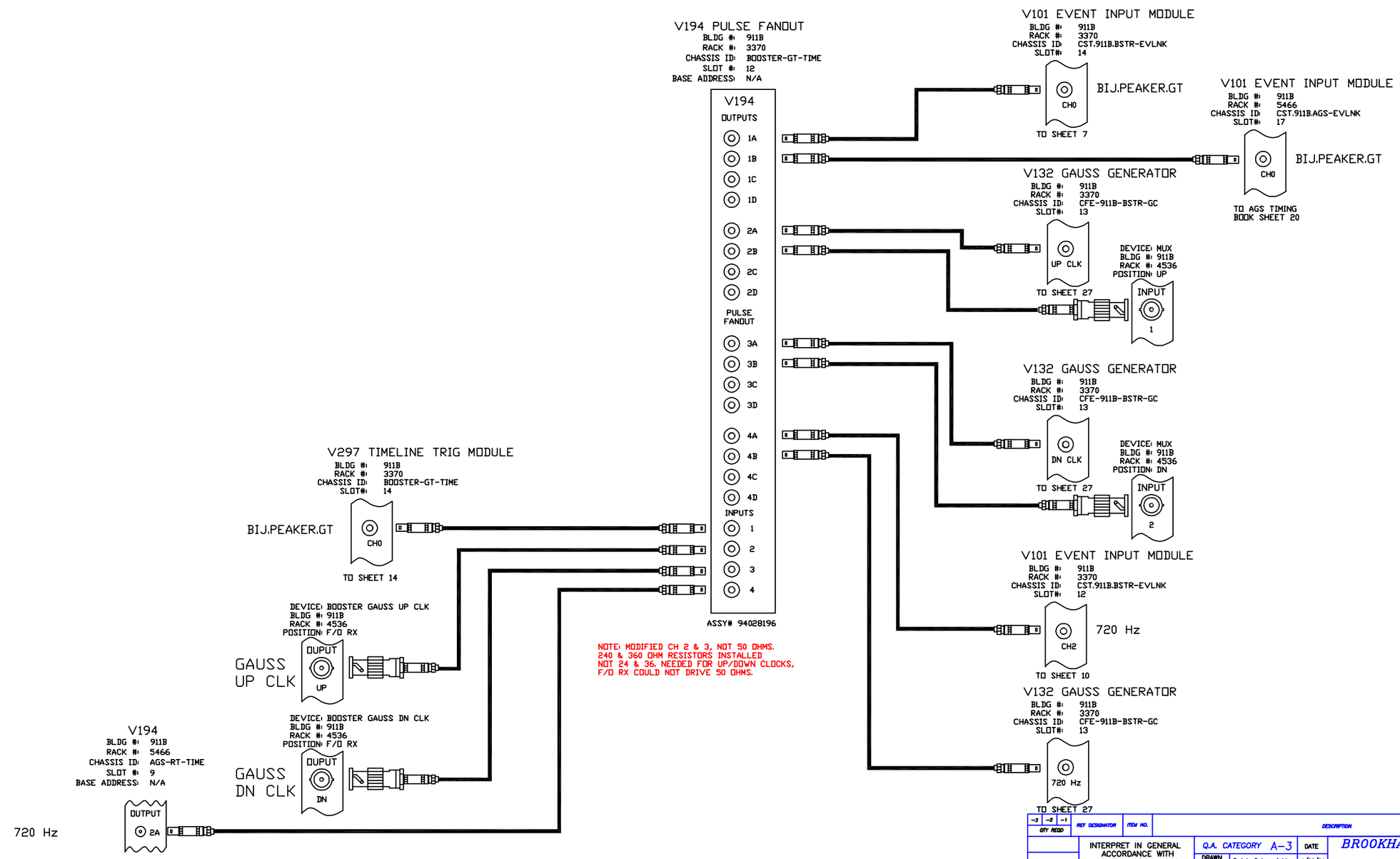

REV.	ZONE	ECN NO.	DATE	BY	CKR	APP.

-3	-2	-1	REF. DESIGNATOR	ITEM NO.	DESCRIPTION	MAT'L. DWG NO./BAL. NO.
QTY REQD						

INTERPRET IN GENERAL ACCORDANCE WITH ASME Y14.24M-1989

UNLESS OTHERWISE SPECIFIED DIMENSIONS ARE IN INCHES

DECIMAL TOLERANCES
.X ±.030
.XX ±.015
.XXX ±.005
ANGULAR TOLERANCE ± .5°

OUTSTANDING ECN

NA FINISH

BREAK SHARP EDGES MAX. XX MIN. XX

Q.A. CATEGORY A-3		DATE
DRAWN BY	Ralph Schoenfeld	1/29/04
CHECKED BY		
DESIGN APPROVAL		
ENGINEER APPROVAL		
SUPVR. APPROVAL		

NEXT ASSEMBLY

BROOKHAVEN NATIONAL LABORATORY
ASSOCIATED UNIVERSITIES, INC.
UPTON, N.Y. 11973

CONTROLS WIRING DIAGRAM

BLDG 911B, CHASSIS CST-911B-BSTR-EVLNK

V194 PULSE FANOUT

SIZE D | DRAWING NUMBER | REV. A

MATERIAL: ——— SCALE: NA WEIGHT: — SHEET 20

*AUTOCAD

REV.	ZONE	ECN NO.	DATE	BY	CKR	APP.

Controls, bnl 10/13/2004 2:40 PM x_21.dwg

-3	-2	-1	REF DESIGNATOR	ITEM NO.	DESCRIPTION	MAT'L DWG NO.,SPEC. NO.
QTY REQD						

INTERPRET IN GENERAL ACCORDANCE WITH ASME Y14.24M-1989

UNLESS OTHERWISE SPECIFIED DIMENSIONS ARE IN INCHES

DECIMAL TOLERANCES
.X ±.030
.XX ±.015
.XXX ±.005
ANGULAR TOLERANCE
± .5°

OUTSTANDING ECN

NA FINISH

BREAK SHARP EDGES
MAX. XX MIN. XX

Q.A. CATEGORY A-3		DATE
DRAWN BY	Ed Koropsak	11/2/2000
CHECKED BY		
DESIGN APPROVAL		
ENGINEER APPROVAL	Wes Buxton	
SUPVR. APPROVAL		

NEXT ASSEMBLY

BROOKHAVEN NATIONAL LABORATORY
UPTON, N.Y. 11973

C-A CONTROLS WIRING DIAGRAM

BLDG 911B

BLANK PAGE

SIZE D | DRAWING NUMBER | REV. A

MATERIAL: ——— SCALE: NA WEIGHT: – SHEET 21

*AUTOCAD

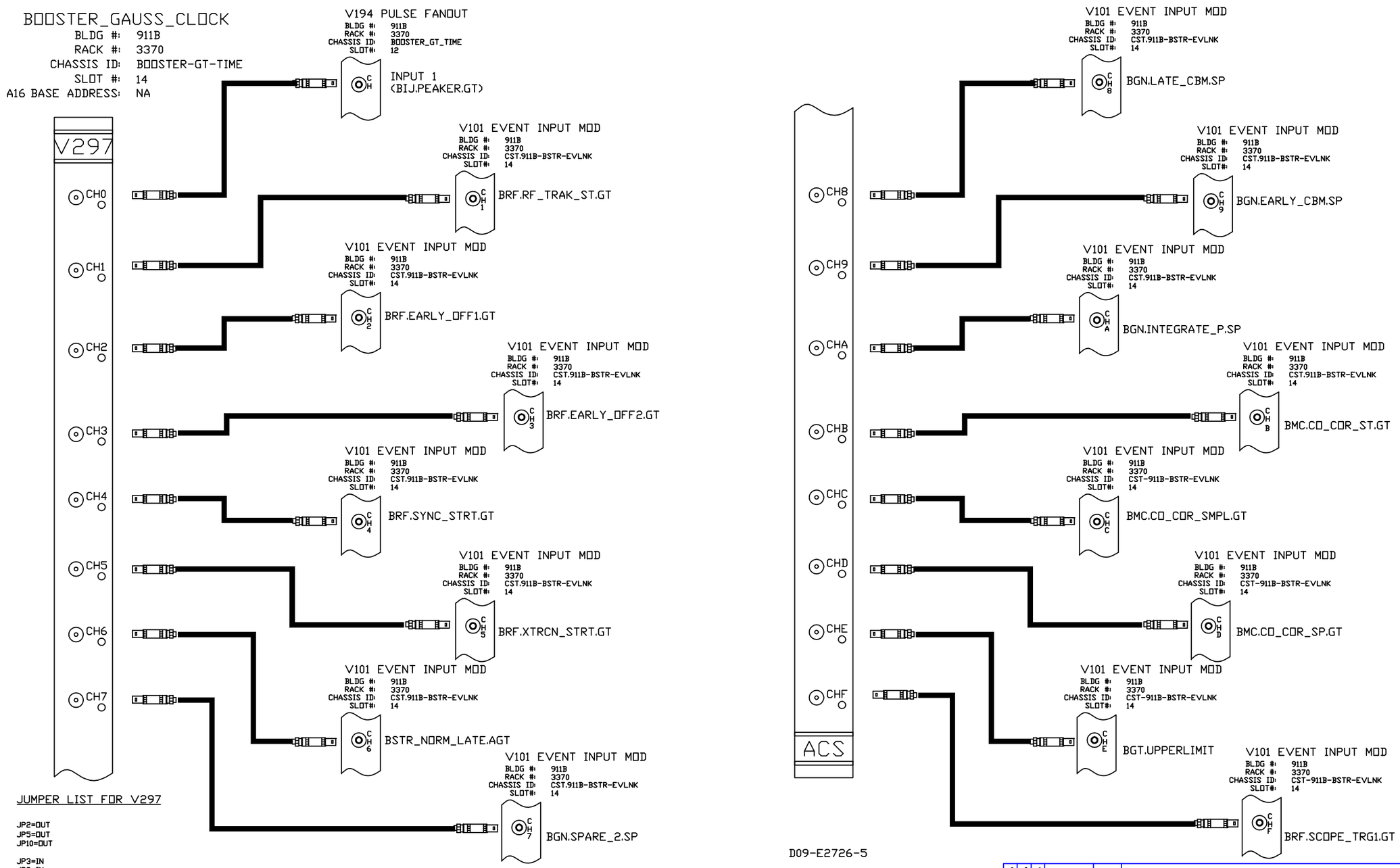

REV.	ZONE	ECN NO.	DATE	BY	CKR	APP.

-3	-2	-1	REF DESIGNATOR	ITEM NO.	DESCRIPTION	MAT'L. DWG NO./INL NO.
QTY REQD						

INTERPRET IN GENERAL ACCORDANCE WITH ASME Y14.24M-1989

UNLESS OTHERWISE SPECIFIED DIMENSIONS ARE IN INCHES

DECIMAL TOLERANCES
.X ±.030
.XX ±.015
.XXX ±.005
ANGULAR TOLERANCE ± .5°

NA FINISH

BREAK SHARP EDGES

MAX. XX MIN. XX

OUTSTANDING ECN

Q.A. CATEGORY A-3		DATE
DRAWN BY	Ed Koropsak	11/2/2000
CHECKED BY		
DESIGN APPROVAL		
ENGINEER APPROVAL	Wes Buxton	
SUPVR. APPROVAL		

NEXT ASSEMBLY

BROOKHAVEN NATIONAL LABORATORY
UPTON, N.Y. 11973

C-A CONTROLS WIRING DIAGRAM

BLDG 911B

BOOSTER GAUSS CLOCK (SLOT 14)

SIZE D | DRAWING NUMBER | REV. A

MATERIAL: ——— | SCALE: NA | WEIGHT: – | SHEET 22

Schoenfeld, Controls 1/30/2004 10:49 AM x_20.dwg

*AUTOCAD

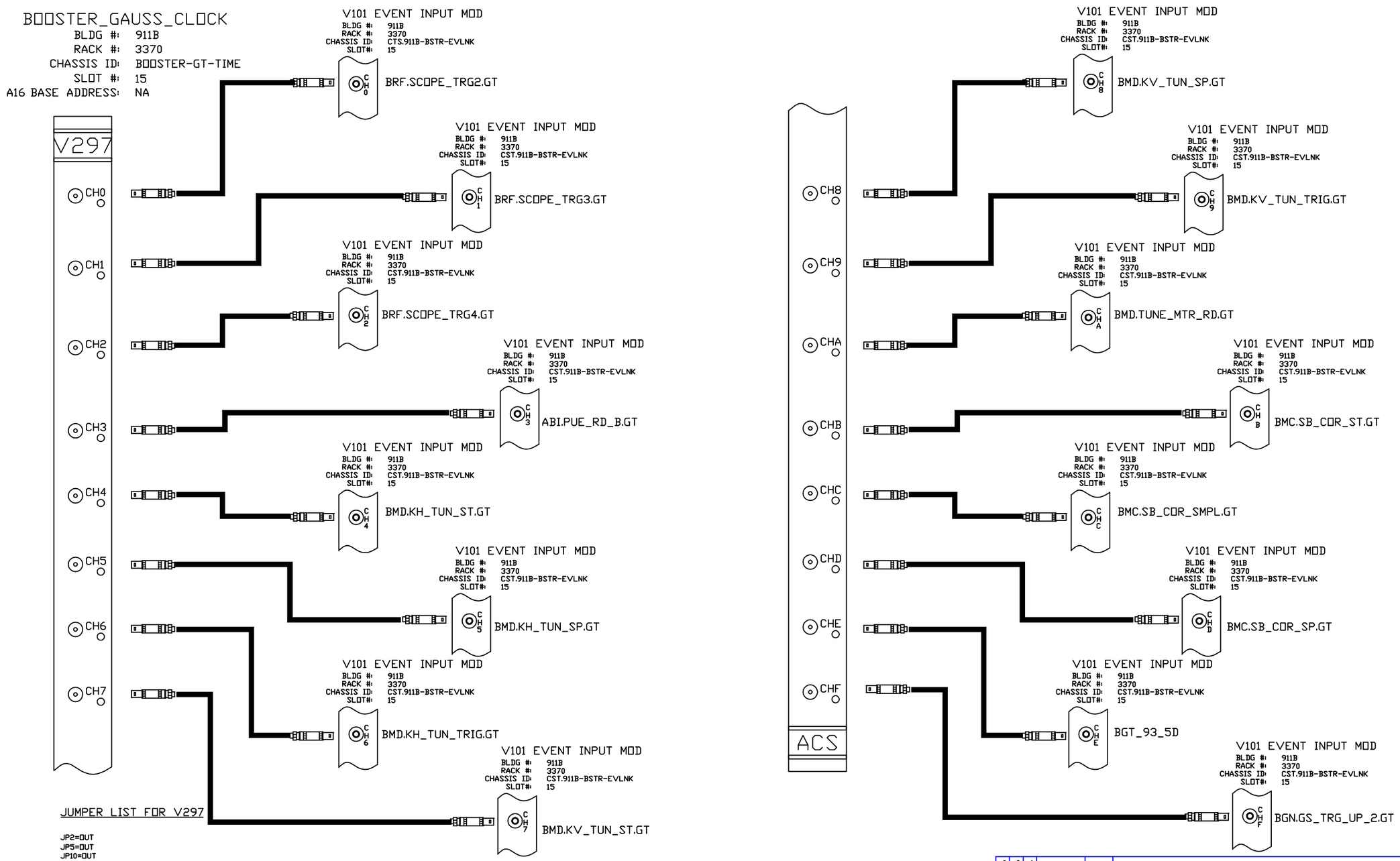

D09-E2726-6

REV.	ZONE	ECN NO.	DATE	BY	CKR	APP.

-3	-2	-1	REF DESIGNATOR	ITEM NO.	DESCRIPTION	MAT'L. DWG NO./JINL NO.
QTY REQD						

INTERPRET IN GENERAL ACCORDANCE WITH ASME Y14.24M-1989

UNLESS OTHERWISE SPECIFIED DIMENSIONS ARE IN INCHES

DECIMAL TOLERANCES
.X ±.030
.XX ±.015
.XXX ±.005
ANGULAR TOLERANCE ± .5°

NA FINISH — BREAK SHARP EDGES — MAX. XX MIN. XX

OUTSTANDING ECN

Q.A. CATEGORY A-3

		DATE
DRAWN BY	Ed Koropsak	11/2/2000
CHECKED BY		
DESIGN APPROVAL		
ENGINEER APPROVAL	Wes Buxton	
SUPVR. APPROVAL		

NEXT ASSEMBLY

BROOKHAVEN NATIONAL LABORATORY
UPTON, N.Y. 11973

C-A CONTROLS WIRING DIAGRAM

BLDG 911B

BOOSTER GAUSS CLOCK (SLOT 15)

SIZE D — DRAWING NUMBER — REV. A

MATERIAL: ——— SCALE: NA WEIGHT: – SHEET 23

Schoenfeld, Controls 1/30/2004 10:59 AM x_23.dwg

*AUTOCAD

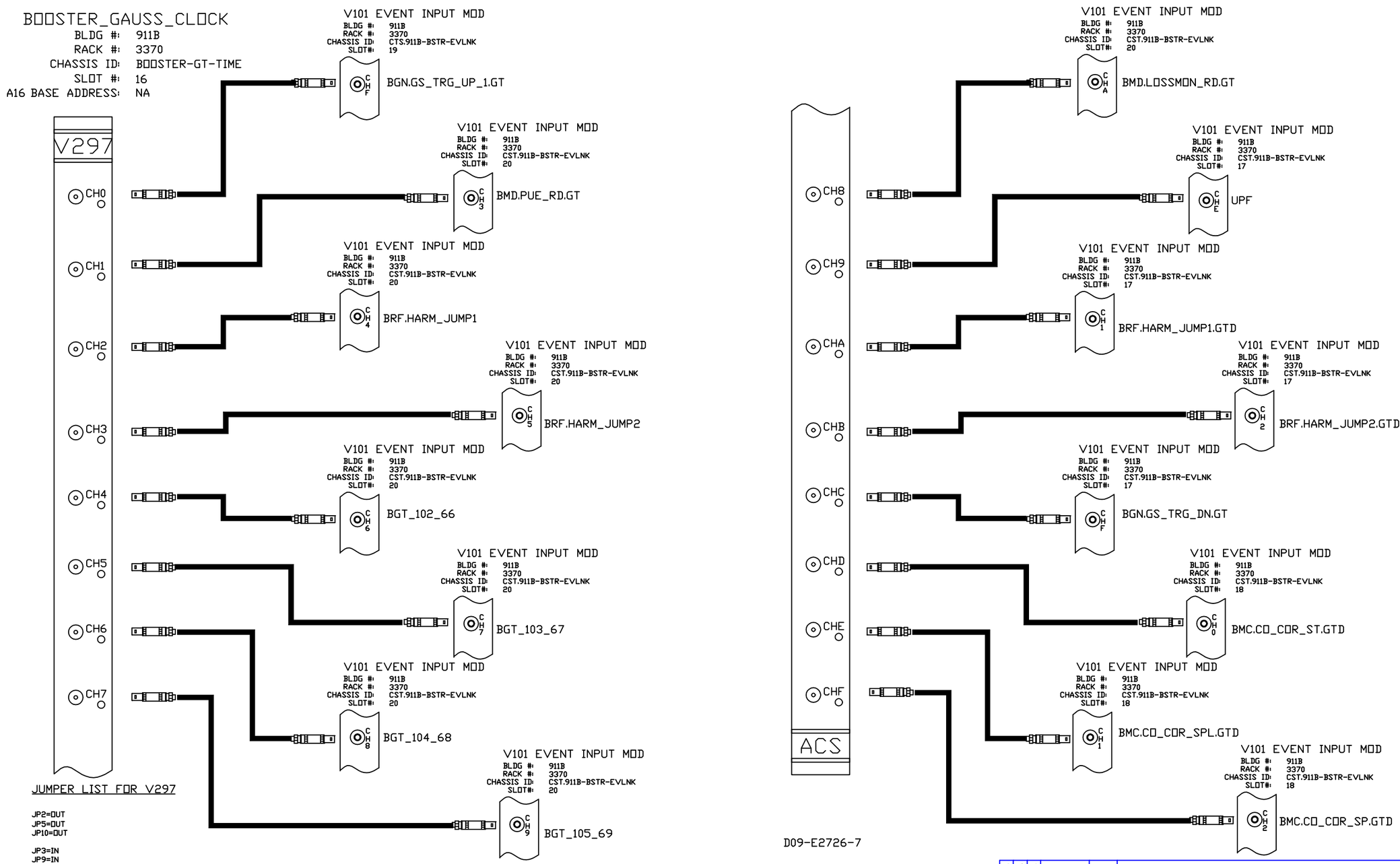

D09-E2726-7

REV.	ZONE	ECN NO.	DATE	BY	CKR	APP.

-3	-2	-1	REF DESIGNATOR	ITEM NO.	DESCRIPTION	MAT'L. DWG NO./INL NO.
QTY REQD						

INTERPRET IN GENERAL ACCORDANCE WITH ASME Y14.24M-1989

UNLESS OTHERWISE SPECIFIED DIMENSIONS ARE IN INCHES

DECIMAL TOLERANCES
.X ±.030
.XX ±.015
.XXX ±.005
ANGULAR TOLERANCE ± .5°

NA FINISH

BREAK SHARP EDGES
MAX. XX MIN. XX

OUTSTANDING ECN

Q.A. CATEGORY	A-3	DATE	
DRAWN BY	Ed Koropsak		11/3/2000
CHECKED BY			
DESIGN APPROVAL			
ENGINEER APPROVAL	Wes Buxton		
SUPVR. APPROVAL			

NEXT ASSEMBLY

BROOKHAVEN NATIONAL LABORATORY
UPTON, N.Y. 11973

C-A CONTROLS WIRING DIAGRAM

BLDG 911B

BOOSTER GAUSS CLOCK (SLOT 16)

SIZE D | DRAWING NUMBER | REV. A

MATERIAL: ——— | SCALE: NA | WEIGHT: – | SHEET 24

Schoenfeld, Controls 1/30/2004 10:58 AM x_24.dwg

*AUTOCAD

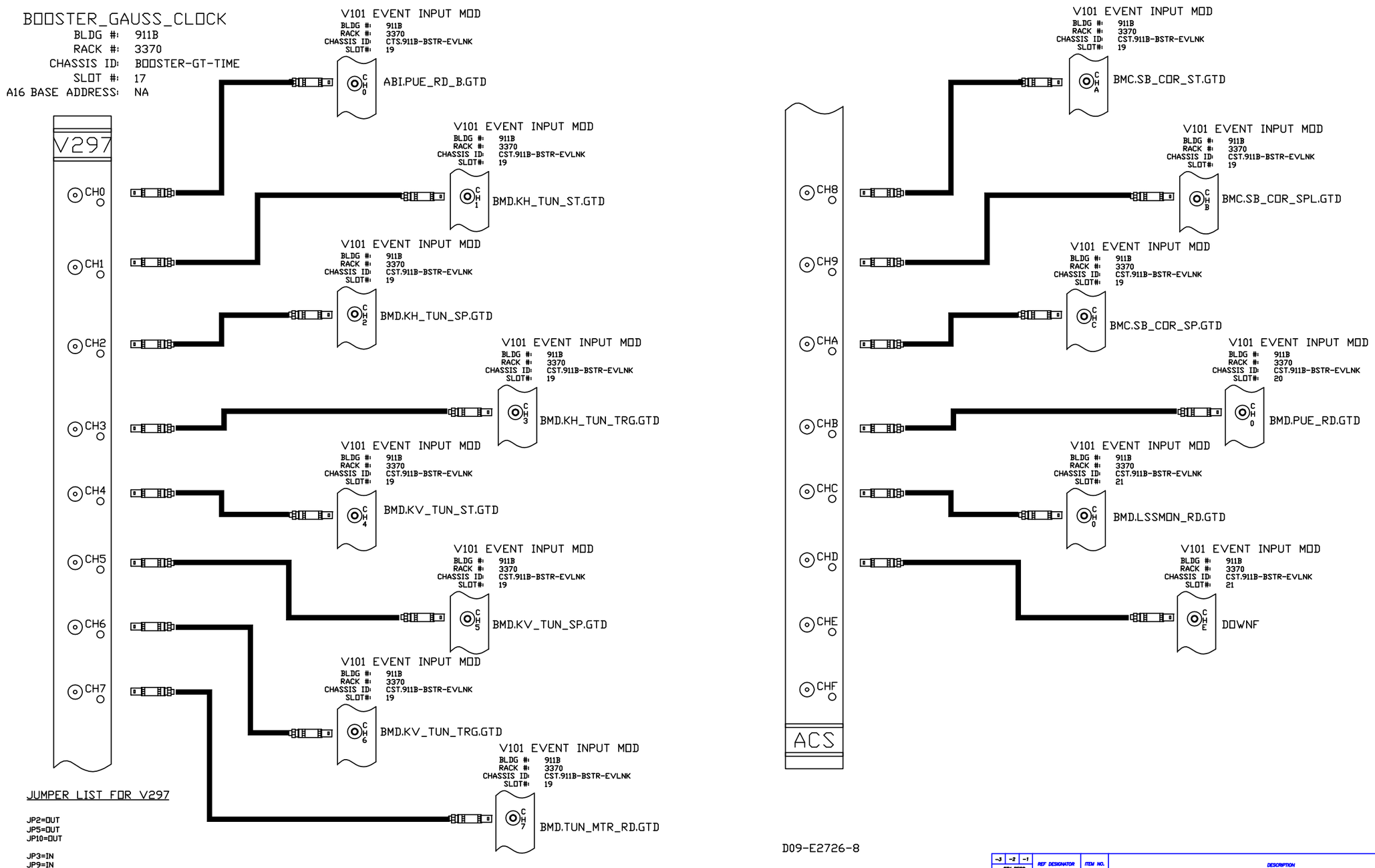

JUMPER LIST FOR V297

JP2=OUT
JP5=OUT
JP10=OUT

JP3=IN
JP9=IN

D09-E2726-8

REV.	ZONE	ECN NO.	DATE	BY	CKR	APP.

-3	-2	-1	REF DESIGNATOR	ITEM NO.	DESCRIPTION	MAT'L. DWG NO./JINL NO.
QTY REQD						

INTERPRET IN GENERAL ACCORDANCE WITH ASME Y14.24M-1989

UNLESS OTHERWISE SPECIFIED DIMENSIONS ARE IN INCHES

DECIMAL TOLERANCES
.X ±.030
.XX ±.015
.XXX ±.005
ANGULAR TOLERANCE ± .5°

NA FINISH

BREAK SHARP EDGES
MAX. XX MIN. XX

OUTSTANDING ECN

Q.A. CATEGORY	A-3	DATE	
DRAWN BY	Ed Koropsak	11/3/2000	
CHECKED BY			
DESIGN APPROVAL			
ENGINEER APPROVAL	Wes Buxton		
SUPVR. APPROVAL			

NEXT ASSEMBLY

BROOKHAVEN NATIONAL LABORATORY
UPTON, N.Y. 11973

C-A CONTROLS WIRING DIAGRAM

BLDG 911B

BOOSTER GAUSS CLOCK (SLOT 17)

SIZE D | DRAWING NUMBER | REV. A

MATERIAL: ——— | SCALE: NA | WEIGHT: – | SHEET 25

Schoenfeld, Controls 1/30/2004 10:57 AM x_25.dwg

*AUTOCAD

BOOSTER_GAUSS_CLOCK

BLDG #: 911B
RACK #: 3370
CHASSIS ID: BOOSTER-GT-TIME
SLOT #: 18
A16 BASE ADDRESS: NA

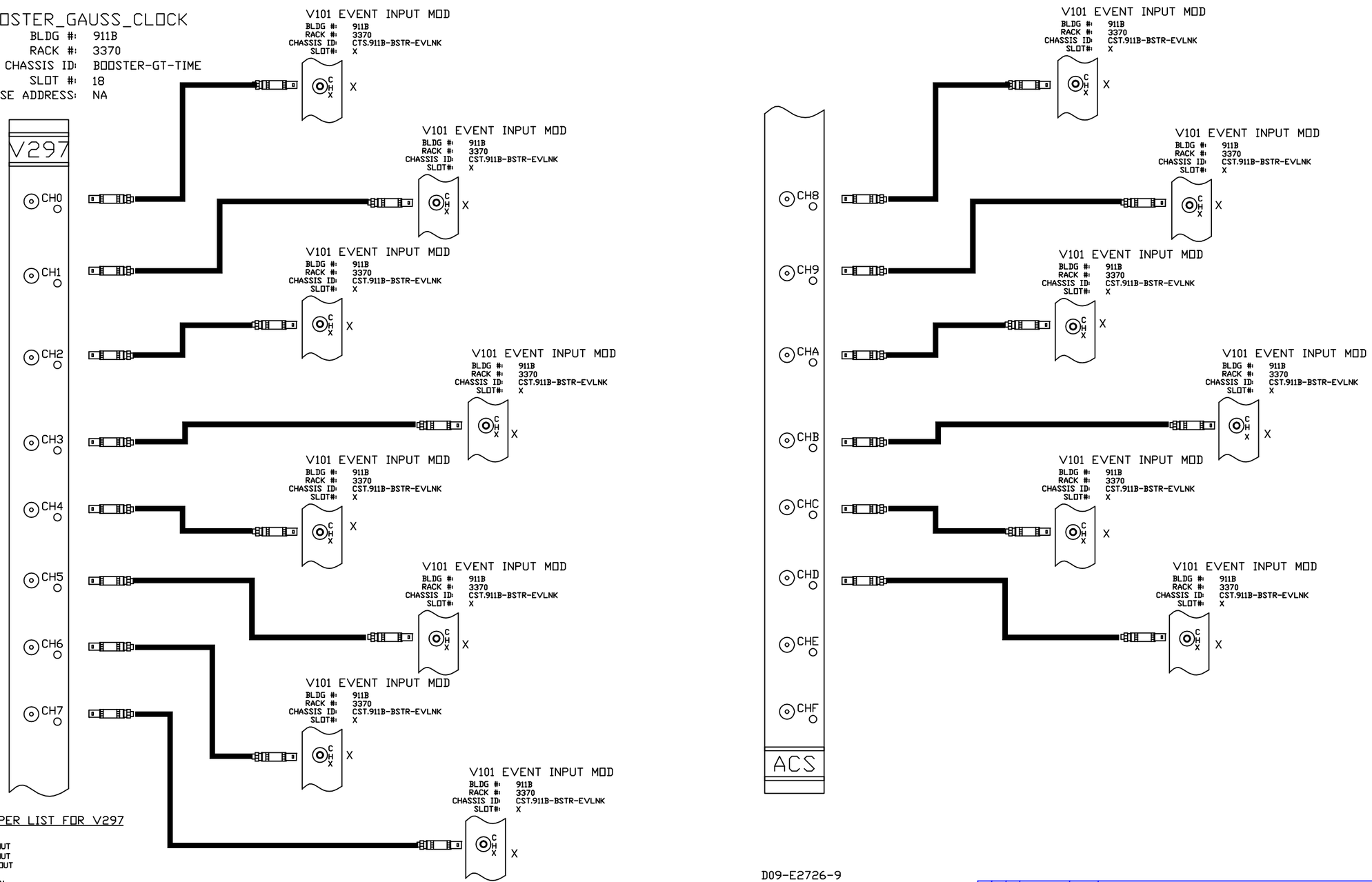

JUMPER LIST FOR V297

JP2=OUT
JP5=OUT
JP10=OUT

JP3=IN
JP9=IN

D09-E2726-9

REV.	ZONE	ECN NO.	DATE	BY	CKR	APP.

QTY REQD -3	-2	-1	REF DESIGNATOR	ITEM NO.	DESCRIPTION	MAT'L. DWG NO./JRNL NO.

INTERPRET IN GENERAL ACCORDANCE WITH ASME Y14.24M-1989

UNLESS OTHERWISE SPECIFIED DIMENSIONS ARE IN INCHES
DECIMAL TOLERANCES
.X ±.030
.XX ±.015
.XXX ±.005
ANGULAR TOLERANCE ± .5°

OUTSTANDING ECN | NA FINISH | BREAK SHARP EDGES | MAX. XX MIN. XX

Q.A. CATEGORY A-3		DATE
DRAWN BY	Ed Koropsak	11/3/2000
CHECKED BY		
DESIGN APPROVAL		
ENGINEER APPROVAL	Wes Buxton	
SUPVR. APPROVAL		

NEXT ASSEMBLY

BROOKHAVEN NATIONAL LABORATORY
UPTON, N.Y. 11973

C-A CONTROLS WIRING DIAGRAM
BLDG 911B
BOOSTER GAUSS CLOCK (SLOT 18)

SIZE D | DRAWING NUMBER | REV. A

MATERIAL: ——— | SCALE: NA | WEIGHT: – | SHEET 26

Schoenfeld, Controls 1/30/2004 10:57 AM x_26.dwg

*AUTOCAD

REV.	ZONE	ECN NO.	DATE	BY	CKR	APP.

V132 GAUSS GENERATOR

BLDG #: 911-B
RACK #: 3370
CHASSIS ID: CFE-911B-BSTR-GC
SLOT #: 13
A24 BASE ADDRESS: 0x720000

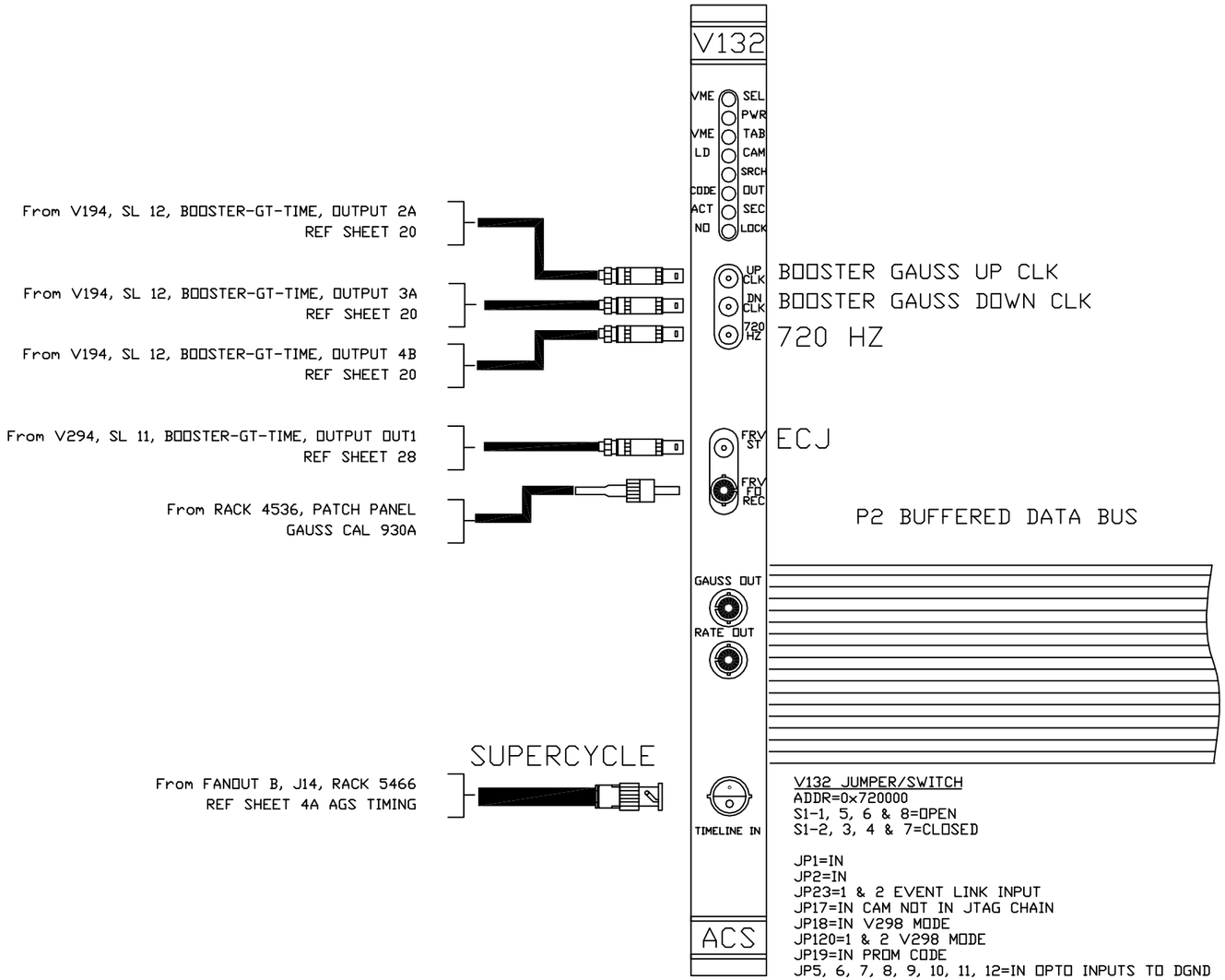

V132 JUMPER/SWITCH
ADDR=0x720000
S1-1, 5, 6 & 8=OPEN
S1-2, 3, 4 & 7=CLOSED

JP1=IN
JP2=IN
JP23=1 & 2 EVENT LINK INPUT
JP17=IN CAM NOT IN JTAG CHAIN
JP18=IN V298 MODE
JP120=1 & 2 V298 MODE
JP19=IN PROM CODE
JP5, 6, 7, 8, 9, 10, 11, 12=IN OPTO INPUTS TO DGND
JP21 & JP22 = ALL IN PULL UP/ PULL DOWN RESISTORS IN

-3	-2	-1	REF DESIGNATOR	ITEM NO.	DESCRIPTION	MAT'L DWG NO./BNL NO.
QTY REQD						

INTERPRET IN GENERAL ACCORDANCE WITH ASME Y14.24M-1989
UNLESS OTHERWISE SPECIFIED DIMENSIONS ARE IN INCHES
DECIMAL TOLERANCES .X ±.030 .XX ±.015 .XXX ±.005
ANGULAR TOLERANCE ± .5°
FINISH NA
BREAK SHARP EDGES MAX. XX MIN. XX
OUTSTANDING ECN

Q.A. CATEGORY A-3
DRAWN BY Ed Koropsak DATE 9/3/04
CHECKED BY
DESIGN APPROVAL
ENGINEER APPROVAL
SUPVR. APPROVAL
NEXT ASSEMBLY

BROOKHAVEN NATIONAL LABORATORY
UPTON, N.Y. 11973
C-A CONTROLS WIRING DIAGRAM
BLDG 911B
V132 GAUSS GENERATOR
SIZE D
DRAWING NUMBER
REV. A
MATERIAL: ——— SCALE: NA WEIGHT: – SHEET 27

Controls, bnl 10/14/2004 9:11 AM x_27.dwg

*AUTOCAD

Controls, bnl 10/14/2004 9:28 AM x_28.dwg

V294
BLDG #: 911B
RACK #: 3370
CHASSIS ID: CFE-911B-BSTR-GC
SLOT #: 11
AXX BASE ADDRESS: N/A

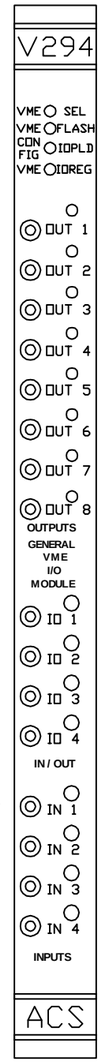

TO V101,SL 7, CH 1
REF SHEET 9

TO V132,SL 13, FRV
REF SHEET 27

FROM V296, SL 12, CH 1, BOOSTER-RT-TIME
REF SHEET 14

BFR

NOTE: BOARD IS SET FOR 1 TO 3 FANOUT.
IN 1=OUT 1, 2 & 3
IN 2=OUT 4, 5 & 6
IN 3=OUT 7, 8 & IO1
IN 4=IO 2, 3 & 4

REV.	ZONE	ECN NO.	DATE	BY	CKR	APP.

-3	-2	-1	REF DESIGNATOR	ITEM NO.	DESCRIPTION	MAT'L DWG NO./BNL NO.
QTY REQD						

INTERPRET IN GENERAL ACCORDANCE WITH ASME Y14.24M-1989
UNLESS OTHERWISE SPECIFIED DIMENSIONS ARE IN INCHES
DECIMAL TOLERANCES .X ±.030 .XX ±.015 .XXX ±.005
ANGULAR TOLERANCE ± .5°
OUTSTANDING ECN
NA FINISH
BREAK SHARP EDGES MAX. XX MIN. XX

Q.A. CATEGORY A-3		DATE
DRAWN BY	Ed Koropsak	11/2/2000
CHECKED BY		
DESIGN APPROVAL		
ENGINEER APPROVAL	Wes Buxton	
SUPVR. APPROVAL		
NEXT ASSEMBLY		

BROOKHAVEN NATIONAL LABORATORY
UPTON, N.Y. 11973
C-A CONTROLS WIRING DIAGRAM
BLDG 911B
V294

SIZE D | DRAWING NUMBER | REV. A
MATERIAL: ——— | SCALE: NA | WEIGHT: – | SHEET 28

*AUTOCAD

REV.	ZONE	ECN NO.	DATE	BY	CKR	APP.

Controls, bnl 10/13/2004 3:31 PM x_29.dwg

FRONT END COMPUTER

BLDG #: 911B
RACK #: 3370
CHASSIS ID: CFE-911B-BSTR-GC
SLOT#: 1
FEC NAME: cfe-911b-bstr-gc

MM-6702 MEMORY MODULE

BLDG #: 911B
RACK #: 3370
CHASSIS ID: CFE-911B-BSTR-GC
SLOT #: 2
A32 BASE ADDRESS: 1000000

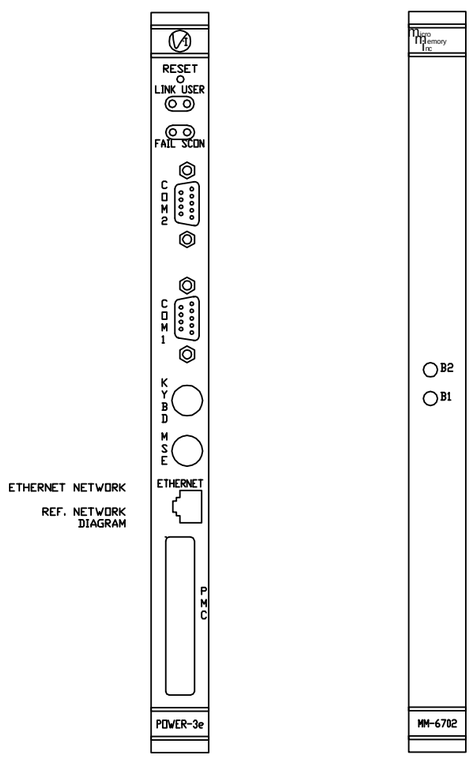

ETHERNET NETWORK

REF. NETWORK DIAGRAM

DEVICE: V108 UTILITY MODULE

BLDG #: 911B
RACK #: 3370
CHASSIS ID: CFE-911B-BSTR-GC
SLOT #: 3
A24 BASE ADDRESS: 0X4000

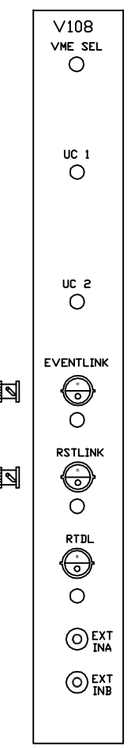

ASSY# 94028094

BOOSTER EVENT LINK
BLDG #: 911B
RACK #: 3370
FANOUT #: B

OUTPUT J17

RESET LINK
BLDG #: 911B
RACK #: 5035
FANOUT #: X

OUTPUT J6

REAL TIME DATA LINK
BLDG #: 911B
RACK #: ?
FANOUT #: ?

OUTPUT J?

ASSY# 94028176
LENGTH AS REQUIRED
(TYP 2 PLACES)

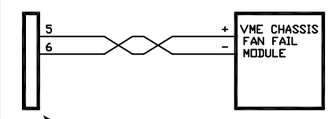

CONNECT TO P2 PINS
ON REAR OF VME CHASSIS
CABLE & CONNECTOR SUPPLIED
WITH VME CHASSIS

JUMPER LIST

1. REMOVE E1.
2. INSTALL E15.
3. SW3 CLOSE ALL POSITIONS. LOWER LIMIT=XX000000
4. SW2 CLOSE POSITIONS 7 AND 8. UPPER LIMIT=XX3FFFFE
5. SW1 CLOSE POSITION 1. BASE=1000000
6. INSTALL E14 AND E25 TO ENABLE BATTERIES
7. SW4 ALL OPEN.
8. SW5 ALL OPEN.
9. SW6 ALL OPEN.

JUMPER LIST

E25 through E50 are configured for remote reset address
at the time of board acceptance test.
DO NOT MODIFY!

Remote reset pulls VME SYS Reset.
E58-E60, E59-E61

A24 BASE ADDRESS= 4000h
E57-E13, E2-E14, E3-E15, E4-E16, E5-E17, E6-E18
E7-E19, E8-E20, E9-E21, E10-E22, E11-E24, E57-E23
SW1=OPEN
SW2=CLOSED
SW3=OPEN
SW4=OPEN

-3	-2	-1	REF DESIGNATOR	ITEM NO.	DESCRIPTION	MAT'L. DWG NO./BNL NO.
QTY REQD						

INTERPRET IN GENERAL ACCORDANCE WITH ASME Y14.24M-1989

UNLESS OTHERWISE SPECIFIED DIMENSIONS ARE IN INCHES

DECIMAL TOLERANCES
.X ±.030
.XX ±.015
.XXX ±.005
ANGULAR TOLERANCE ± .5°

FINISH: NA

BREAK SHARP EDGES MAX. XX MIN. XX

OUTSTANDING ECN

Q.A. CATEGORY A-3

		DATE
DRAWN BY	Venegas	5/16/03
CHECKED BY		
DESIGN APPROVAL		
ENGINEER APPROVAL		
SUPVR. APPROVAL		

NEXT ASSEMBLY

BROOKHAVEN NATIONAL LABORATORY
UPTON, N.Y. 11973

C-AD CONTROLS WIRING DIAGRAM

VME CHASSIS CFE-911B-BSTR-GC

FT END COMP/V108 UTIL MODULE

SIZE: D
DRAWING NUMBER
REV. A

MATERIAL: ——— SCALE: NA WEIGHT: – SHEET 29

*AUTOCAD