BPM ELECTRICAL FOLDER

SHEET	FILENAME	DESCRIPTION
1	BSCALCPU	BPMSCALAR CPU & V108 CABLING
2	BELECCPU	BPM ELE SUPPORT CPU & V108 CABLING
3	BPMEVNT	BPM EVENT LINK CABLING
4	BPMRESET	BPM RESET LINK CABLING
5	BTIMSIG	BPM V102 &V194 CABLING
6	BELEBLK1	BPM F/O PP TO V121 TO V116 CABLING
7	BELEBLK2	BPM F/O PP TO V121 TO V116 CABLING
8	BELEBLK3	BPM F/O PP TO V121 TO V116 CABLING
9	BELEBLK4	BPM F/O PP TO V121 TO V116 CABLING
10	BELEBLK5	BPM F/O PP TO V121 TO V116 CABLING
11	BELEBLK6	BPM F/O PP TO V121 TO V116 CABLING
12	BELEBLK7	BPM F/O PP TO V121 TO V116 CABLING
13	BELEBLK8	BPM F/O PP TO V121 TO V116 CABLING
14	BELEBLK9	BPM F/O PP TO V121 TO V116 CABLING
15	BELEBLK10	BPM F/O PP TO V121 TO V116 CABLING
16	BELEBLK11	BPM F/O PP TO V121 TO V116 CABLING
17	BELEBLK12	BPM F/O PP TO V121 TO V116 CABLING
18	BELEBLK13	BPM F/O PP TO V121 TO V116 CABLING
19	BELEBLK14	BPM F/O PP TO V121 TO V116 CABLING
20	BPMFIB1	BPM F/O PP TO BLDG.929 CABLING
21	BPMFIB2	BPM F/O PP TO BLDG.929 CABLING
22	BPMFIB3	BPM F/O PP TO BLDG.929 CABLING
23	BPMFIB4	BPM F/O PP TO BLDG.929 CABLING
24	BPMFIB5	BPM F/O PP TO BLDG.929 CABLING
25	BPMFIB6	BPM F/O PP TO BLDG.929 CABLING
26	BPMFIB7	BPM F/O PP TO BLDG.929 CABLING
27	BPMBIT3	BPM BIT3 BDS. CABLING
28	BPMOUT	BPM V122 F/O OUTPUT CABLING
29	BPMDIGI	BPM V2170A & V1160A DIGITAL I/O CABLING

BPM MECHANICAL FOLDER

SHEET	FILENAME	DESCRIPTION
1	BFORKOT	BPM F/O MUX&FONS RACK FRONT&REAR
2	BSUPRKOT	BPM SCALAR&SUPPORT RACK FRONT&REAR
3	BFOMXCH	BPM F/O MUX DRIVER CHASSIS FRONT
4	BFOMXCHR	BPM F/O MUX DRIVER CHASSIS REAR
5	BSCACH	BPM SCALAR CHASSIS FRONT
6	BSCACHR	BPM SCALAR CHASSIS REAR
7	BELETCH	BPM ELECTRONIC SUPPORT CHASSIS FRONT
8	BELETCHR	BPM ELECTRONIC SUPPORT CHASSIS REAR

REV.	ZONE	ECN NO.	DATE	BY	CKR	APP.

-3	-2	-1	REF DESIGNATOR	ITEM NO.	DESCRIPTION	MAT'L DWG NO.,SPEC NO.
QTY REQD						

INTERPRET IN GENERAL ACCORDANCE WITH ASME Y14.24M-1989

UNLESS OTHERWISE SPECIFIED DIMENSIONS ARE IN INCHES

DECIMAL TOLERANCES
.X ±.030
.XX ±.015
.XXX ±.005
ANGULAR TOLERANCE ± .5°

OUTSTANDING ECN

NA FINISH

BREAK SHARP EDGES MAX. XX MIN. XX

Q.A. CATEGORY A-3		DATE
DRAWN BY	CZACHOR	02/05/98
CHECKED BY		
DESIGN APPROVAL		
ENGINEER APPROVAL		
SUPVR. APPROVAL		

NEXT ASSEMBLY

BROOKHAVEN NATIONAL LABORATORY
ASSOCIATED UNIVERSITIES, INC.
UPTON, N.Y. 11973

BEAM POSITION MONITOR

FILENAME TO DRAWING & SHT.#

PRINT LIST

SIZE D | DRAWING NUMBER D09-E-XXXX | REV. A

MATERIAL: — N/A | SCALE: N/A | WEIGHT: N/A | SHEET 1 OF 1

*AUTOCAD

FROM	TO	
F/O PPA 1A	V121 S5	IN0
F/O PPA 2A	V121 S5	IN1
F/O PPA 3A	V121 S5	IN2
F/O PPA 4A	V121 S5	IN3
F/O PPA 5A	V121 S5	IN4
F/O PPA 6A	V121 S5	IN5
F/O PPA 1B	V121 S5	IN6
F/O PPA 2B	V121 S5	IN7
F/O PPA 3B	V121 S5	IN8
F/O PPA 4B	V121 S5	IN9
F/O PPA 5B	V121 S5	IN10
F/O PPA 6B	V121 S5	IN11
F/O PPA 1C	V121 S5	IN12
F/O PPA 2C	V121 S5	IN13
F/O PPA 3C	V121 S5	IN14
F/O PPA 4C	V121 S5	IN15
F/O PPA 5C	V121 S6	IN0
F/O PPA 6C	V121 S6	IN1
F/O PPA 1D	SPARE	
F/O PPA 2D	SPARE	
F/O PPA 3D	SPARE	
F/O PPA 4D	SPARE	
F/O PPA 5D	SPARE	
F/O PPA 6D	SPARE	
F/O PPA 1E	V121 S6	IN2
F/O PPA 2E	V121 S6	IN3
F/O PPA 3E	V121 S6	IN4
F/O PPA 4E	V121 S6	IN5
F/O PPA 5E	V121 S6	IN6
F/O PPA 6E	V121 S6	IN7
F/O PPA 1F	V121 S6	IN8
F/O PPA 2F	V121 S6	IN9
F/O PPA 3F	V121 S6	IN10
F/O PPA 4F	V121 S6	IN11
F/O PPA 5F	V121 S6	IN12
F/O PPA 6F	V121 S6	IN13
F/O PPA 1G	V121 S6	IN14
F/O PPA 2G	V121 S6	IN15
F/O PPA 3G	V121 S7	IN0
F/O PPA 4G	V121 S7	IN1
F/O PPA 5G	V121 S7	IN2
F/O PPA 6G	V121 S7	IN3
F/O PPA 1H	SPARE	
F/O PPA 2H	SPARE	
F/O PPA 3H	SPARE	
F/O PPA 4H	SPARE	
F/O PPA 5H	SPARE	
F/O PPA 6H	SPARE	

FROM	TO	
F/O PPB 1A	V121 S7	IN4
F/O PPB 2A	V121 S7	IN5
F/O PPB 3A	V121 S7	IN6
F/O PPB 4A	V121 S7	IN7
F/O PPB 5A	V121 S7	IN8
F/O PPB 6A	V121 S7	IN9
F/O PPB 1B	V121 S7	IN10
F/O PPB 2B	V121 S7	IN11
F/O PPB 3B	V121 S7	IN12
F/O PPB 4B	V121 S7	IN13
F/O PPB 5B	V121 S7	IN14
F/O PPB 6B	V121 S7	IN15
F/O PPB 1C	V121 S8	IN0
F/O PPB 2C	V121 S8	IN1
F/O PPB 3C	V121 S8	IN2
F/O PPB 4C	V121 S8	IN3
F/O PPB 5C	V121 S8	IN4
F/O PPB 6C	V121 S8	IN5
F/O PPB 1D	SPARE	
F/O PPB 2D	SPARE	
F/O PPB 3D	SPARE	
F/O PPB 4D	SPARE	
F/O PPB 5D	SPARE	
F/O PPB 6D	SPARE	
F/O PPB 1E	V121 S8	IN6
F/O PPB 2E	V121 S8	IN7
F/O PPB 3E	V121 S8	IN8
F/O PPB 4E	V121 S8	IN9
F/O PPB 5E	V121 S8	IN10
F/O PPB 6E	V121 S8	IN11
F/O PPB 1F	V121 S8	IN12
F/O PPB 2F	V121 S8	IN13
F/O PPB 3F	V121 S8	IN14
F/O PPB 4F	V121 S8	IN15
F/O PPB 5F	V121 S9	IN0
F/O PPB 6F	V121 S9	IN1
F/O PPB 1G	V121 S9	IN2
F/O PPB 2G	V121 S9	IN3
F/O PPB 3G	V121 S9	IN4
F/O PPB 4G	V121 S9	IN5
F/O PPB 5G	V121 S9	IN6
F/O PPB 6G	V121 S9	IN7
F/O PPB 1H	BPM CONTROL	
F/O PPB 2H	SPARE	
F/O PPB 3H	SPARE	
F/O PPB 4H	SPARE	
F/O PPB 5H	SPARE	
F/O PPB 6H	SPARE	

FROM	TO	
F/O PPC 1A	V121 S9	IN8
F/O PPC 2A	V121 S9	IN9
F/O PPC 3A	V121 S9	IN10
F/O PPC 4A	V121 S9	IN11
F/O PPC 5A	V121 S9	IN12
F/O PPC 6A	V121 S9	IN13
F/O PPC 1B	V121 S9	IN14
F/O PPC 2B	V121 S9	IN15
F/O PPC 3B	V121 S10	IN0
F/O PPC 4B	V121 S10	IN1
F/O PPC 5B	V121 S10	IN2
F/O PPC 6B	V121 S10	IN3
F/O PPC 1C	V121 S10	IN4
F/O PPC 2C	V121 S10	IN5
F/O PPC 3C	V121 S10	IN6
F/O PPC 4C	V121 S10	IN7
F/O PPC 5C	V121 S10	IN8
F/O PPC 6C	V121 S10	IN9
F/O PPC 1D	SPARE	
F/O PPC 2D	SPARE	
F/O PPC 3D	SPARE	
F/O PPC 4D	SPARE	
F/O PPC 5D	SPARE	
F/O PPC 6D	SPARE	
F/O PPC 1E	V121 S10	IN10
F/O PPC 2E	V121 S10	IN11
F/O PPC 3E	V121 S10	IN12
F/O PPC 4E	V121 S10	IN13
F/O PPC 5E	V121 S10	IN14
F/O PPC 6E	V121 S10	IN15
F/O PPC 1F	V121 S11	IN0
F/O PPC 2F	V121 S11	IN1
F/O PPC 3F	V121 S11	IN2
F/O PPC 4F	V121 S11	IN3
F/O PPC 5F	V121 S11	IN4
F/O PPC 6F	V121 S11	IN5
F/O PPC 1G	V121 S11	IN6
F/O PPC 2G	V121 S11	IN7
F/O PPC 3G	V121 S11	IN8
F/O PPC 4G	V121 S11	IN9
F/O PPC 5G	V121 S11	IN10
F/O PPC 6G	V121 S11	IN11
F/O PPC 1H	SPARE	
F/O PPC 2H	SPARE	
F/O PPC 3H	SPARE	
F/O PPC 4H	SPARE	
F/O PPC 5H	SPARE	
F/O PPC 6H	SPARE	

FROM	TO	
F/O PPD 1A	V121 S11	IN12
F/O PPD 2A	V121 S11	IN13
F/O PPD 3A	V121 S11	IN14
F/O PPD 4A	V121 S11	IN15
F/O PPD 5A	V121 S12	IN0
F/O PPD 6A	V121 S12	IN1
F/O PPD 1B	V121 S12	IN2
F/O PPD 2B	V121 S12	IN3
F/O PPD 3B	V121 S12	IN4
F/O PPD 4B	V121 S12	IN5
F/O PPD 5B	V121 S12	IN6
F/O PPD 6B	V121 S12	IN7
F/O PPD 1C	V121 S12	IN8
F/O PPD 2C	V121 S12	IN9
F/O PPD 3C	V121 S12	IN10
F/O PPD 4C	V121 S12	IN11
F/O PPD 5C	V121 S12	IN12
F/O PPD 6C	V121 S12	IN13
F/O PPD 1D	SPARE	
F/O PPD 2D	SPARE	
F/O PPD 3D	SPARE	
F/O PPD 4D	SPARE	
F/O PPD 5D	SPARE	
F/O PPD 6D	SPARE	
F/O PPD 1E	V121 S12	IN14
F/O PPD 2E	V121 S12	IN15
F/O PPD 3E	V121 S13	IN0
F/O PPD 4E	V121 S13	IN1
F/O PPD 5E	V121 S13	IN2
F/O PPD 6E	V121 S13	IN3
F/O PPD 1F	V121 S13	IN4
F/O PPD 2F	V121 S13	IN5
F/O PPD 3F	V121 S13	IN6
F/O PPD 4F	V121 S13	IN7
F/O PPD 5F	V121 S13	IN8
F/O PPD 6F	V121 S13	IN9
F/O PPD 1G	V121 S13	IN10
F/O PPD 2G	V121 S13	IN11
F/O PPD 3G	V121 S13	IN12
F/O PPD 4G	V121 S13	IN13
F/O PPD 5G	V121 S13	IN14
F/O PPD 6G	V121 S13	IN15
F/O PPD 1H	BPM CONTROL	
F/O PPD 2H	SPARE	
F/O PPD 3H	SPARE	
F/O PPD 4H	SPARE	
F/O PPD 5H	SPARE	
F/O PPD 6H	SPARE	

REV.	ZONE	ECN NO.	DATE	BY	CKR	APP.

FROM	TO	
F/O PPE 1A	V121 S14	IN0
F/O PPE 2A	V121 S14	IN1
F/O PPE 3A	V121 S14	IN2
F/O PPE 4A	V121 S14	IN3
F/O PPE 5A	V121 S14	IN4
F/O PPE 6A	V121 S14	IN5
F/O PPE 1B	V121 S14	IN6
F/O PPE 2B	V121 S14	IN7
F/O PPE 3B	V121 S14	IN8
F/O PPE 4B	V121 S14	IN9
F/O PPE 5B	V121 S14	IN10
F/O PPE 6B	V121 S14	IN11
F/O PPE 1C	V121 S14	IN12
F/O PPE 2C	V121 S14	IN13
F/O PPE 3C	V121 S14	IN14
F/O PPE 4C	V121 S14	IN15
F/O PPE 5C	V121 S15	IN0
F/O PPE 6C	V121 S15	IN1
F/O PPE 1D	SPARE	
F/O PPE 2D	SPARE	
F/O PPE 3D	SPARE	
F/O PPE 4D	SPARE	
F/O PPE 5D	SPARE	
F/O PPE 6D	SPARE	
F/O PPE 1E	V121 S15	IN2
F/O PPE 2E	V121 S15	IN3
F/O PPE 3E	V121 S15	IN4
F/O PPE 4E	V121 S15	IN5
F/O PPE 5E	V121 S15	IN6
F/O PPE 6E	V121 S15	IN7
F/O PPE 1F	V121 S15	IN8
F/O PPE 2F	V121 S15	IN9
F/O PPE 3F	V121 S15	IN10
F/O PPE 4F	V121 S15	IN11
F/O PPE 5F	V121 S15	IN12
F/O PPE 6F	V121 S15	IN13
F/O PPE 1G	V121 S15	IN14
F/O PPE 2G	V121 S15	IN15
F/O PPE 3G	V121 S16	IN0
F/O PPE 4G	V121 S16	IN1
F/O PPE 5G	V121 S16	IN2
F/O PPE 6G	V121 S16	IN3
F/O PPE 1H	SPARE	
F/O PPE 2H	SPARE	
F/O PPE 3H	SPARE	
F/O PPE 4H	SPARE	
F/O PPE 5H	SPARE	
F/O PPE 6H	SPARE	

-3	-2	-1	REF DESIGNATOR	ITEM NO.	DESCRIPTION	MAT'L DWG NO./BNL NO.
QTY REQD						

INTERPRET IN GENERAL ACCORDANCE WITH ASME Y14.24M-1989

UNLESS OTHERWISE SPECIFIED DIMENSIONS ARE IN INCHES

DECIMAL TOLERANCES
.X ±.030
.XX ±.015
.XXX ±.005
ANGULAR TOLERANCE
± .5°

FINISH: NA

BREAK SHARP EDGES
MAX. XX MIN. XX

OUTSTANDING ECN

Q.A. CATEGORY A-3

		DATE
DRAWN BY	CZACHOR	02/05/98
CHECKED BY		
DESIGN APPROVAL		
ENGINEER APPROVAL		
SUPVR. APPROVAL		

NEXT ASSEMBLY

BROOKHAVEN NATIONAL LABORATORY
ASSOCIATED UNIVERSITIES, INC.
UPTON, N.Y. 11973

BEAM POSITION MONITOR
F0-PP to V121
RUN LIST

SIZE D | D09-E-XXXX | REV. A
DRAWING NUMBER

MATERIAL: — N/A | SCALE: N/A | WEIGHT: N/A | SHEET 1 OF 2

*AUTOCAD

FROM	TO	
F/O PPF 1A	V121 S16	IN4
F/O PPF 2A	V121 S16	IN5
F/O PPF 3A	V121 S16	IN6
F/O PPF 4A	V121 S16	IN7
F/O PPF 5A	V121 S16	IN8
F/O PPF 6A	V121 S16	IN9
F/O PPF 1B	V121 S16	IN10
F/O PPF 2B	V121 S16	IN11
F/O PPF 3B	V121 S16	IN12
F/O PPF 4B	V121 S16	IN13
F/O PPF 5B	V121 S16	IN14
F/O PPF 6B	V121 S16	IN15
F/O PPF 1C	V121 S17	IN0
F/O PPF 2C	V121 S17	IN1
F/O PPF 3C	V121 S17	IN2
F/O PPF 4C	V121 S17	IN3
F/O PPF 5C	V121 S17	IN4
F/O PPF 6C	V121 S17	IN5
F/O PPF 1D	SPARE	
F/O PPF 2D	SPARE	
F/O PPF 3D	SPARE	
F/O PPF 4D	SPARE	
F/O PPF 5D	SPARE	
F/O PPF 6D	SPARE	
F/O PPF 1E	V121 S17	IN6
F/O PPF 2E	V121 S17	IN7
F/O PPF 3E	V121 S17	IN8
F/O PPF 4E	V121 S17	IN9
F/O PPF 5E	V121 S17	IN10
F/O PPF 6E	V121 S17	IN11
F/O PPF 1F	V121 S17	IN12
F/O PPF 2F	V121 S17	IN13
F/O PPF 3F	V121 S17	IN14
F/O PPF 4F	V121 S17	IN15
F/O PPF 5F	V121 S18	IN0
F/O PPF 6F	V121 S18	IN1
F/O PPF 1G	V121 S18	IN2
F/O PPF 2G	V121 S18	IN3
F/O PPF 3G	V121 S18	IN4
F/O PPF 4G	V121 S18	IN5
F/O PPF 5G	V121 S18	IN6
F/O PPF 6G	V121 S18	IN7
F/O PPF 1H	BPM CONTROL	
F/O PPF 2H	SPARE	
F/O PPF 3H	SPARE	
F/O PPF 4H	SPARE	
F/O PPF 5H	SPARE	
F/O PPF 6H	SPARE	

FROM	TO	
F/O PPG 1A	V122 S21	OUT0
F/O PPG 2A	V122 S21	OUT1
F/O PPG 3A	V122 S21	OUT2
F/O PPG 4A	V122 S21	OUT3
F/O PPG 5A	V122 S21	OUT4
F/O PPG 6A	V122 S21	OUT5
F/O PPG 1B	V122 S21	OUT6
F/O PPG 2B	V122 S21	OUT7
F/O PPG 3B	SPARE	
F/O PPG 4B	SPARE	
F/O PPG 5B	SPARE	
F/O PPG 6B	SPARE	
F/O PPG 1C	SPARE	
F/O PPG 2C	SPARE	
F/O PPG 3C	SPARE	
F/O PPG 4C	SPARE	
F/O PPG 5C	SPARE	
F/O PPG 6C	SPARE	
F/O PPG 1D	SPARE	
F/O PPG 2D	SPARE	
F/O PPG 3D	SPARE	
F/O PPG 4D	SPARE	
F/O PPG 5D	SPARE	
F/O PPG 6D	SPARE	
F/O PPG 1E	SPARE	
F/O PPG 2E	SPARE	
F/O PPG 3E	SPARE	
F/O PPG 4E	SPARE	
F/O PPG 5E	SPARE	
F/O PPG 6E	SPARE	
F/O PPG 1F	SPARE	
F/O PPG 2F	SPARE	
F/O PPG 3F	SPARE	
F/O PPG 4F	SPARE	
F/O PPG 5F	SPARE	
F/O PPG 6F	SPARE	
F/O PPG 1G	SPARE	
F/O PPG 2G	SPARE	
F/O PPG 3G	SPARE	
F/O PPG 4G	SPARE	
F/O PPG 5G	SPARE	
F/O PPG 6G	SPARE	
F/O PPG 1H	SPARE	
F/O PPG 2H	SPARE	
F/O PPG 3H	SPARE	
F/O PPG 4H	SPARE	
F/O PPG 5H	SPARE	
F/O PPG 6H	SPARE	

REV.	ZONE	ECN NO.	DATE	BY	CKR	APP.

-3	-2	-1	REF DESIGNATOR	ITEM NO.	DESCRIPTION	MAT'L DWG NO./BNL NO.
QTY REQD						

INTERPRET IN GENERAL ACCORDANCE WITH ASME Y14.24M-1989

UNLESS OTHERWISE SPECIFIED DIMENSIONS ARE IN INCHES

DECIMAL TOLERANCES
.X ±.030
.XX ±.015
.XXX ±.005
ANGULAR TOLERANCE
± .5°

NA FINISH

BREAK SHARP EDGES
MAX. XX MIN. XX

OUTSTANDING ECN

Q.A. CATEGORY A-3

		DATE
DRAWN BY	CZACHOR	02/05/98
CHECKED BY		
DESIGN APPROVAL		
ENGINEER APPROVAL		
SUPVR. APPROVAL		

NEXT ASSEMBLY

BROOKHAVEN NATIONAL LABORATORY
ASSOCIATED UNIVERSITIES, INC.
UPTON, N.Y. 11973

BEAM POSITION MONITOR

FO-PP to V121

RUN LIST

SIZE D | DRAWING NUMBER D09-E-XXXX | REV. A

MATERIAL: — N/A | SCALE: N/A | WEIGHT: N/A | SHEET 2 OF 2

*AUTOCAD

FROM T121 Upper 37	TO 64 Pin Ribbon
1	N.C.
20	N.C.
2	N.C.
21	N.C.
3	N.C.
22	C1
4	A1
23	C2
5	A2
24	C3
6	A3
25	C4
7	A4
26	C5
8	A5
27	C6
9	A6
28	C7
10	A7
29	C8
11	A8
30	C9
12	A9
31	C10
13	A10
32	C11
14	A11
33	C12
15	A12
34	C13
16	A13
35	C14
17	A14
36	C15
18	A15
37	C16
19	A16

FROM T121 Upper 37	TO 64 Pin Ribbon
1	C17
20	A17
2	C18
21	A18
3	C19
22	A19
4	C20
23	A20
5	C21
24	A21
6	C22
25	A22
7	C23
26	A23
8	C24
27	A24
9	C25
28	A25
10	C26
29	A26
11	C27
30	A27
12	C28
31	A28
13	C29
32	A29
14	C30
33	A30
15	C31
34	A31
16	C32
35	A32
17	N.C.
36	N.C.
18	N.C.
37	N.C.
19	N.C.

T12T NOT TO SCALE

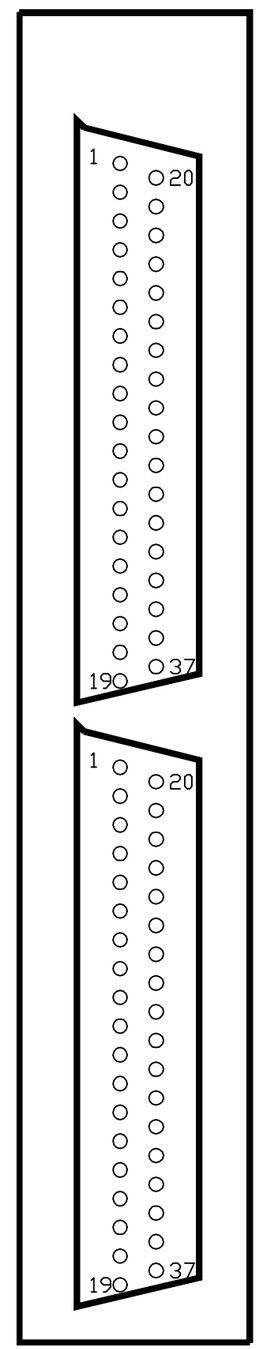

REV.	ZONE	ECN NO.	DATE	BY	CKR	APP.

-3	-2	-1	REF DESIGNATOR	ITEM NO.	DESCRIPTION	MAT'L DWG NO./BNL NO.
QTY REQD						

INTERPRET IN GENERAL ACCORDANCE WITH ASME Y14.24M-1989

UNLESS OTHERWISE SPECIFIED DIMENSIONS ARE IN INCHES

DECIMAL TOLERANCES
.X ±.030
.XX ±.015
.XXX ±.005
ANGULAR TOLERANCE
± .5°

NA FINISH

BREAK SHARP EDGES
MAX. XX MIN. XX

OUTSTANDING ECN

Q.A. CATEGORY A-3		DATE
DRAWN BY	CZACHOR	08/21/98
CHECKED BY		
DESIGN APPROVAL		
ENGINEER APPROVAL		
SUPVR. APPROVAL		

NEXT ASSEMBLY

BROOKHAVEN NATIONAL LABORATORY
ASSOCIATED UNIVERSITIES, INC.
UPTON, N.Y. 11973

BEAM POSITION MONITOR

T121 Mux Driver to Scalar

Cabling

SIZE D

DRAWING NUMBER D09-E-XXXX

REV. A

MATERIAL: — N/A | SCALE: N/A | WEIGHT: N/A | SHEET 1 OF 1

*AUTOCAD

REV.	ZONE	ECN NO.	DATE	BY	CKR	APP.

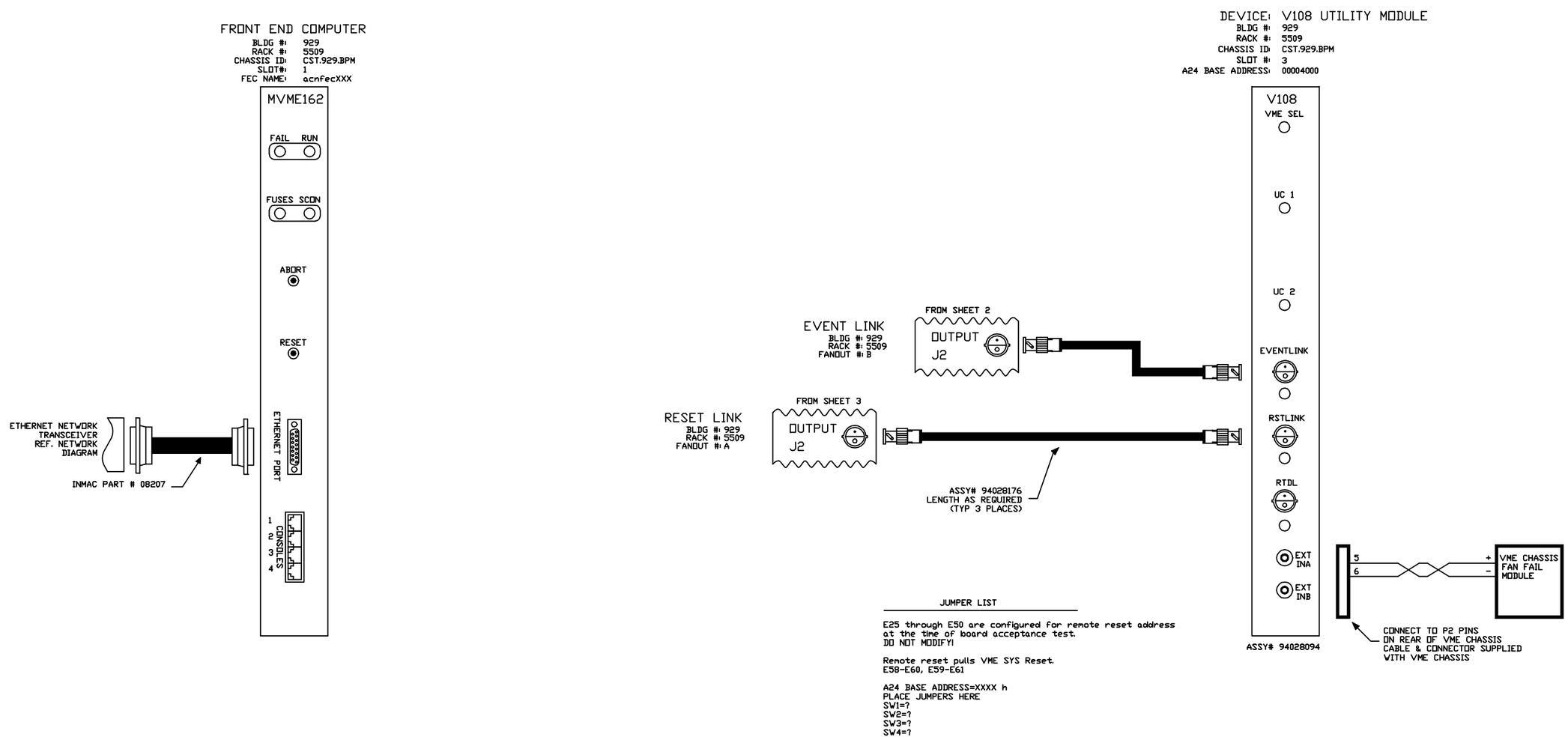

JUMPER LIST

E25 through E50 are configured for remote reset address at the time of board acceptance test.
DO NOT MODIFY!

Remote reset pulls VME SYS Reset.
E58-E60, E59-E61

A24 BASE ADDRESS=XXXX h
PLACE JUMPERS HERE
SW1=?
SW2=?
SW3=?
SW4=?

-3	-2	-1	REF DESIGNATOR	ITEM NO.	DESCRIPTION	MAT'L DWG NO./DWG NO.
QTY REQD						

INTERPRET IN GENERAL ACCORDANCE WITH ASME Y14.24M-1989

UNLESS OTHERWISE SPECIFIED DIMENSIONS ARE IN INCHES

DECIMAL TOLERANCES
.X ±.030
.XX ±.015
.XXX ±.005
ANGULAR TOLERANCE
± .5°

NA FINISH

BREAK SHARP EDGES
MAX. XX MIN. XX

OUTSTANDING ECN

Q.A. CATEGORY A-3		DATE
DRAWN BY	CZACHOR	06/06/97
CHECKED BY		
DESIGN APPROVAL		
ENGINEER APPROVAL		
SUPVR. APPROVAL		

NEXT ASSEMBLY

BROOKHAVEN NATIONAL LABORATORY
ASSOCIATED UNIVERSITIES, INC.
UPTON, N.Y. 11973

BEAM POSITION MONITOR
SCALER CHASSIS
FT END COMP/V108 UTIL MODULE

SIZE D | D09-E-XXXX | REV. A
DRAWING NUMBER

MATERIAL: ——— | SCALE: NA | WEIGHT: – | SHEET 1 OF X

*AUTOCAD

REV.	ZONE	ECN NO.	DATE	BY	CKR	APP.

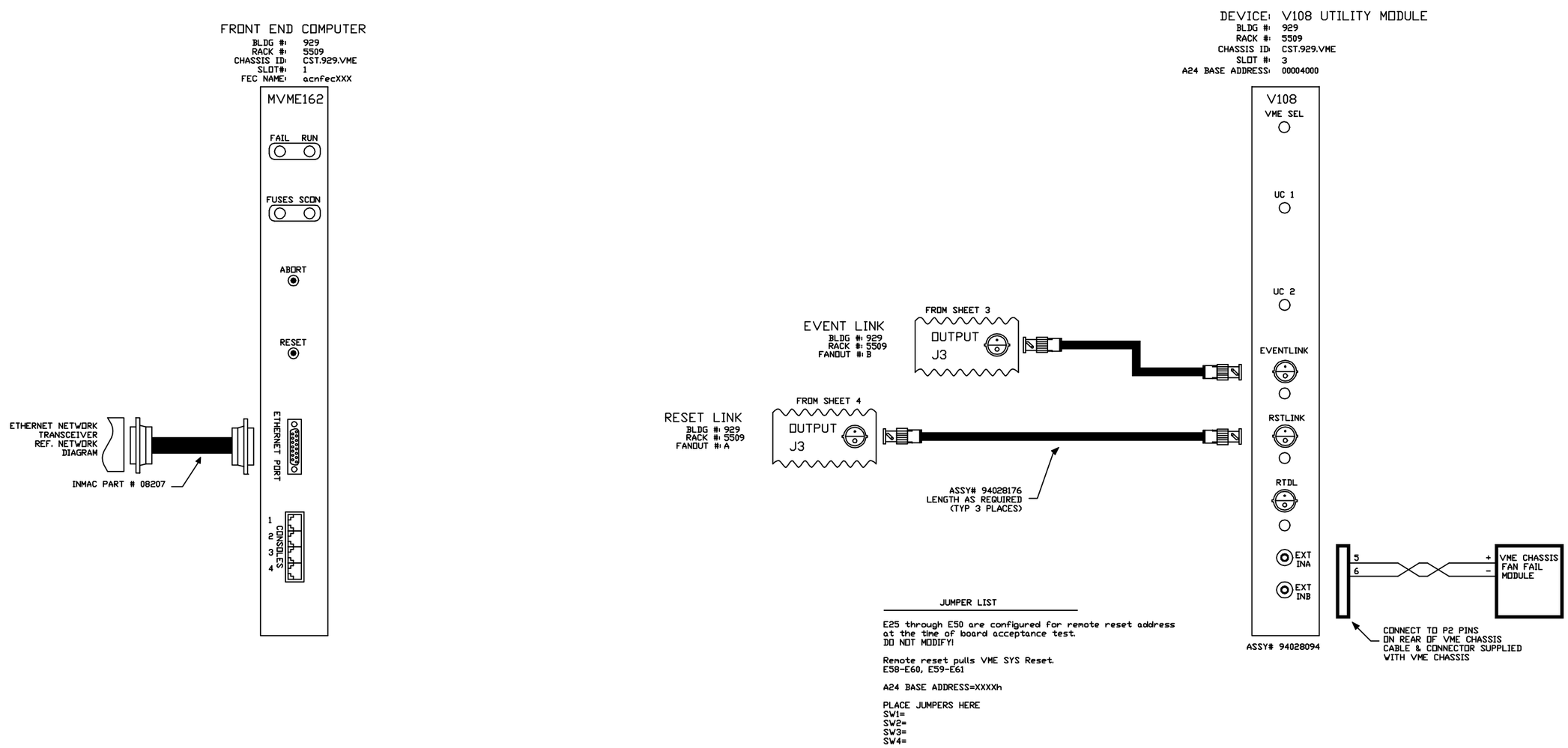

JUMPER LIST

E25 through E50 are configured for remote reset address at the time of board acceptance test.
DO NOT MODIFY!

Remote reset pulls VME SYS Reset.
E58-E60, E59-E61

A24 BASE ADDRESS=XXXXh

PLACE JUMPERS HERE
SW1=
SW2=
SW3=
SW4=

-3	-2	-1	REF DESIGNATOR	ITEM NO.	DESCRIPTION	MAT'L DWG NO./DWG NO.
QTY REQD						

INTERPRET IN GENERAL ACCORDANCE WITH ASME Y14.24M-1989

UNLESS OTHERWISE SPECIFIED DIMENSIONS ARE IN INCHES

DECIMAL TOLERANCES
.X ±.030
.XX ±.015
.XXX ±.005
ANGULAR TOLERANCE
± .5°

OUTSTANDING ECN

NA FINISH

BREAK SHARP EDGES
MAX. XX MIN. XX

Q.A. CATEGORY A-3		DATE
DRAWN BY	CZACHOR	06/06/97
CHECKED BY		
DESIGN APPROVAL		
ENGINEER APPROVAL		
SUPVR. APPROVAL		

NEXT ASSEMBLY

BROOKHAVEN NATIONAL LABORATORY
ASSOCIATED UNIVERSITIES, INC.
UPTON, N.Y. 11973

BEAM POSITION MONITOR
ELECTRONIC SUPPORT CHASSIS
FT END COMP/V108 UTIL MODULE

SIZE D | D09-E-XXXX | REV. A
DRAWING NUMBER

MATERIAL: ——— | SCALE: NA | WEIGHT: – | SHEET 2 OF X

*AUTOCAD

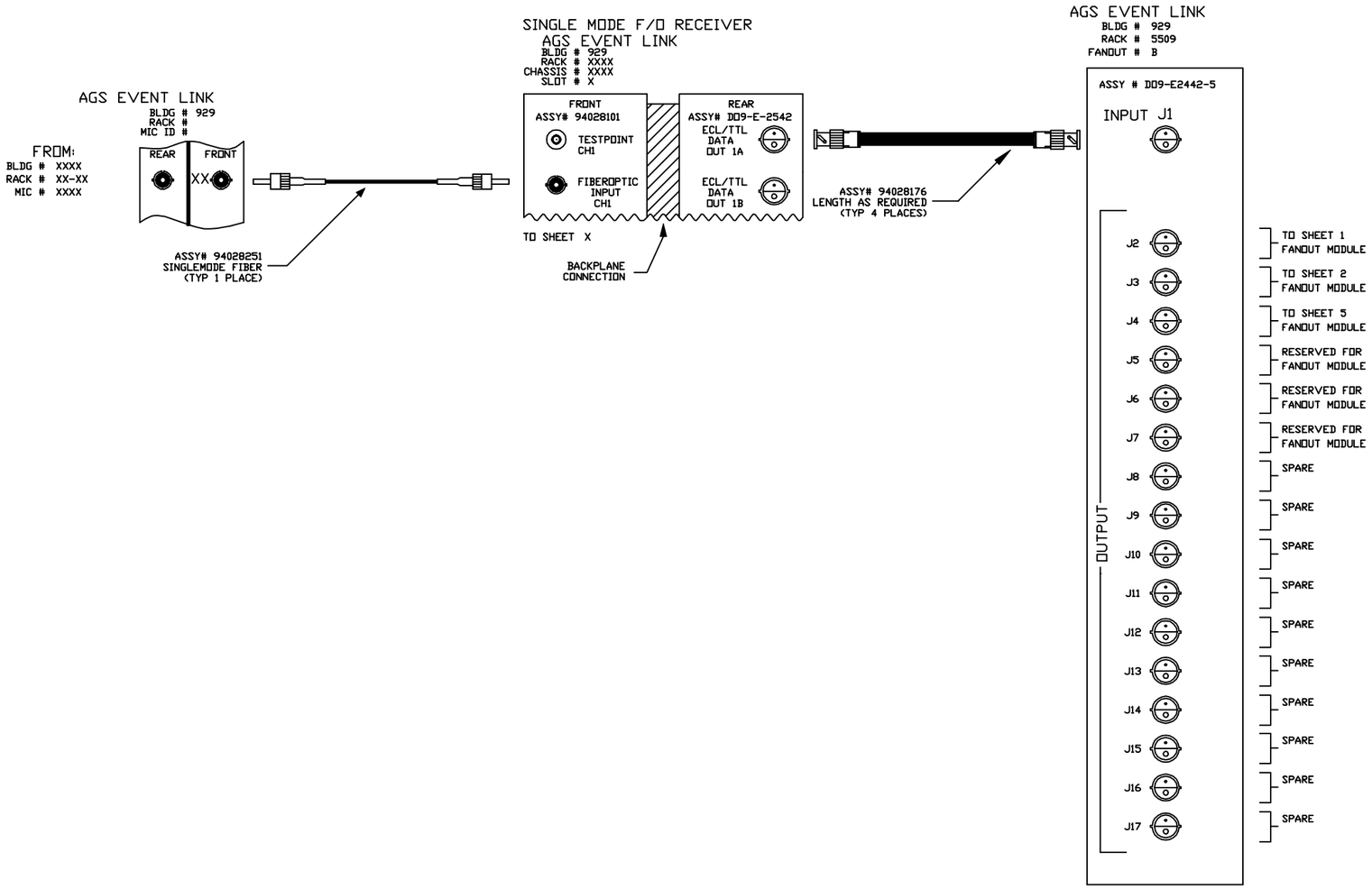

REV.	ZONE	ECN NO.	DATE	BY	CKR	APP.

-3	-2	-1	REF DESIGNATOR	ITEM NO.	DESCRIPTION	MAT'L DWG NO./DWG NO.
QTY REQD						

INTERPRET IN GENERAL ACCORDANCE WITH ASME Y14.24M-1989

UNLESS OTHERWISE SPECIFIED DIMENSIONS ARE IN INCHES

DECIMAL TOLERANCES
.X ±.030
.XX ±.015
.XXX ±.005
ANGULAR TOLERANCE
± .5°

NA FINISH

BREAK SHARP EDGES
MAX. XX MIN. XX

OUTSTANDING ECN

Q.A. CATEGORY A-3		DATE
DRAWN BY	CZACHOR	6/6/97
CHECKED BY		
DESIGN APPROVAL		
ENGINEER APPROVAL		
SUPVR. APPROVAL		

NEXT ASSEMBLY

BROOKHAVEN NATIONAL LABORATORY
ASSOCIATED UNIVERSITIES, INC.
UPTON, N.Y. 11973

BEAM POSITION MONITOR

BLDG. 929

EVENT LINK

SIZE D | DRAWING NUMBER D09-E-XXXX | REV. A

MATERIAL: ——— | SCALE: NA | WEIGHT: – | SHEET 3 of X

*AUTOCAD

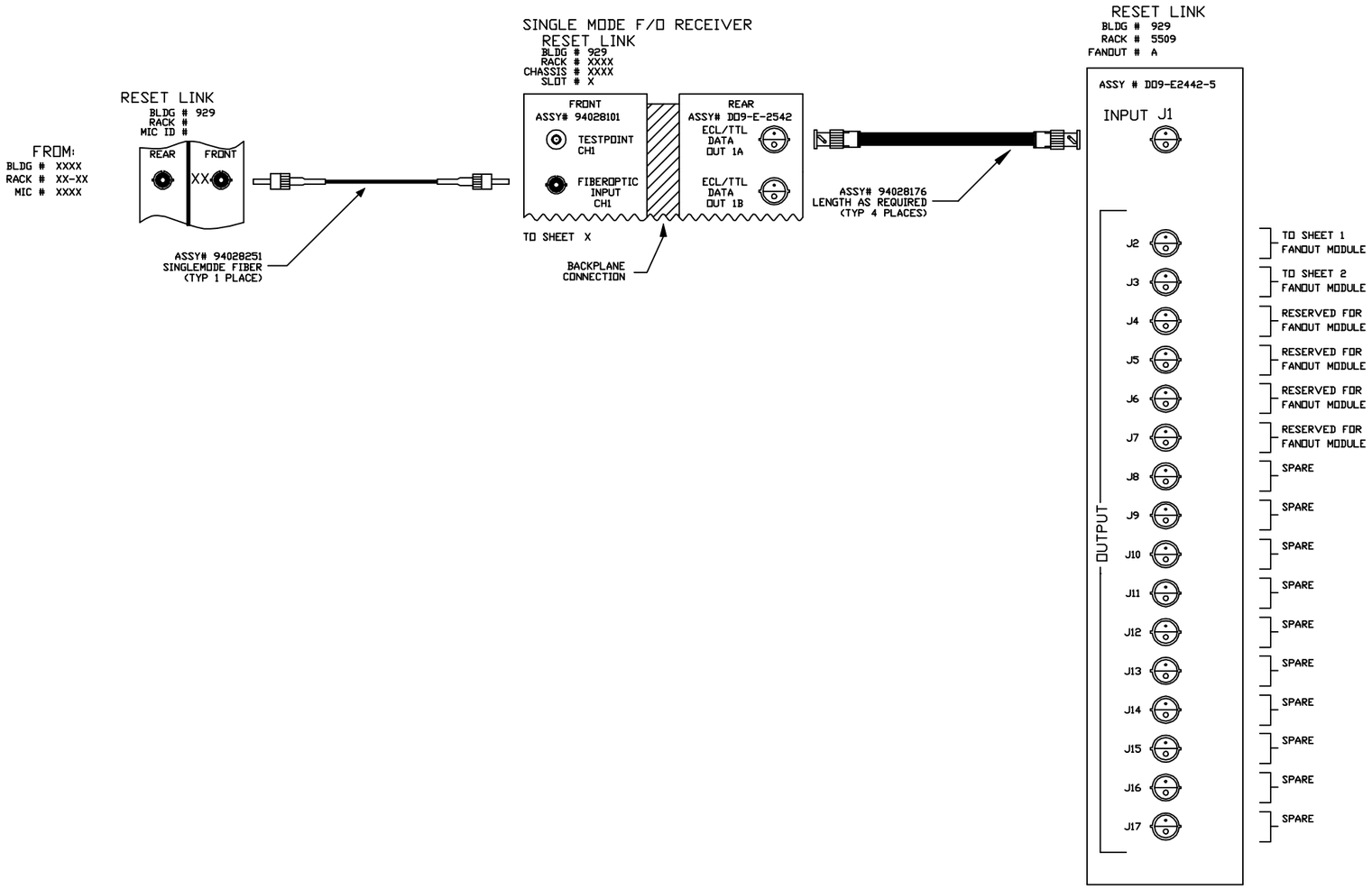

REV.	ZONE	ECN NO.	DATE	BY	CKR	APP.

-3	-2	-1	REF DESIGNATOR	ITEM NO.	DESCRIPTION	MAT'L DWG NO./DWG NO.
QTY REQD						

INTERPRET IN GENERAL ACCORDANCE WITH ASME Y14.24M-1989

UNLESS OTHERWISE SPECIFIED DIMENSIONS ARE IN INCHES

DECIMAL TOLERANCES
.X ±.030
.XX ±.015
.XXX ±.005
ANGULAR TOLERANCE
± .5°

FINISH: NA

BREAK SHARP EDGES
MAX. XX MIN. XX

OUTSTANDING ECN

Q.A. CATEGORY A-3		DATE
DRAWN BY	CZACHOR	6/6/97
CHECKED BY		
DESIGN APPROVAL		
ENGINEER APPROVAL		
SUPVR. APPROVAL		

NEXT ASSEMBLY

BROOKHAVEN NATIONAL LABORATORY
ASSOCIATED UNIVERSITIES, INC.
UPTON, N.Y. 11973

BEAM POSITION MONITOR

BLDG. 929

RESET LINK

SIZE: D

DD9-E-XXXX

DRAWING NUMBER

REV. A

MATERIAL: ———— SCALE: NA WEIGHT: – SHEET 4 of X

*AUTOCAD

REV.	ZONE	ECN NO.	DATE	BY	CKR	APP.

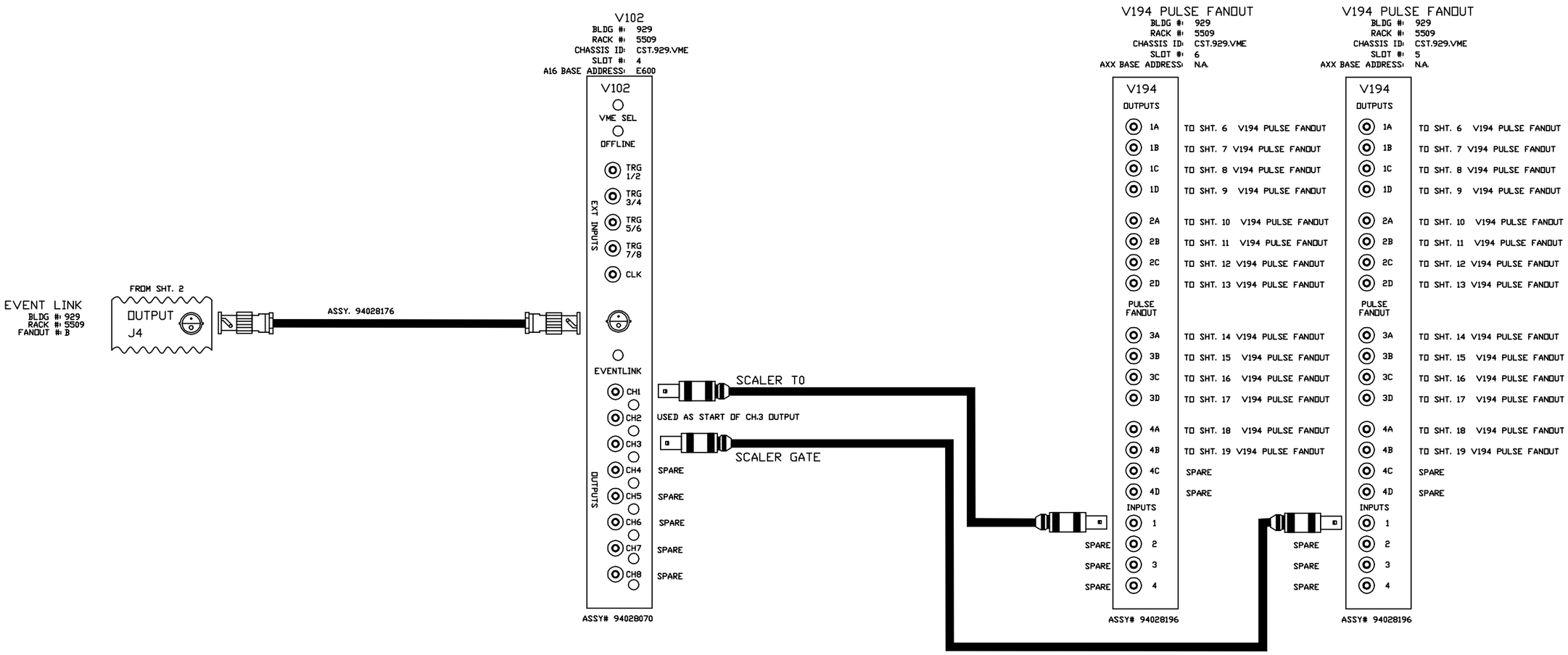

2	X	1	LEMO CABLE	A29991
-3 / -2 / -1 QTY REQD	REF DESIGNATOR	ITEM NO.	DESCRIPTION	MATL DWG NO./BNL NO.

INTERPRET IN GENERAL ACCORDANCE WITH ASME Y14.24M-1989

UNLESS OTHERWISE SPECIFIED DIMENSIONS ARE IN INCHES

DECIMAL TOLERANCES
.X ±.030
.XX ±.015
.XXX ±.005
ANGULAR TOLERANCE
± .5°

NA FINISH

BREAK SHARP EDGES
MAX. XX MIN. XX

OUTSTANDING ECN

Q.A. CATEGORY A-3

		DATE
DRAWN BY	CZACHOR	02/02/98
CHECKED BY		
DESIGN APPROVAL		
ENGINEER APPROVAL		
SUPVR. APPROVAL		

NEXT ASSEMBLY

BROOKHAVEN NATIONAL LABORATORY
ASSOCIATED UNIVERSITIES, INC.
UPTON, N.Y. 11973

BEAM POSITION MONITOR
V102/V194
CABLING

SIZE D
DRAWING NUMBER D09-E-XXXX
REV. A

MATERIAL: — N/A | SCALE: N/A | WEIGHT: N/A | SHEET 5 OF X

*AUTOCAD

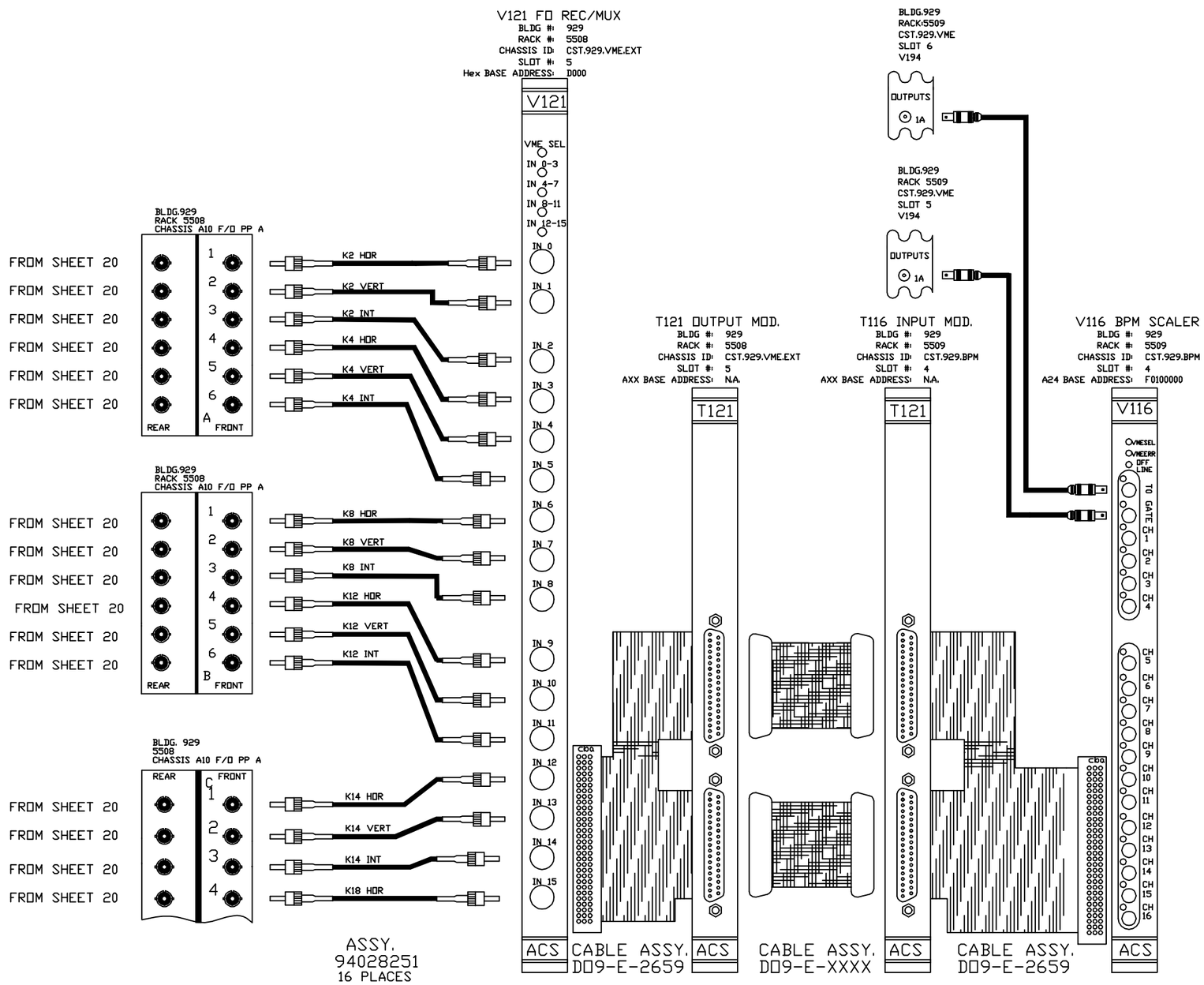

QTY REQD -3	QTY REQD -2	QTY REQD -1	REF DESIGNATOR	ITEM NO.	DESCRIPTION	MAT'L DWG NO./BNL NO.
	2	X		1	LEMO CABLES	A29997

INTERPRET IN GENERAL ACCORDANCE WITH ASME Y14.24M-1989

UNLESS OTHERWISE SPECIFIED DIMENSIONS ARE IN INCHES

DECIMAL TOLERANCES
.X ±.030
.XX ±.015
.XXX ±.005
ANGULAR TOLERANCE
± .5°

NA FINISH

BREAK SHARP EDGES
MAX. XX MIN. XX

OUTSTANDING ECN

Q.A. CATEGORY A-3		DATE
DRAWN BY	CZACHOR	02/02/98
CHECKED BY		
DESIGN APPROVAL		
ENGINEER APPROVAL		
SUPVR. APPROVAL		

NEXT ASSEMBLY

BROOKHAVEN NATIONAL LABORATORY
ASSOCIATED UNIVERSITIES, INC.
UPTON, N.Y. 11973

BEAM POSITION MONITOR
FO-PP; V121; V116
CABLING

SIZE D
DRAWING NUMBER D09-E-XXXX
REV. A

MATERIAL: — N/A | SCALE: N/A | WEIGHT: N/A | SHEET 6 OF X

*AUTOCAD

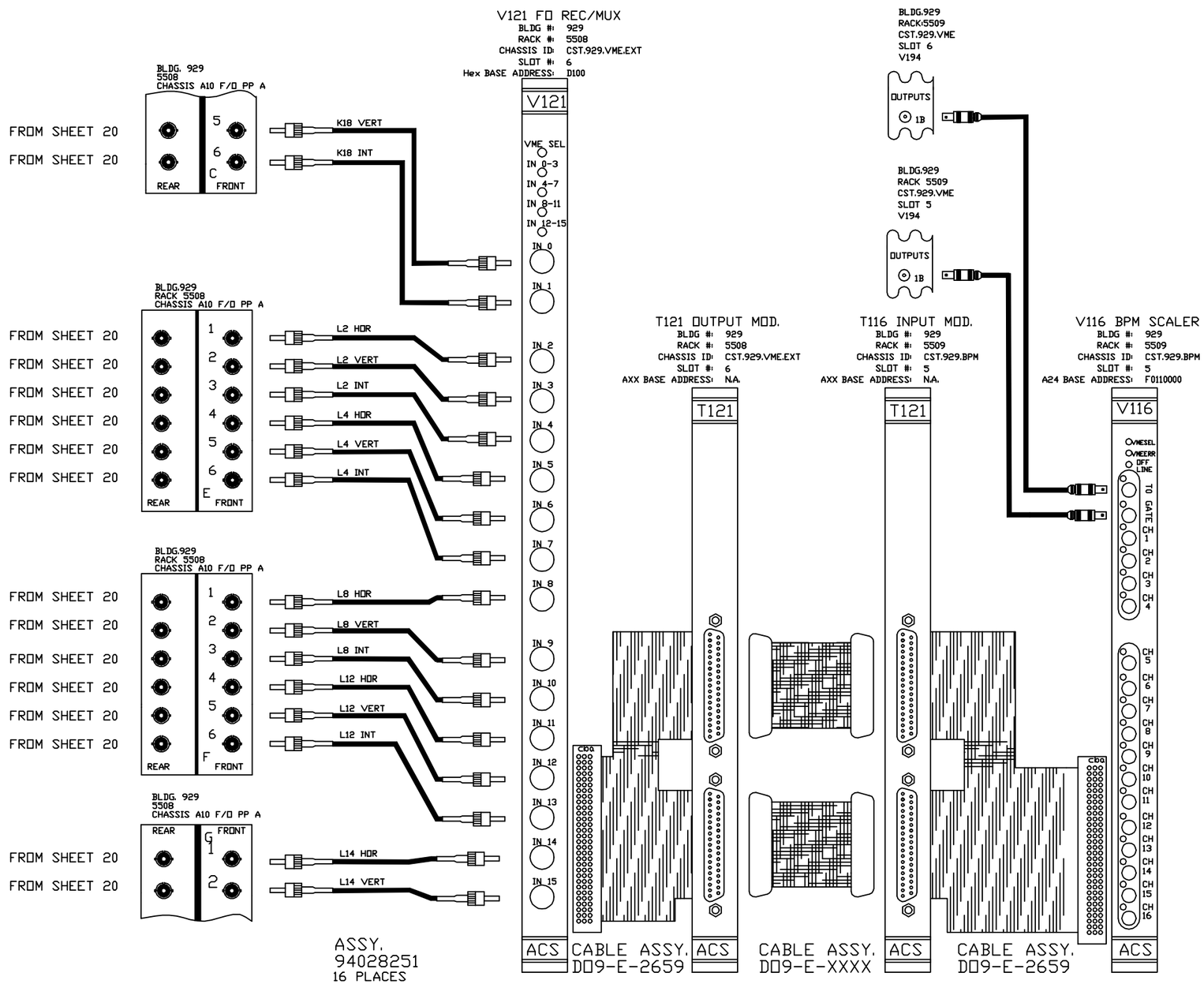

REV.	ZONE	ECN NO.	DATE	BY	CKR	APP.

-3	-2	-1	REF DESIGNATOR	ITEM NO.	DESCRIPTION	MAT'L DWG NO./BNL NO.
	2	X		1	LEMO CABLE	A29997

QTY REQD

INTERPRET IN GENERAL ACCORDANCE WITH ASME Y14.24M-1989

UNLESS OTHERWISE SPECIFIED DIMENSIONS ARE IN INCHES

DECIMAL TOLERANCES
.X ±.030
.XX ±.015
.XXX ±.005
ANGULAR TOLERANCE
± .5°

NA FINISH

BREAK SHARP EDGES
MAX. XX MIN. XX

OUTSTANDING ECN

Q.A. CATEGORY A-3		DATE
DRAWN BY	CZACHOR	02/03/98
CHECKED BY		
DESIGN APPROVAL		
ENGINEER APPROVAL		
SUPVR. APPROVAL		

NEXT ASSEMBLY

BROOKHAVEN NATIONAL LABORATORY
ASSOCIATED UNIVERSITIES, INC.
UPTON, N.Y. 11973

BEAM POSITION MONITOR
FO-PP; V121; V116
CABLING

SIZE D | DRAWING NUMBER DO9-E-XXXX | REV. A

MATERIAL: — N/A | SCALE: N/A | WEIGHT: N/A | SHEET 7 OF X

*AUTOCAD

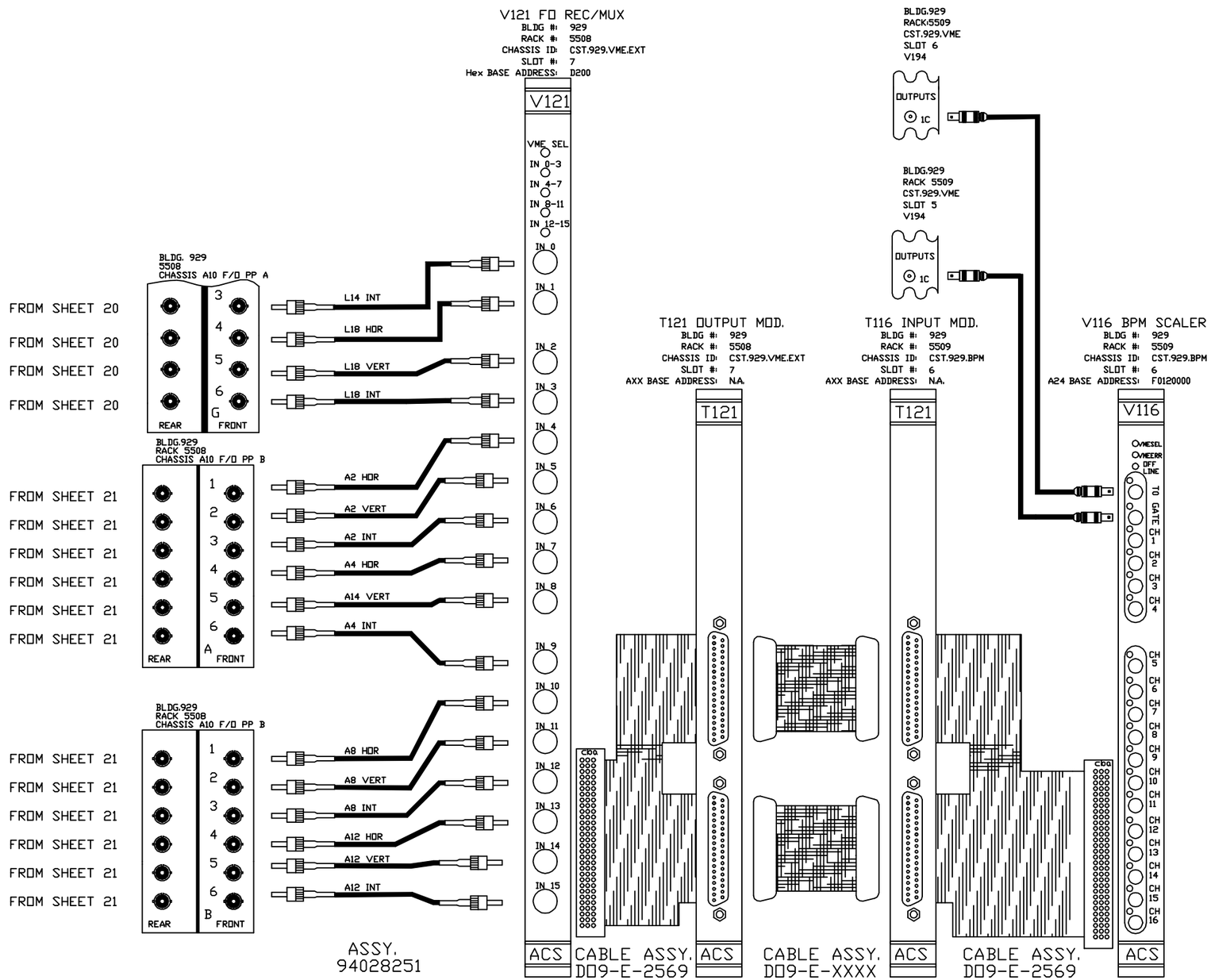

REV.	ZONE	ECN NO.	DATE	BY	CKR	APP.

QTY REQD -3	QTY REQD -2	QTY REQD -1	REF DESIGNATOR	ITEM NO.	DESCRIPTION	MAT'L DWG NO./DWG NO.
		2	X	1	LEMO CABLES	A29997

INTERPRET IN GENERAL ACCORDANCE WITH ASME Y14.24M-1989

UNLESS OTHERWISE SPECIFIED DIMENSIONS ARE IN INCHES

DECIMAL TOLERANCES
.X ±.030
.XX ±.015
.XXX ±.005
ANGULAR TOLERANCE
± .5°

OUTSTANDING ECN

NA FINISH

BREAK SHARP EDGES
MAX. XX MIN. XX

Q.A. CATEGORY A-3		DATE
DRAWN BY	CZACHOR	02/03/98
CHECKED BY		
DESIGN APPROVAL		
ENGINEER APPROVAL		
SUPVR. APPROVAL		

NEXT ASSEMBLY

BROOKHAVEN NATIONAL LABORATORY
ASSOCIATED UNIVERSITIES, INC.
UPTON, N.Y. 11973

BEAM POSITION MONITOR

FO-PP; V121; V116

CABLING

SIZE D — DRAWING NUMBER D09-E-XXXX — REV. A

MATERIAL: — N/A — SCALE: N/A — WEIGHT: N/A — SHEET 8 OF X

*AUTOCAD

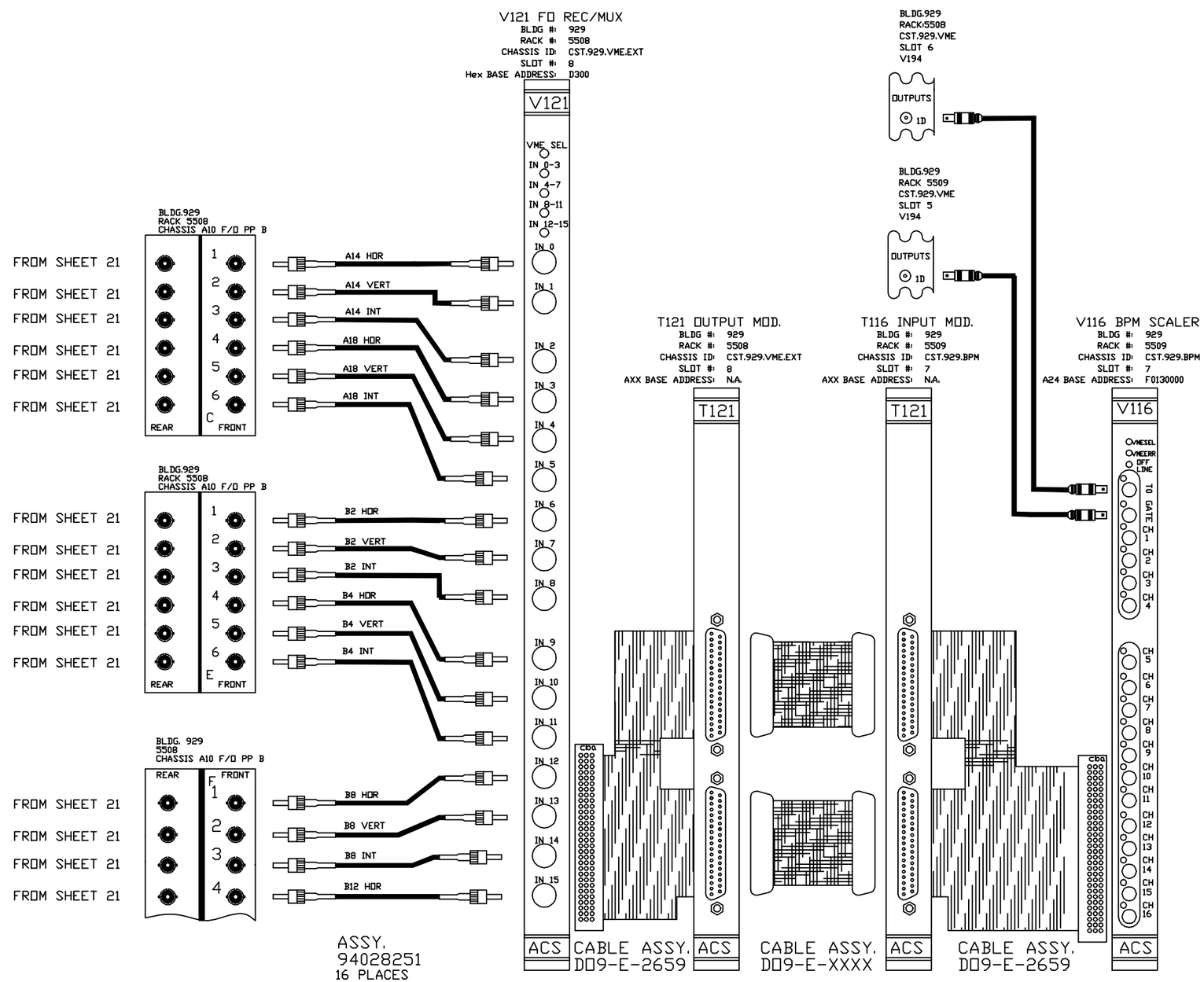

REV.	ZONE	ECN NO.	DATE	BY	CKR	APP.

-3	-2	-1	REF DESIGNATOR	ITEM NO.	DESCRIPTION	MAT'L DWG NO./BNL NO.
	2	X		1	LEMO CABLE	A29997

QTY REQD

INTERPRET IN GENERAL ACCORDANCE WITH ASME Y14.24M-1989

UNLESS OTHERWISE SPECIFIED DIMENSIONS ARE IN INCHES

DECIMAL TOLERANCES
.X ±.030
.XX ±.015
.XXX ±.005
ANGULAR TOLERANCE
± .5°

NA FINISH

BREAK SHARP EDGES
MAX. XX MIN. XX

OUTSTANDING ECN

Q.A. CATEGORY A-3

		DATE
DRAWN BY	CZACHOR	02/03/98
CHECKED BY		
DESIGN APPROVAL		
ENGINEER APPROVAL		
SUPVR. APPROVAL		

NEXT ASSEMBLY

BROOKHAVEN NATIONAL LABORATORY
ASSOCIATED UNIVERSITIES, INC.
UPTON, N.Y. 11973

BEAM POSITION MONITOR

FO-PP; V121; V116

CABLING

SIZE D

DRAWING NUMBER DO9-E-XXXX

REV. A

MATERIAL: — N/A SCALE: N/A WEIGHT: N/A SHEET 9 OF X

*AUTOCAD

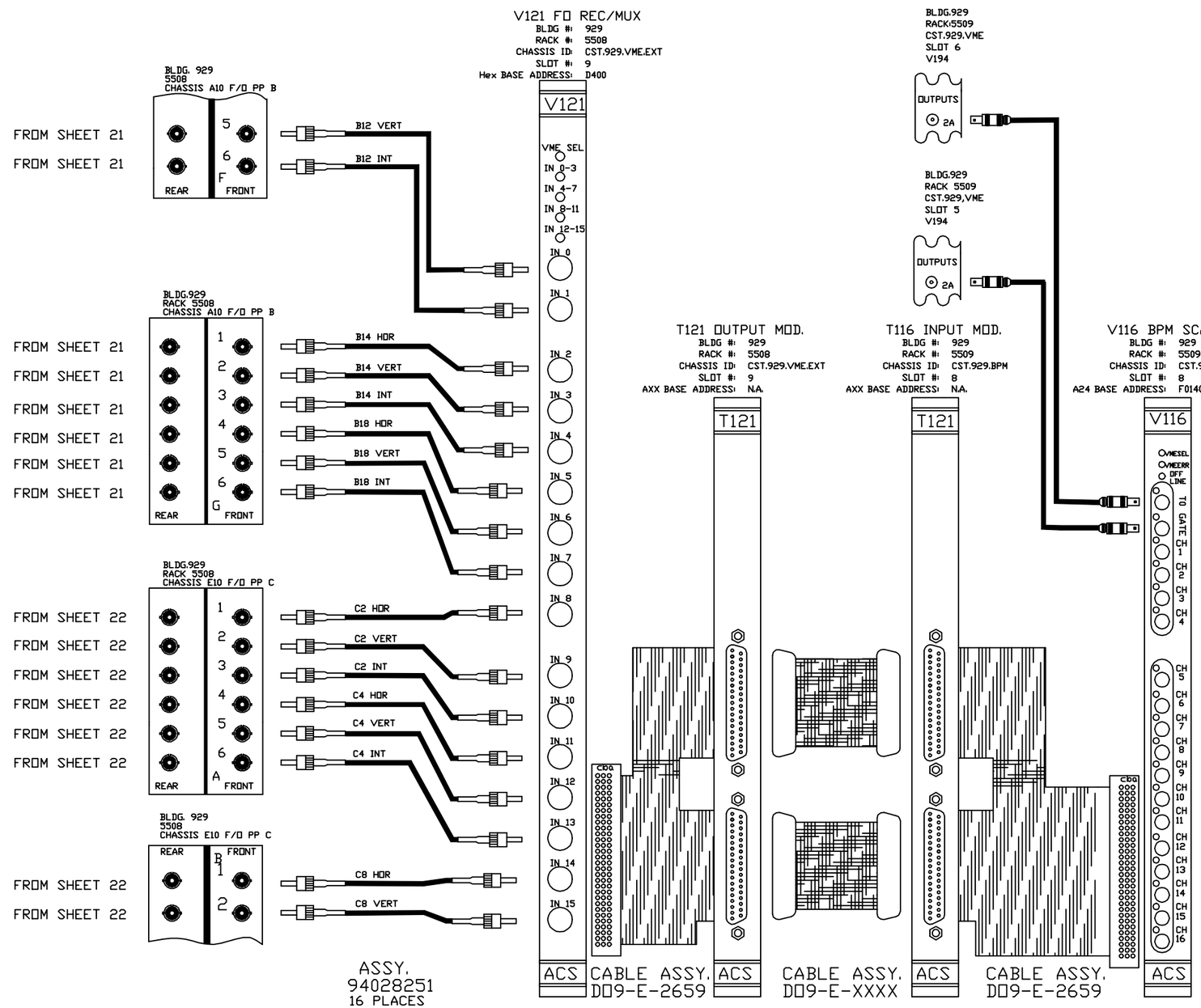

REV.	ZONE	ECN NO.	DATE	BY	CKR	APP.

QTY REQD -3	QTY REQD -2	QTY REQD -1	REF DESIGNATOR	ITEM NO.	DESCRIPTION	MAT'L DWG NO./BNL NO.
	2	X		1	LEMO CABLE	A29997

INTERPRET IN GENERAL ACCORDANCE WITH ASME Y14.24M-1989

UNLESS OTHERWISE SPECIFIED DIMENSIONS ARE IN INCHES

DECIMAL TOLERANCES
.X ±.030
.XX ±.015
.XXX ±.005
ANGULAR TOLERANCE
± .5°

NA FINISH

BREAK SHARP EDGES
MAX. XX MIN. XX

OUTSTANDING ECN

Q.A. CATEGORY A-3		DATE
DRAWN BY	CZACHOR	02/03/98
CHECKED BY		
DESIGN APPROVAL		
ENGINEER APPROVAL		
SUPVR. APPROVAL		

NEXT ASSEMBLY

BROOKHAVEN NATIONAL LABORATORY
ASSOCIATED UNIVERSITIES, INC.
UPTON, N.Y. 11973

BEAM POSITION MONITOR

FO-PP; V121; V116

CABLING

SIZE D | DRAWING NUMBER DO9-E-XXXX | REV. A

MATERIAL: — N/A | SCALE: N/A | WEIGHT: N/A | SHEET 10 OF X

*AUTOCAD

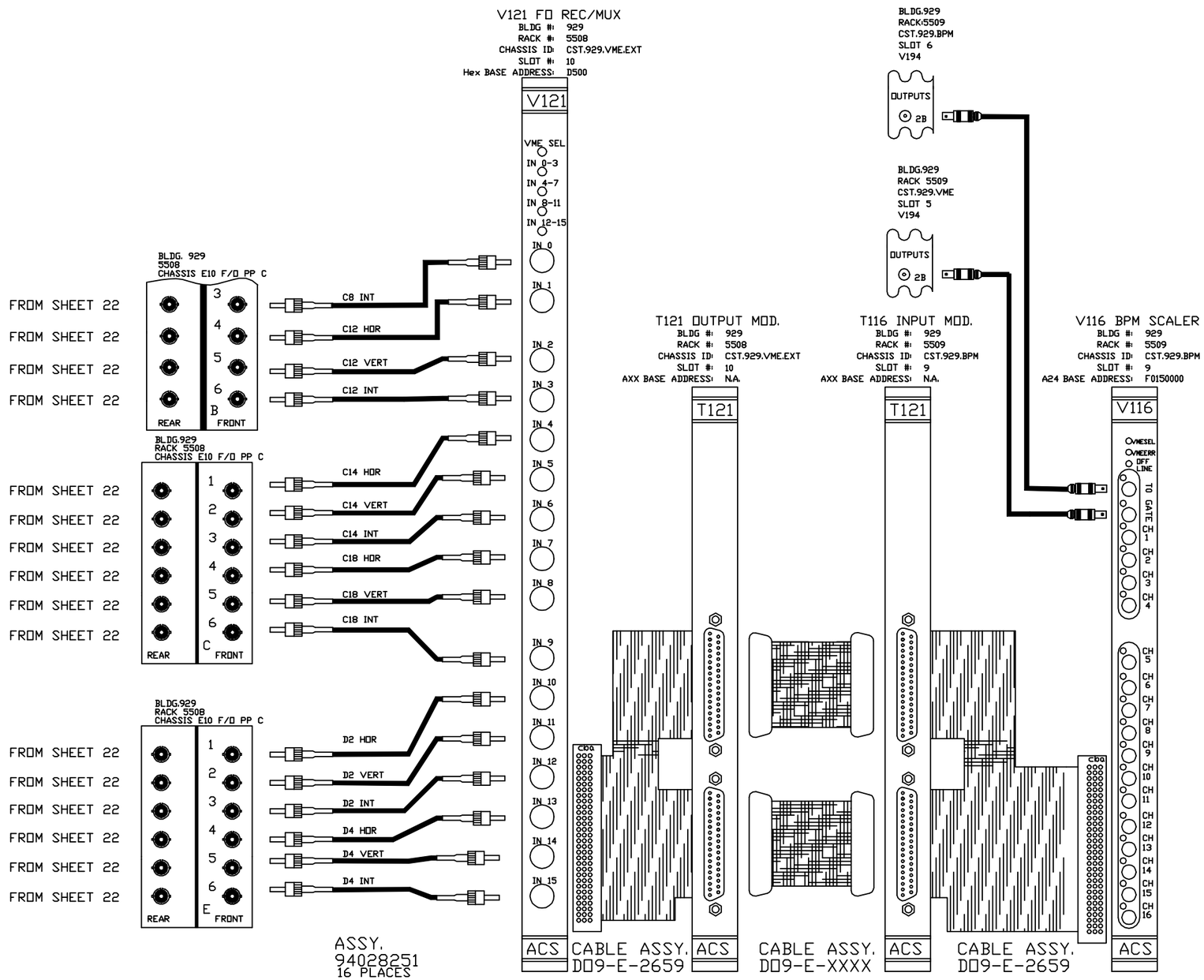

QTY REQD -3	QTY REQD -2	QTY REQD -1	REF DESIGNATOR	ITEM NO.	DESCRIPTION	MAT'L DWG NO./DWG. NO.
		2	X	1	LEMO CABLE	A29997

INTERPRET IN GENERAL ACCORDANCE WITH ASME Y14.24M-1989

UNLESS OTHERWISE SPECIFIED DIMENSIONS ARE IN INCHES

DECIMAL TOLERANCES
.X ±.030
.XX ±.015
.XXX ±.005
ANGULAR TOLERANCE
± .5°

FINISH: NA

BREAK SHARP EDGES
MAX. XX MIN. XX

OUTSTANDING ECN

Q.A. CATEGORY A-3

		DATE
DRAWN BY	CZACHOR	02/04/98
CHECKED BY		
DESIGN APPROVAL		
ENGINEER APPROVAL		
SUPVR. APPROVAL		

NEXT ASSEMBLY

BROOKHAVEN NATIONAL LABORATORY
ASSOCIATED UNIVERSITIES, INC.
UPTON, N.Y. 11973

BEAM POSITION MONITOR

FO-PP; V121; V116

CABLING

SIZE: D

DRAWING NUMBER: DO9-E-XXXX

REV.: A

MATERIAL: — N/A | SCALE: N/A | WEIGHT: N/A | SHEET 11 OF X

*AUTOCAD

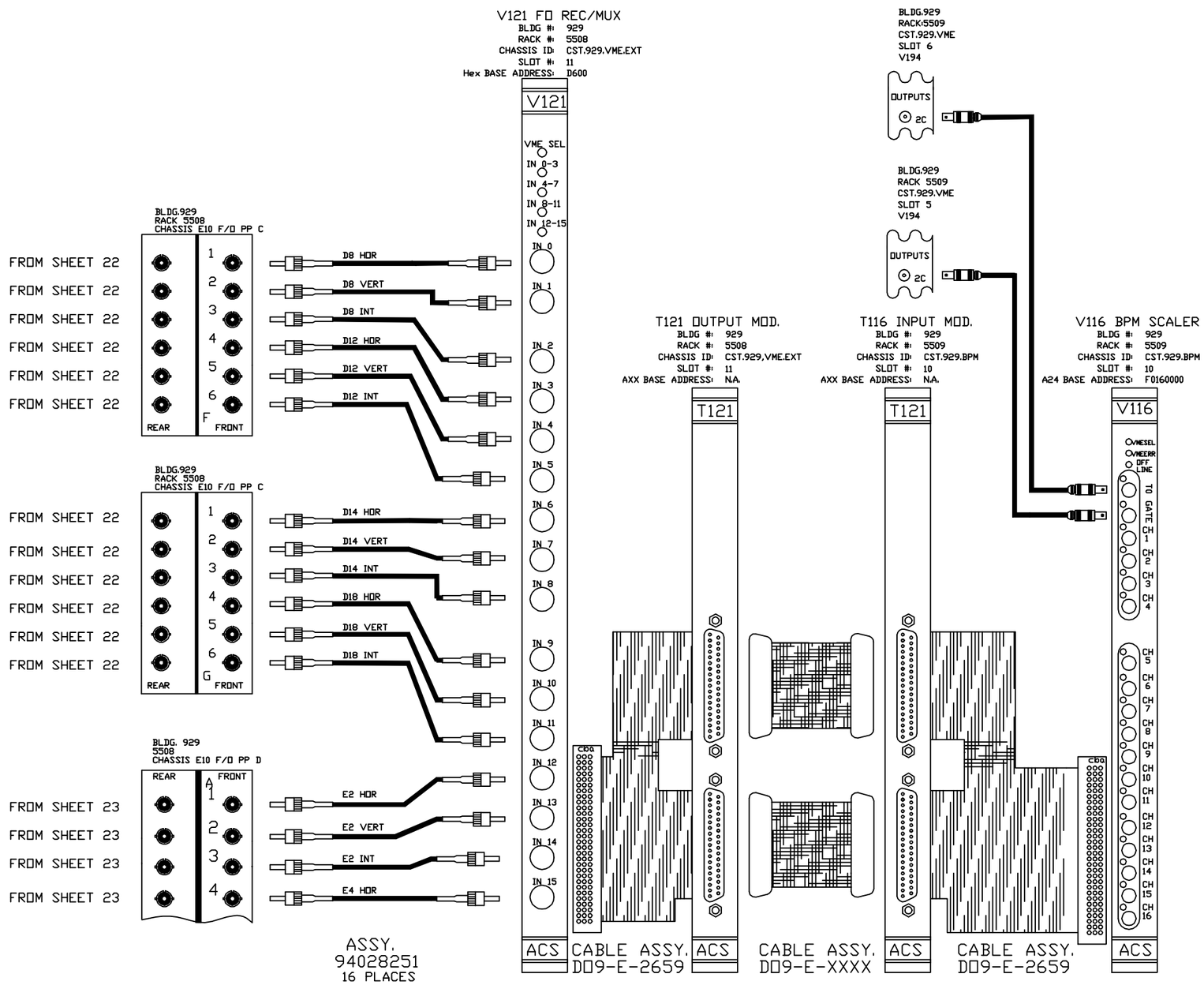

REV.	ZONE	ECN NO.	DATE	BY	CKR	APP.

-3	-2	-1	REF DESIGNATOR	ITEM NO.	DESCRIPTION	MAT'L DWG NO./BNL NO.
	2	X		1	LEMO CABLE	A29997

QTY REQD

INTERPRET IN GENERAL ACCORDANCE WITH ASME Y14.24M-1989

UNLESS OTHERWISE SPECIFIED DIMENSIONS ARE IN INCHES

DECIMAL TOLERANCES
.X ±.030
.XX ±.015
.XXX ±.005
ANGULAR TOLERANCE
± .5°

NA FINISH

BREAK SHARP EDGES
MAX. XX MIN. XX

OUTSTANDING ECN

Q.A. CATEGORY A-3		DATE
DRAWN BY	CZACHOR	02/04/98
CHECKED BY		
DESIGN APPROVAL		
ENGINEER APPROVAL		
SUPVR. APPROVAL		

NEXT ASSEMBLY

BROOKHAVEN NATIONAL LABORATORY
ASSOCIATED UNIVERSITIES, INC.
UPTON, N.Y. 11973

BEAM POSITION MONITOR
FO-PP; V121; V116
CABLING

SIZE D
DRAWING NUMBER D09-E-XXXX
REV. A

MATERIAL: — N/A | SCALE: N/A | WEIGHT: N/A | SHEET 12 OF X

*AUTOCAD

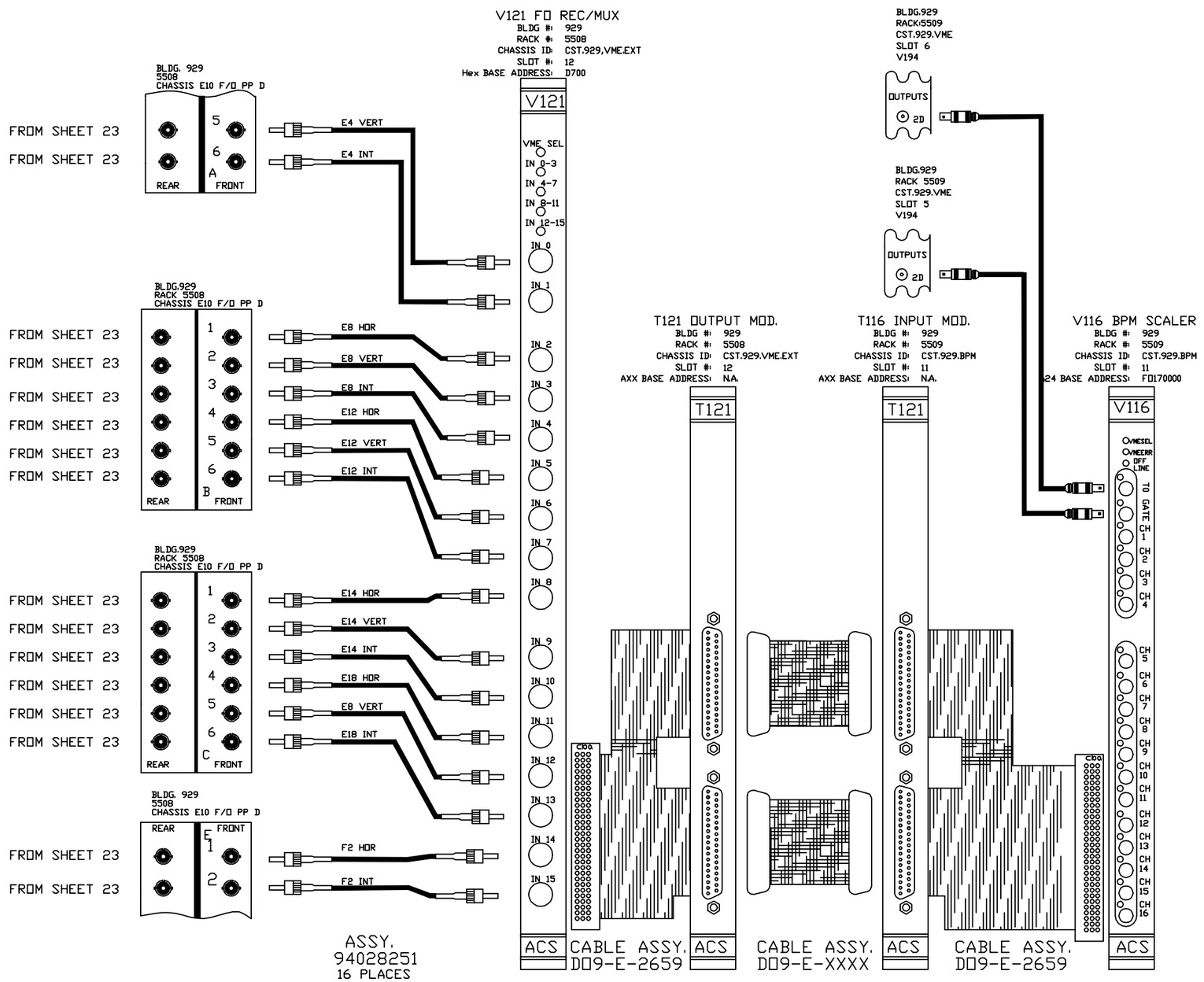

REV.	ZONE	ECN NO.	DATE	BY	CKR	APP.

-3	-2	-1	QTY REQD	REF DESIGNATOR	ITEM NO.	DESCRIPTION	MAT'L DWG NO./BNL NO.
		2	X		1	LEMO CABLE	A29997

INTERPRET IN GENERAL ACCORDANCE WITH ASME Y14.24M-1989

UNLESS OTHERWISE SPECIFIED DIMENSIONS ARE IN INCHES

DECIMAL TOLERANCES
.X ±.030
.XX ±.015
.XXX ±.005
ANGULAR TOLERANCE
± .5°

OUTSTANDING ECN: NA
FINISH: √
BREAK SHARP EDGES
MAX. XX MIN. XX

Q.A. CATEGORY A-3		DATE
DRAWN BY	CZACHOR	02/04/98
CHECKED BY		
DESIGN APPROVAL		
ENGINEER APPROVAL		
SUPVR. APPROVAL		

NEXT ASSEMBLY

BROOKHAVEN NATIONAL LABORATORY
ASSOCIATED UNIVERSITIES, INC.
UPTON, N.Y. 11973

BEAM POSITION MONITOR
FO-PP; V121; V116

CABLING

SIZE: D
DRAWING NUMBER: DO9-E-XXXX
REV.: A

MATERIAL: — N/A | SCALE: N/A | WEIGHT: N/A | SHEET 13 OF X

*AUTOCAD

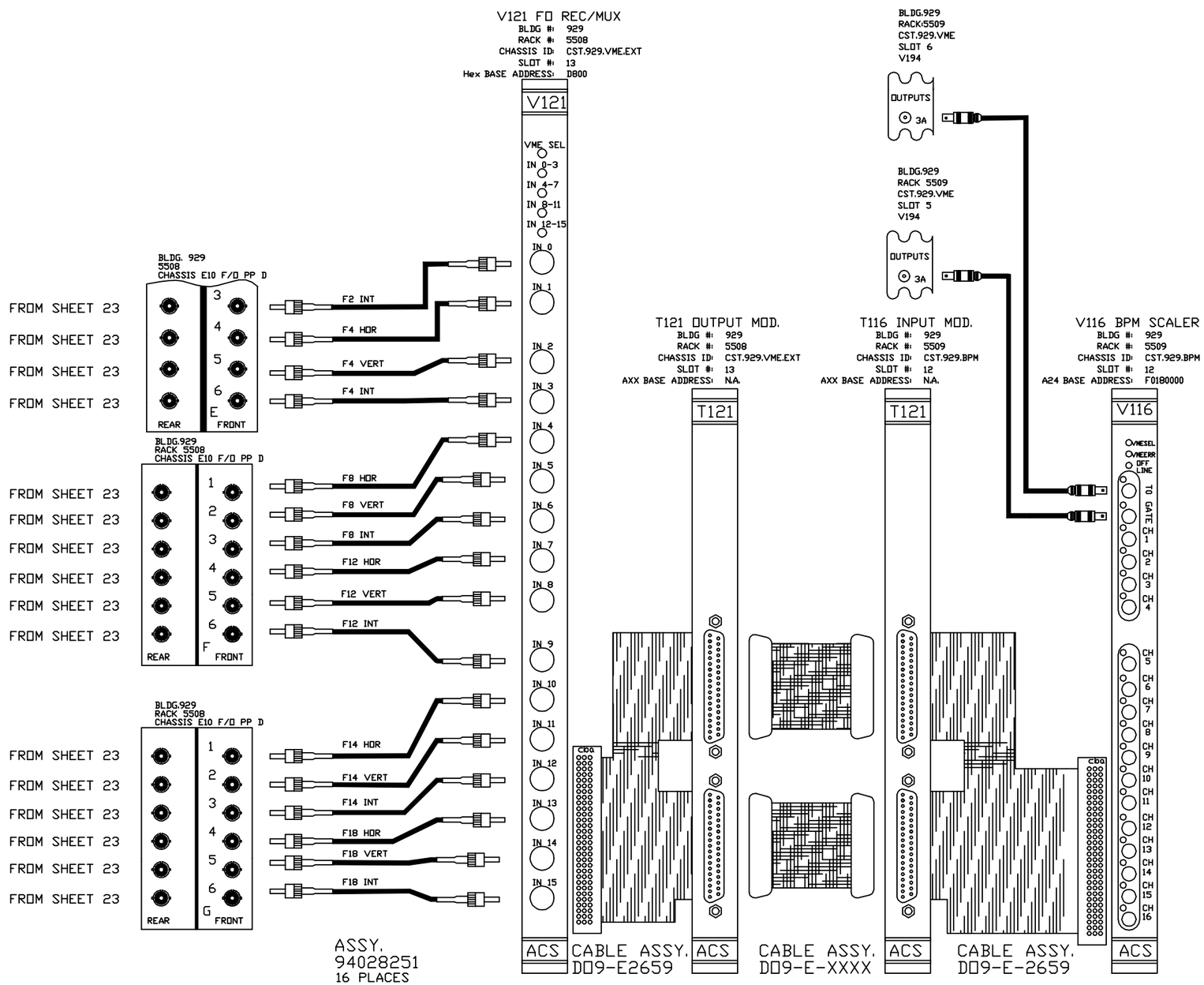

REV.	ZONE	ECN NO.	DATE	BY	CKR	APP.

QTY REQD -3	QTY REQD -2	QTY REQD -1	REF DESIGNATOR	ITEM NO.	DESCRIPTION	MAT'L DWG NO./BNL NO.
		2	X	1	LEMO CABLES	A29997

INTERPRET IN GENERAL ACCORDANCE WITH ASME Y14.24M-1989

UNLESS OTHERWISE SPECIFIED DIMENSIONS ARE IN INCHES

DECIMAL TOLERANCES
.X ±.030
.XX ±.015
.XXX ±.005
ANGULAR TOLERANCE
± .5°

OUTSTANDING ECN

NA FINISH

BREAK SHARP EDGES
MAX. XX MIN. XX

Q.A. CATEGORY A-3		DATE
DRAWN BY	CZACHOR	02/04/98
CHECKED BY		
DESIGN APPROVAL		
ENGINEER APPROVAL		
SUPVR. APPROVAL		

NEXT ASSEMBLY

BROOKHAVEN NATIONAL LABORATORY
ASSOCIATED UNIVERSITIES, INC.
UPTON, N.Y. 11973

BEAM POSITION MONITOR

FO-PP; V121; V116

CABLING

SIZE D

DO9-E-XXXX

DRAWING NUMBER

REV. A

MATERIAL: — N/A | SCALE: N/A | WEIGHT: N/A | SHEET 14 OF X

*AUTOCAD

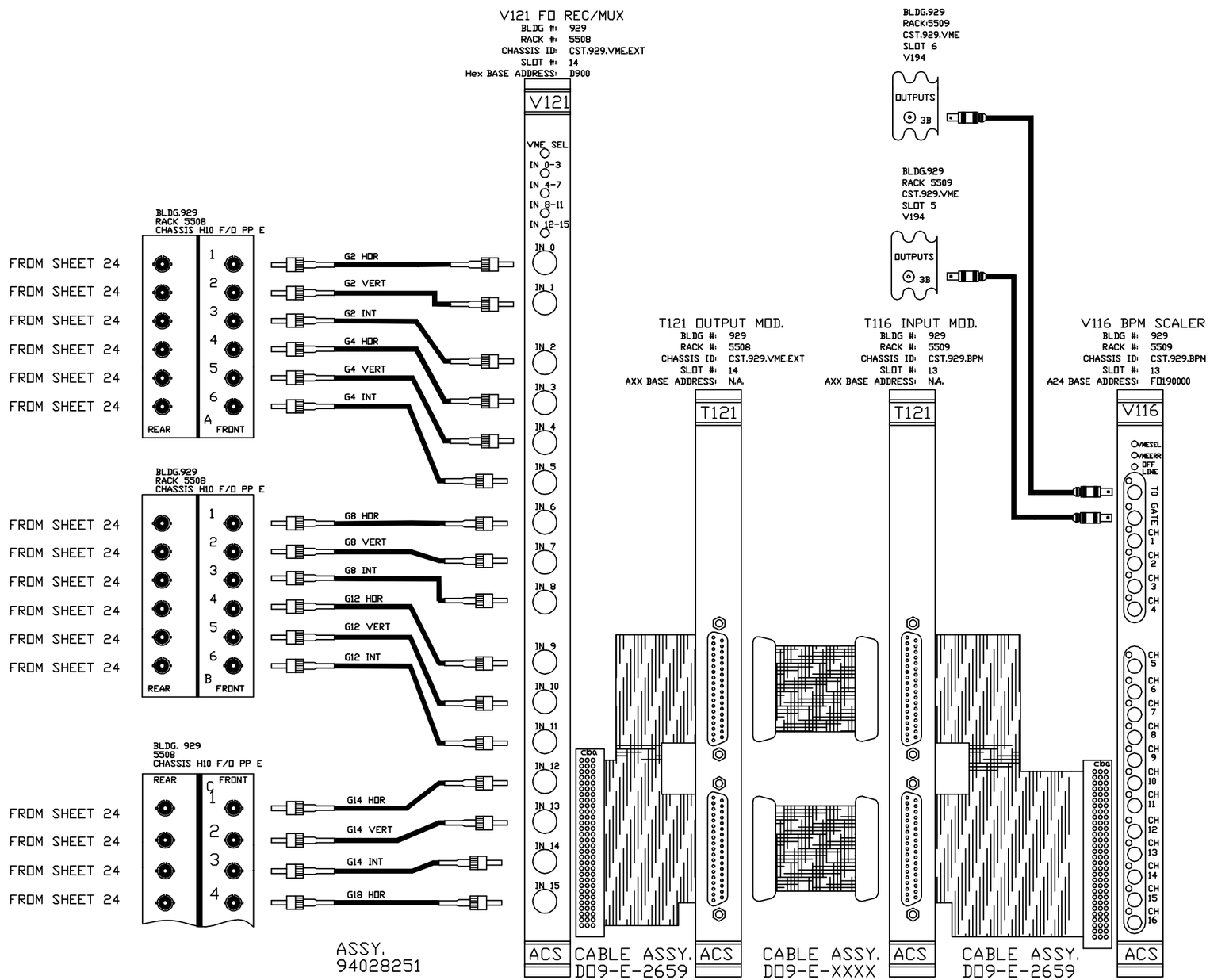

QTY REQD -3	QTY REQD -2	QTY REQD -1	REF DESIGNATOR	ITEM NO.	DESCRIPTION	MAT'L DWG NO./BNL NO.
	2	X		1	LEMO CABLE	A29997

INTERPRET IN GENERAL ACCORDANCE WITH ASME Y14.24M-1989

UNLESS OTHERWISE SPECIFIED DIMENSIONS ARE IN INCHES

DECIMAL TOLERANCES
.X ±.030
.XX ±.015
.XXX ±.005
ANGULAR TOLERANCE
± .5°

NA FINISH

BREAK SHARP EDGES
MAX. XX MIN. XX

OUTSTANDING ECN

Q.A. CATEGORY A-3		DATE
DRAWN BY	CZACHOR	02/04/98
CHECKED BY		
DESIGN APPROVAL		
ENGINEER APPROVAL		
SUPVR. APPROVAL		

NEXT ASSEMBLY

BROOKHAVEN NATIONAL LABORATORY
ASSOCIATED UNIVERSITIES, INC.
UPTON, N.Y. 11973

BEAM POSITION MONITOR
FO-PP; V121; V116
CABLING

SIZE D
DRAWING NUMBER DO9-E-XXXX
REV. A

MATERIAL: — N/A | SCALE: N/A | WEIGHT: N/A | SHEET 15 OF X

*AUTOCAD

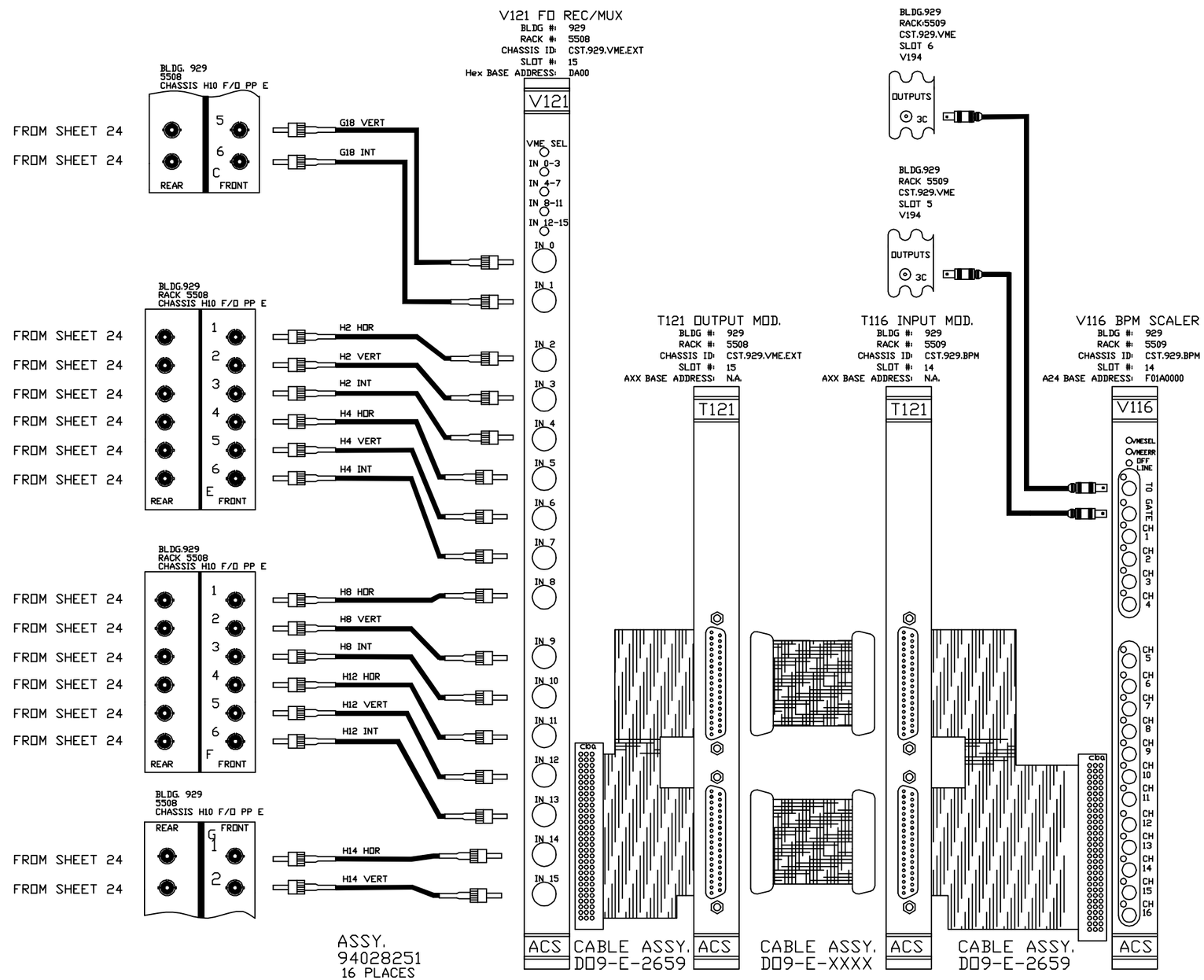

REV.	ZONE	ECN NO.	DATE	BY	CKR	APP.

QTY REQD -3	QTY REQD -2	QTY REQD -1	REF DESIGNATOR	ITEM NO.	DESCRIPTION	MAT'L DWG NO./BNL NO.
	2	X		1	LEMO CABLE	A29997

INTERPRET IN GENERAL ACCORDANCE WITH ASME Y14.24M-1989

UNLESS OTHERWISE SPECIFIED DIMENSIONS ARE IN INCHES

DECIMAL TOLERANCES
.X ±.030
.XX ±.015
.XXX ±.005
ANGULAR TOLERANCE
± .5°

NA FINISH

BREAK SHARP EDGES
MAX. XX MIN. XX

OUTSTANDING ECN

Q.A. CATEGORY A-3		DATE
DRAWN BY	CZACHOR	02/04/98
CHECKED BY		
DESIGN APPROVAL		
ENGINEER APPROVAL		
SUPVR. APPROVAL		

NEXT ASSEMBLY

BROOKHAVEN NATIONAL LABORATORY
ASSOCIATED UNIVERSITIES, INC.
UPTON, N.Y. 11973

BEAM POSITION MONITOR
FO-PP; V121; V116

CABLING

SIZE D | DO9-E-XXXX | REV. A
DRAWING NUMBER

MATERIAL: — N/A | SCALE: N/A | WEIGHT: N/A | SHEET 16 OF X

*AUTOCAD

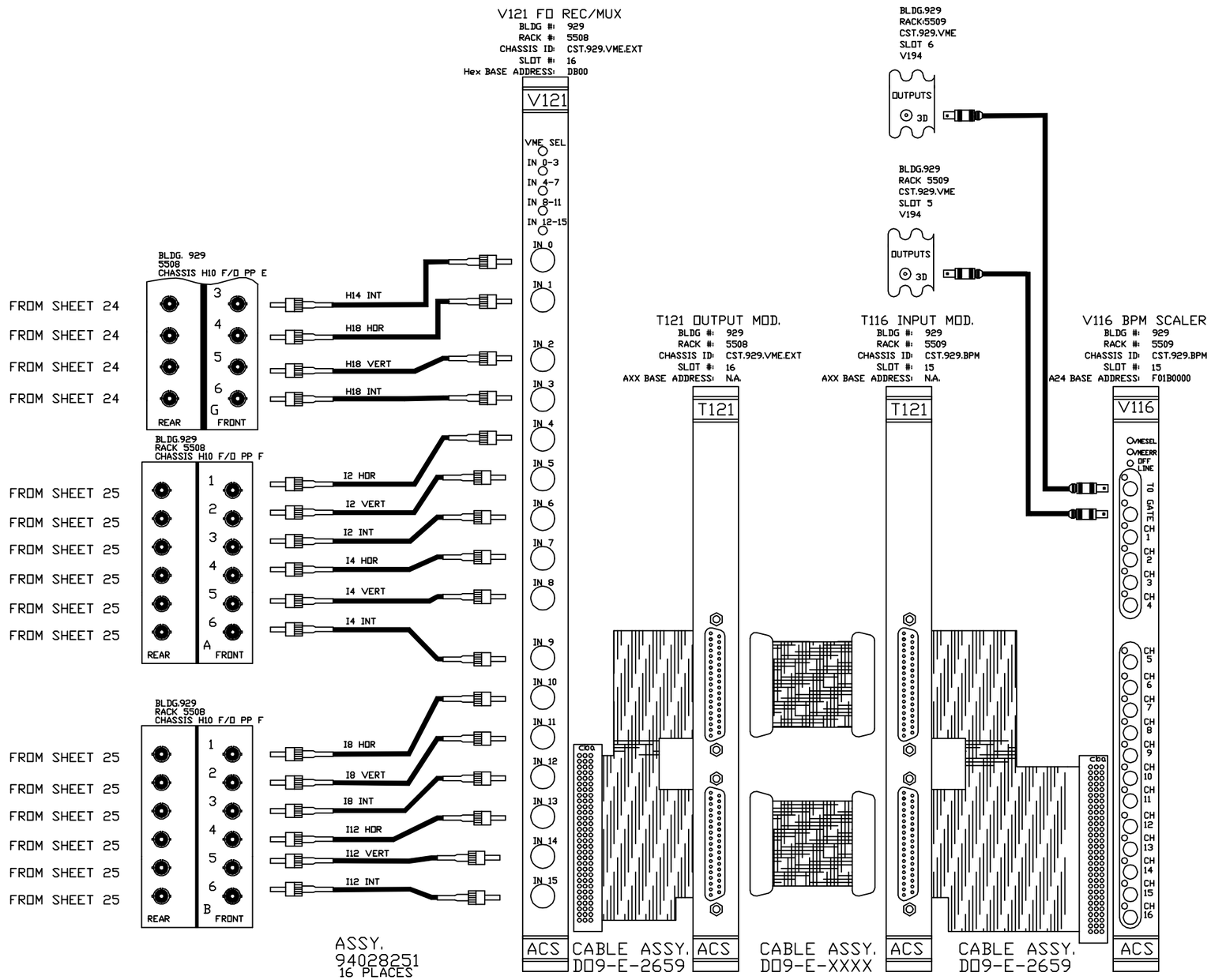

REV.	ZONE	ECN NO.	DATE	BY	CKR	APP.

QTY REQD -3	QTY REQD -2	QTY REQD -1	REF DESIGNATOR	ITEM NO.	DESCRIPTION	MAT'L DWG NO./SPEC NO.
	2	X		1	LEMO CABLE	A29997

INTERPRET IN GENERAL ACCORDANCE WITH ASME Y14.24M-1989

UNLESS OTHERWISE SPECIFIED DIMENSIONS ARE IN INCHES

DECIMAL TOLERANCES
.X ±.030
.XX ±.015
.XXX ±.005
ANGULAR TOLERANCE
± .5°

OUTSTANDING ECN

NA FINISH

BREAK SHARP EDGES
MAX. XX MIN. XX

Q.A. CATEGORY A-3		DATE
DRAWN BY	CZACHOR	02/04/98
CHECKED BY		
DESIGN APPROVAL		
ENGINEER APPROVAL		
SUPVR. APPROVAL		

NEXT ASSEMBLY

BROOKHAVEN NATIONAL LABORATORY
ASSOCIATED UNIVERSITIES, INC.
UPTON, N.Y. 11973

BEAM POSITION MONITOR

FO-PP; V121; V116

CABLING

SIZE D | DO9-E-XXXX | REV. A

DRAWING NUMBER

MATERIAL: — N/A | SCALE: N/A | WEIGHT: N/A | SHEET 17 OF X

*AUTOCAD

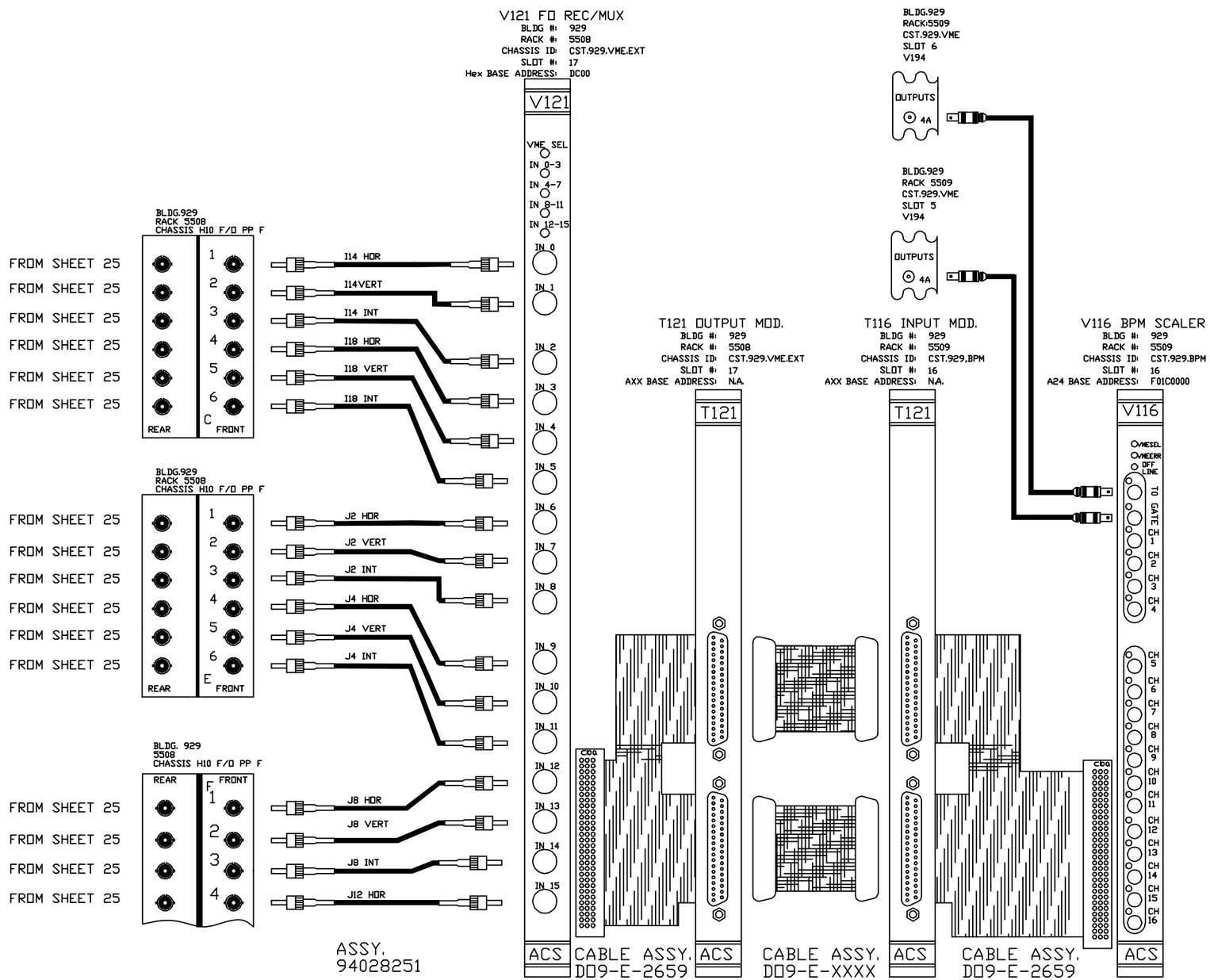

QTY REQD -3	QTY REQD -2	QTY REQD -1	REF DESIGNATOR	ITEM NO.	DESCRIPTION	MAT'L DWG NO./BNL NO.
	2	X		1	LEMO CABLE	A29997

INTERPRET IN GENERAL ACCORDANCE WITH ASME Y14.24M-1989

UNLESS OTHERWISE SPECIFIED DIMENSIONS ARE IN INCHES

DECIMAL TOLERANCES
.X ±.030
.XX ±.015
.XXX ±.005
ANGULAR TOLERANCE
± .5°

NA FINISH

BREAK SHARP EDGES
MAX. XX MIN. XX

OUTSTANDING ECN

Q.A. CATEGORY A-3		DATE
DRAWN BY	CZACHOR	02/04/98
CHECKED BY		
DESIGN APPROVAL		
ENGINEER APPROVAL		
SUPVR. APPROVAL		

NEXT ASSEMBLY

BROOKHAVEN NATIONAL LABORATORY
ASSOCIATED UNIVERSITIES, INC.
UPTON, N.Y. 11973

BEAM POSITION MONITOR
FO-PP; V121; V116

CABLING

SIZE D | DRAWING NUMBER DO9-E-XXXX | REV. A

MATERIAL: — N/A | SCALE: N/A | WEIGHT: N/A | SHEET 18 OF X

*AUTOCAD

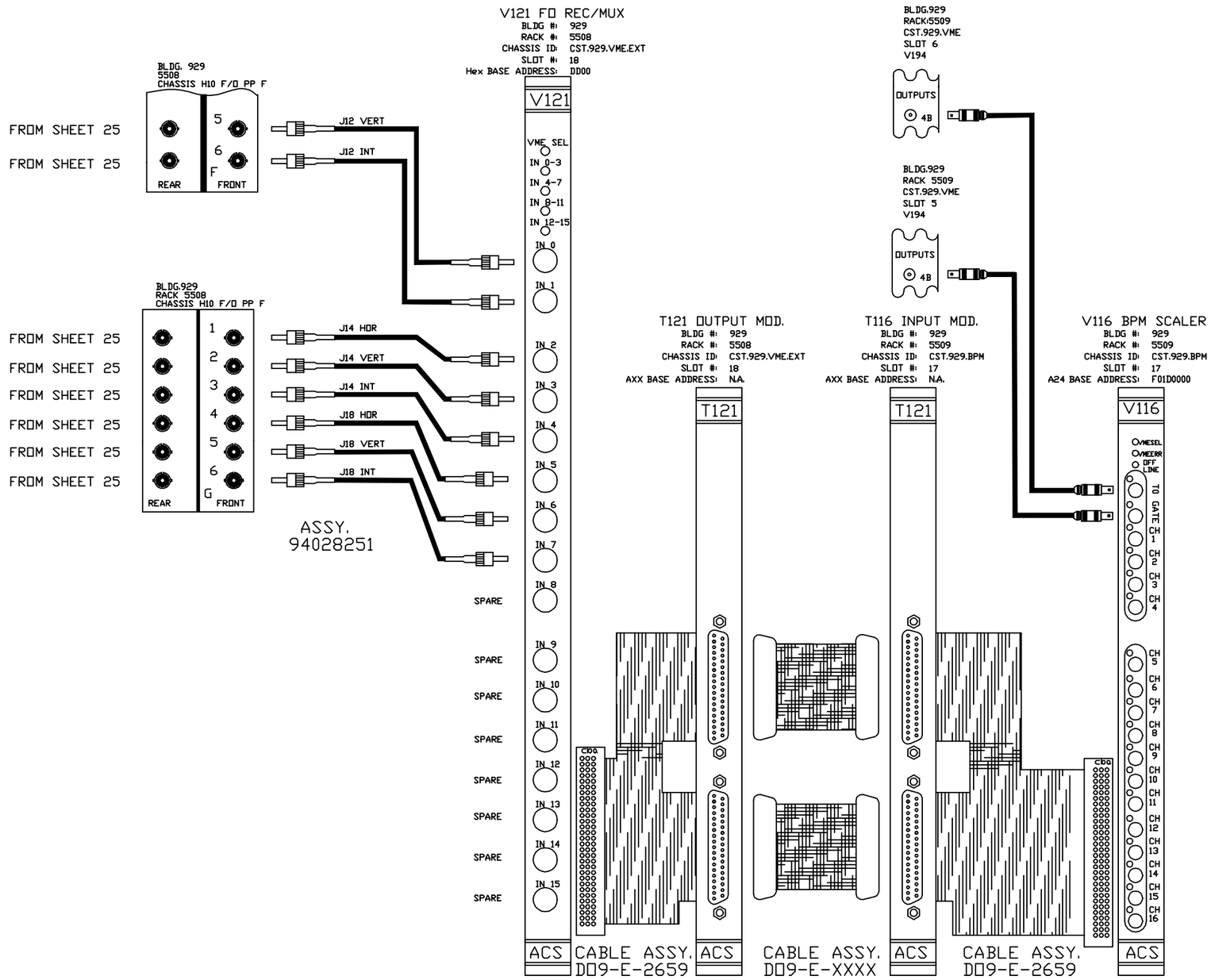

-3	-2	-1	REF DESIGNATOR	ITEM NO.	DESCRIPTION	MAT'L. DWG NO./BNL NO.
QTY REQD						

INTERPRET IN GENERAL ACCORDANCE WITH ASME Y14.24M-1989

UNLESS OTHERWISE SPECIFIED DIMENSIONS ARE IN INCHES

DECIMAL TOLERANCES
.X ±.030
.XX ±.015
.XXX ±.005
ANGULAR TOLERANCE ± .5°

OUTSTANDING ECN

NA FINISH

BREAK SHARP EDGES
MAX. XX MIN. XX

Q.A. CATEGORY A-3

		DATE
DRAWN BY	CZACHOR	02/04/98
CHECKED BY		
DESIGN APPROVAL		
ENGINEER APPROVAL		
SUPVR. APPROVAL		

NEXT ASSEMBLY

BROOKHAVEN NATIONAL LABORATORY
ASSOCIATED UNIVERSITIES, INC.
UPTON, N.Y. 11973

BEAM POSITION MONITOR

FO-PP; V121; V116

CABLING

SIZE D | DRAWING NUMBER D09-E-XXXX | REV. A

MATERIAL: — N/A | SCALE: N/A | WEIGHT: N/A | SHEET 19 OF X

*AUTOCAD

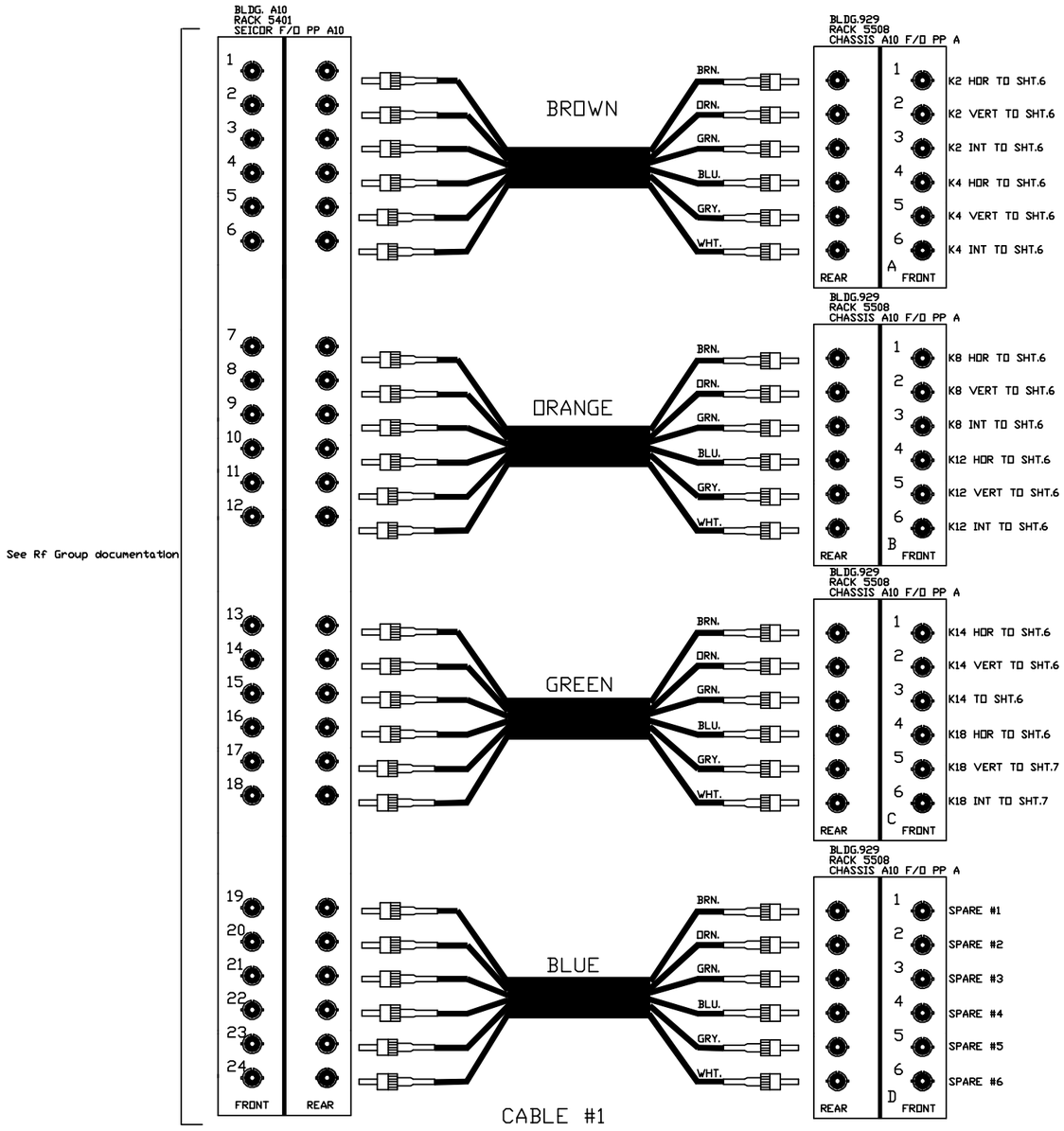

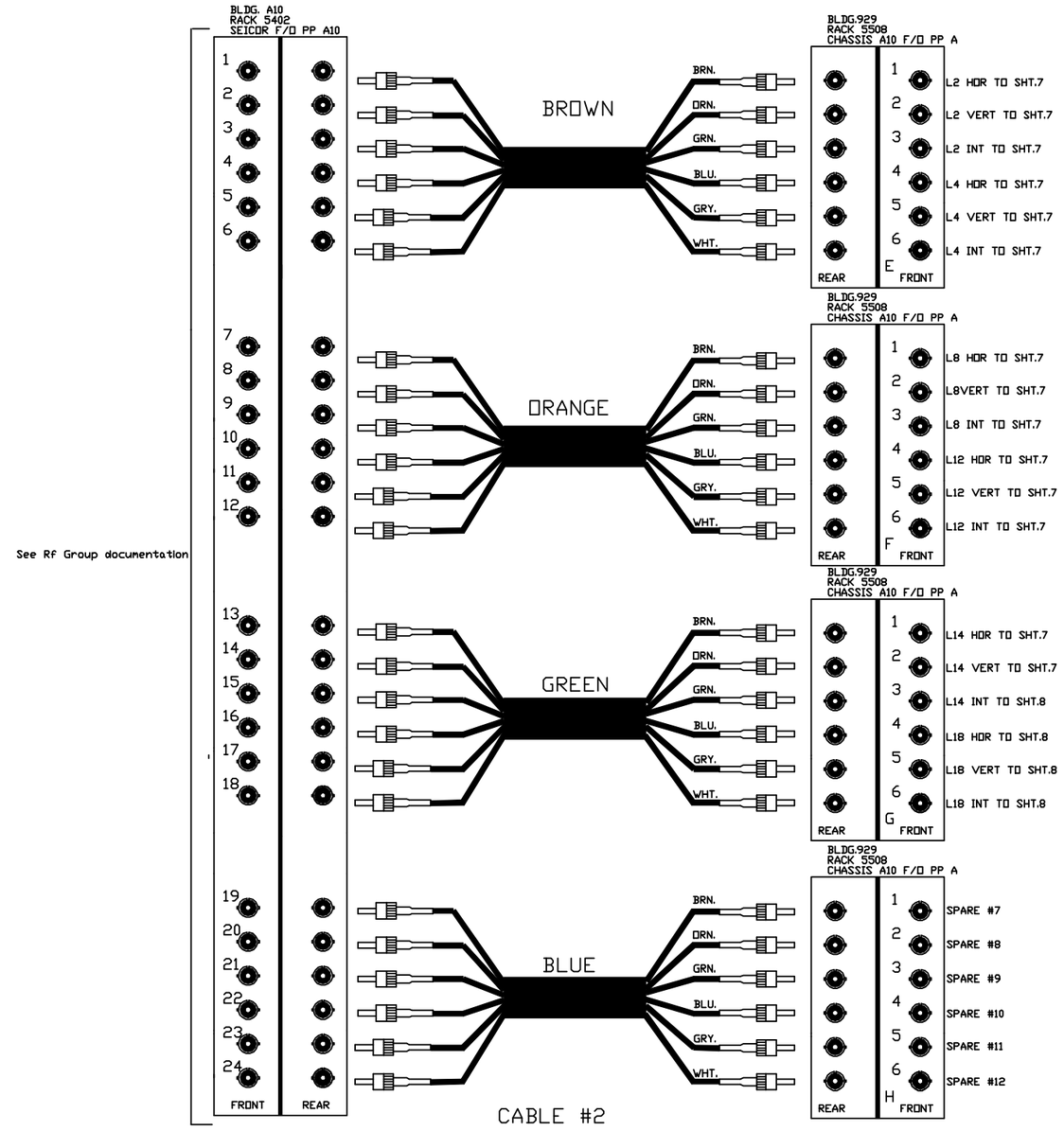

REV.	ZONE	ECN NO.	DATE	BY	CKR	APP.

-3	-2	-1	REF DESIGNATOR	ITEM NO.	DESCRIPTION	MAT'L. DWG NO./BNL NO.
QTY REQD						

INTERPRET IN GENERAL ACCORDANCE WITH ASME Y14.24M-1989

UNLESS OTHERWISE SPECIFIED DIMENSIONS ARE IN INCHES

DECIMAL TOLERANCES
.X ±.030
.XX ±.015
.XXX ±.005
ANGULAR TOLERANCE
± .5°

OUTSTANDING ECN

NA FINISH

BREAK SHARP EDGES
MAX. XX MIN. XX

Q.A. CATEGORY A-3		DATE
DRAWN BY	CZACHOR	02/04/98
CHECKED BY		
DESIGN APPROVAL		
ENGINEER APPROVAL		
SUPVR. APPROVAL		

NEXT ASSEMBLY

BROOKHAVEN NATIONAL LABORATORY
ASSOCIATED UNIVERSITIES, INC.
UPTON, N.Y. 11973

BEAM POSITION MONITOR
FIBER OPTIC SIGNAL
CABLING

SIZE D
DRAWING NUMBER D09-E-XXXX
REV. A

MATERIAL: N/A
SCALE: N/A
WEIGHT: N/A
SHEET 20 OF X

*AUTOCAD

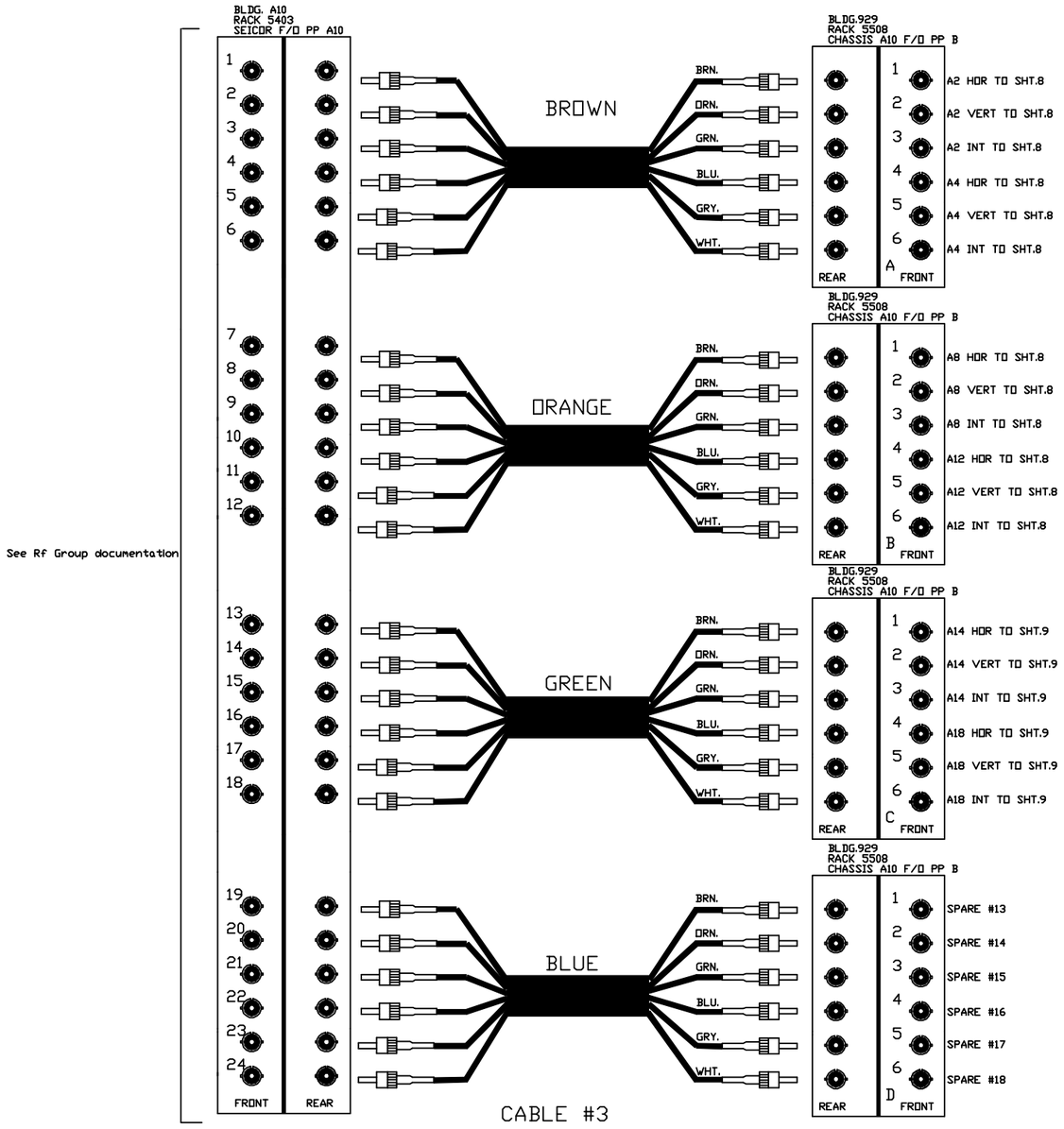

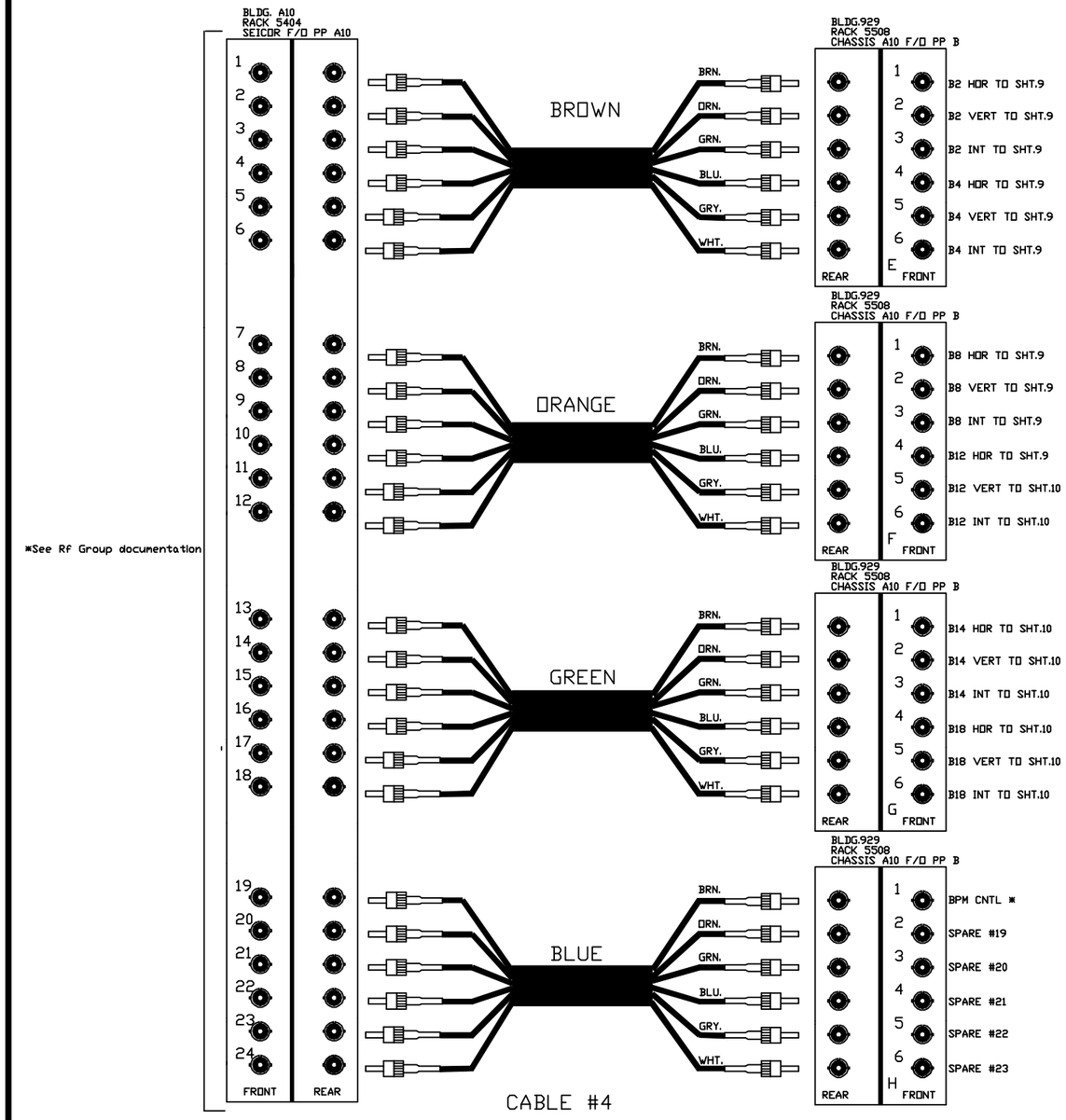

REV.	ZONE	ECN NO.	DATE	BY	CKR	APP.

-3	-2	-1	REF DESIGNATOR	ITEM NO.	DESCRIPTION	MAT'L DWG NO./BNL NO.
QTY REQD						

INTERPRET IN GENERAL ACCORDANCE WITH ASME Y14.24M-1989

UNLESS OTHERWISE SPECIFIED DIMENSIONS ARE IN INCHES
DECIMAL TOLERANCES
.X ±.030
.XX ±.015
.XXX ±.005
ANGULAR TOLERANCE
± .5°

OUTSTANDING ECN

NA FINISH

BREAK SHARP EDGES
MAX. XX MIN. XX

Q.A. CATEGORY A-3		DATE
DRAWN BY	CZACHOR	02/04/98
CHECKED BY		
DESIGN APPROVAL		
ENGINEER APPROVAL		
SUPVR. APPROVAL		

NEXT ASSEMBLY

BROOKHAVEN NATIONAL LABORATORY
ASSOCIATED UNIVERSITIES, INC.
UPTON, N.Y. 11973

BEAM POSITION MONITOR
FIBER OPTIC SIGNAL
CABLING

SIZE D | DRAWING NUMBER D09-E-XXXX | REV. A

MATERIAL: — N/A | SCALE: N/A | WEIGHT: N/A | SHEET 21 OF X

*AUTOCAD

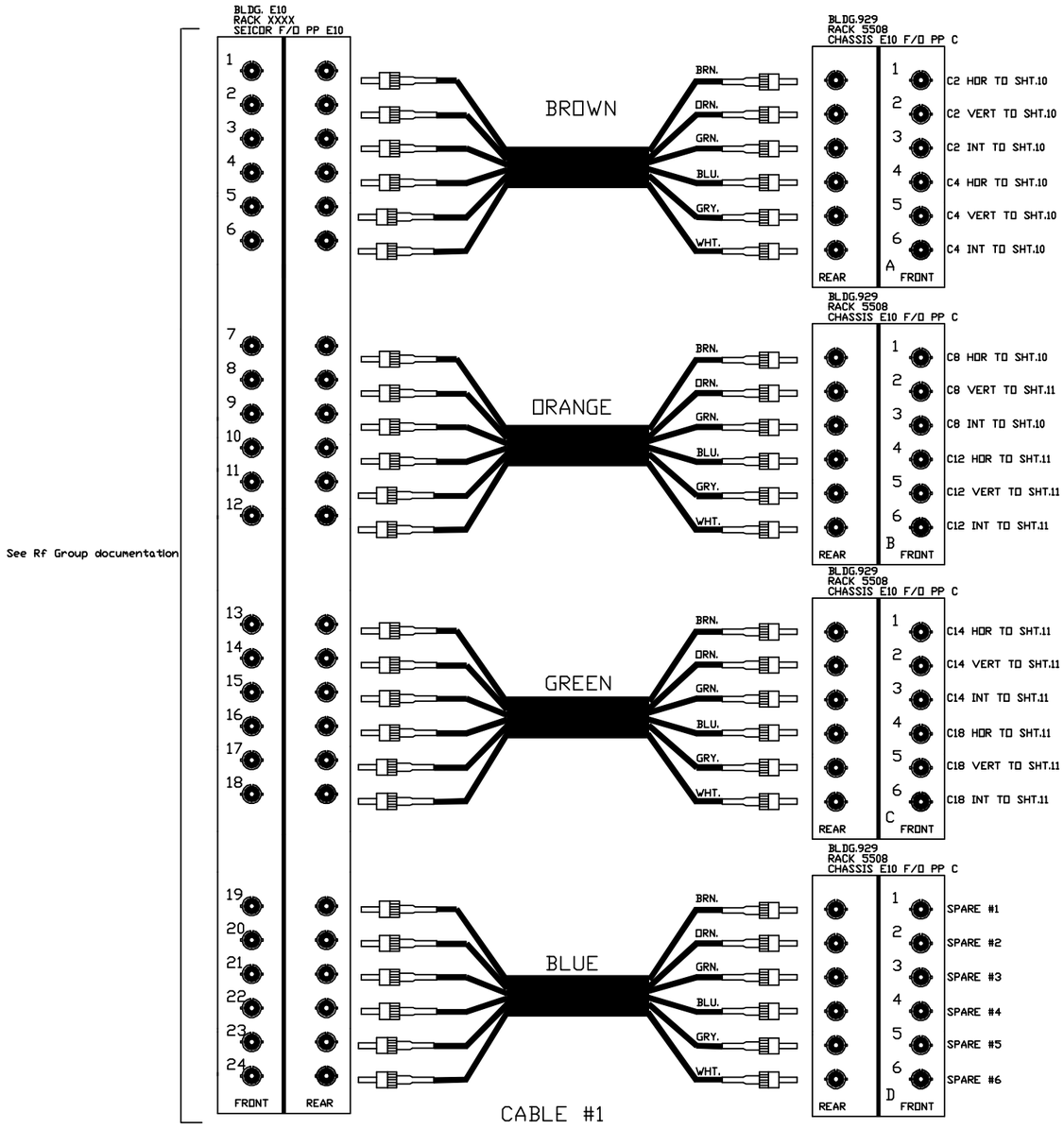

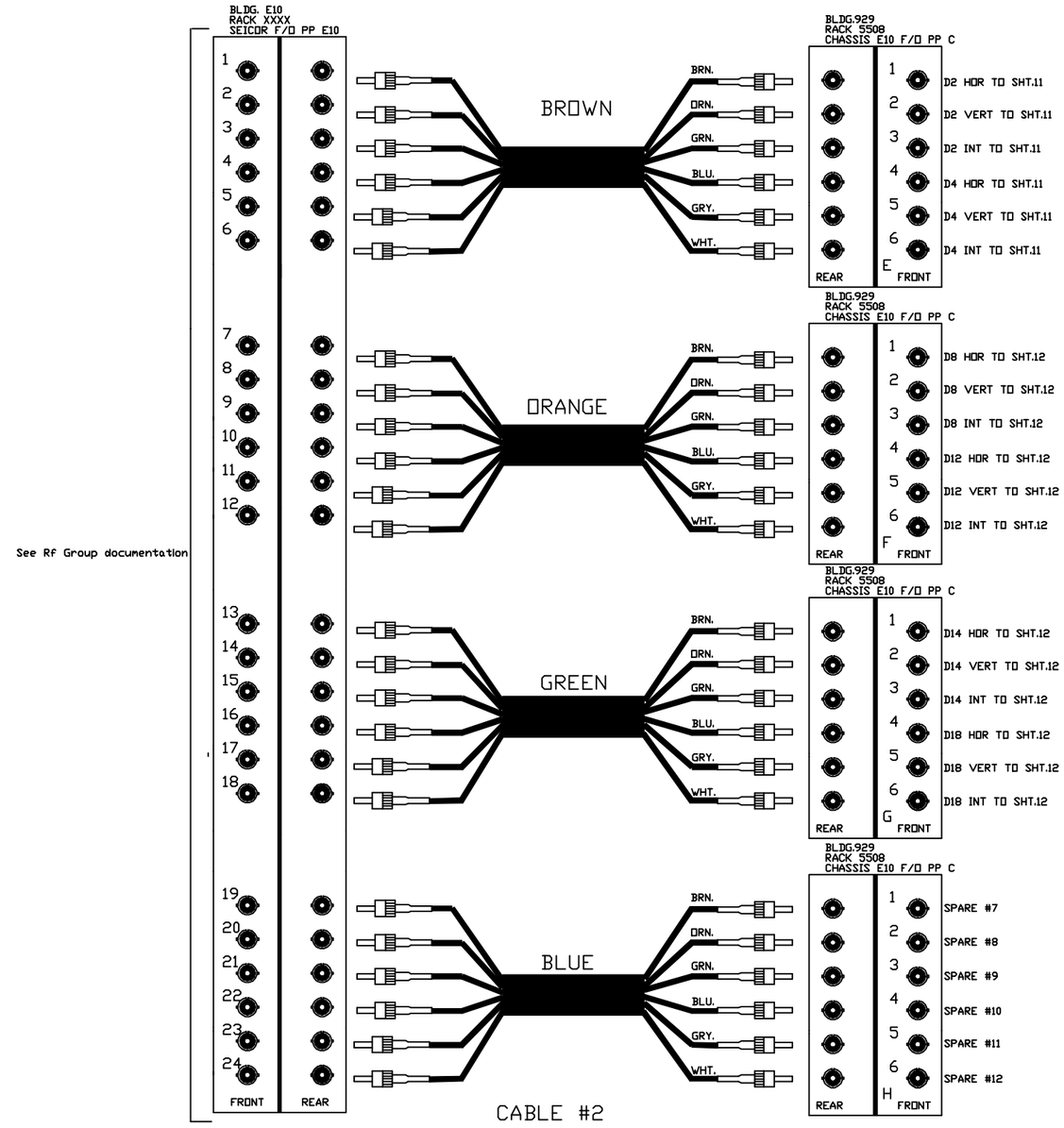

REV.	ZONE	ECN NO.	DATE	BY	CKR	APP.

-3	-2	-1	REF DESIGNATOR	ITEM NO.	DESCRIPTION	MAT'L. DWG NO./BNL NO.
QTY REQD						

INTERPRET IN GENERAL ACCORDANCE WITH ASME Y14.24M-1989

UNLESS OTHERWISE SPECIFIED DIMENSIONS ARE IN INCHES

DECIMAL TOLERANCES
.X ±.030
.XX ±.015
.XXX ±.005
ANGULAR TOLERANCE ± .5°

OUTSTANDING ECN

NA FINISH

BREAK SHARP EDGES MAX. XX MIN. XX

Q.A. CATEGORY A-3

		DATE
DRAWN BY	CZACHOR	02/04/98
CHECKED BY		
DESIGN APPROVAL		
ENGINEER APPROVAL		
SUPVR. APPROVAL		

NEXT ASSEMBLY

BROOKHAVEN NATIONAL LABORATORY
ASSOCIATED UNIVERSITIES, INC.
UPTON, N.Y. 11973

BEAM POSITION MONITOR
FIBER OPTIC SIGNAL
CABLING

SIZE D | DRAWING NUMBER D09-E-XXXX | REV. A

MATERIAL: — N/A | SCALE: N/A | WEIGHT: N/A | SHEET 22 OF X

*AUTOCAD

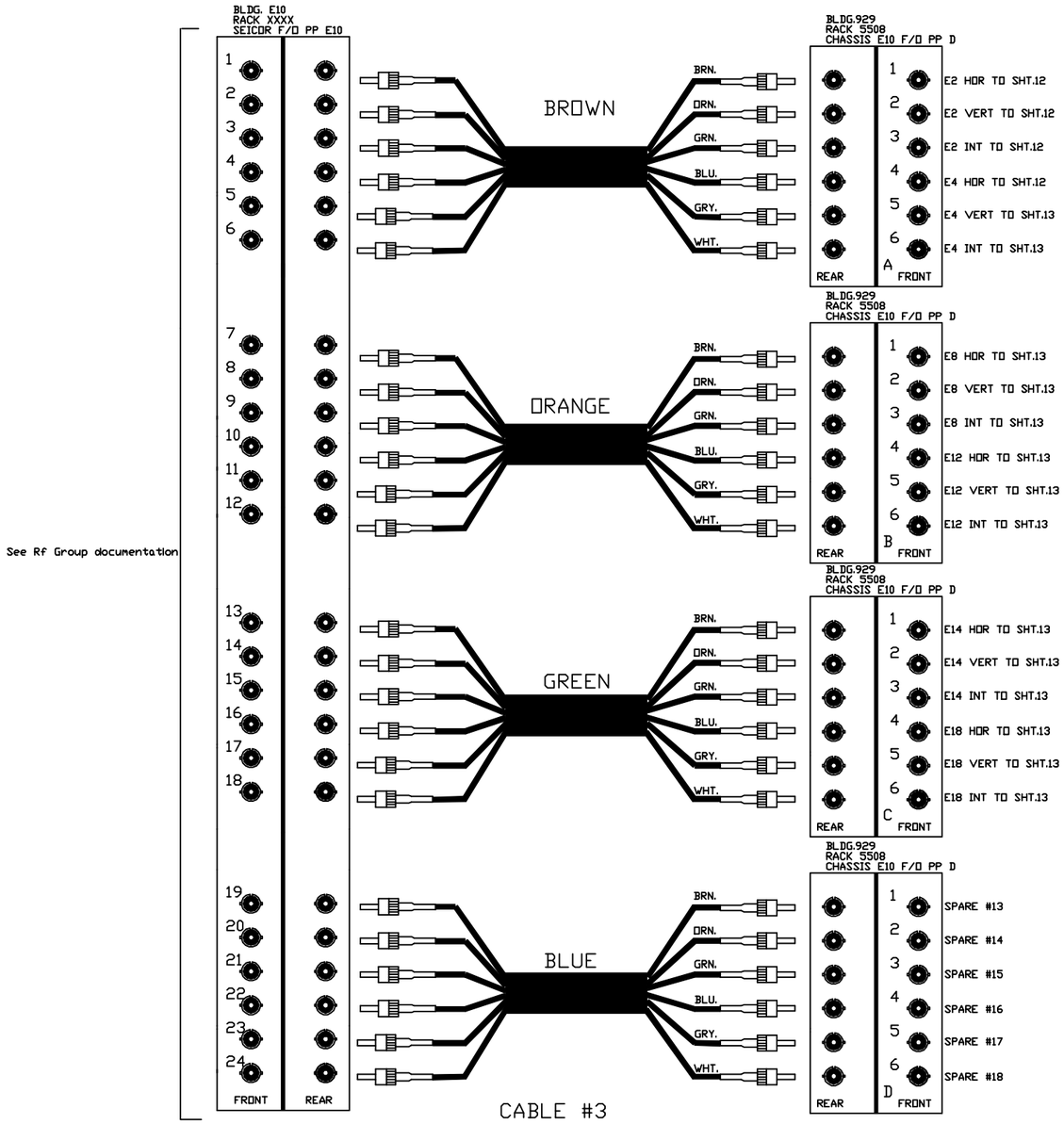

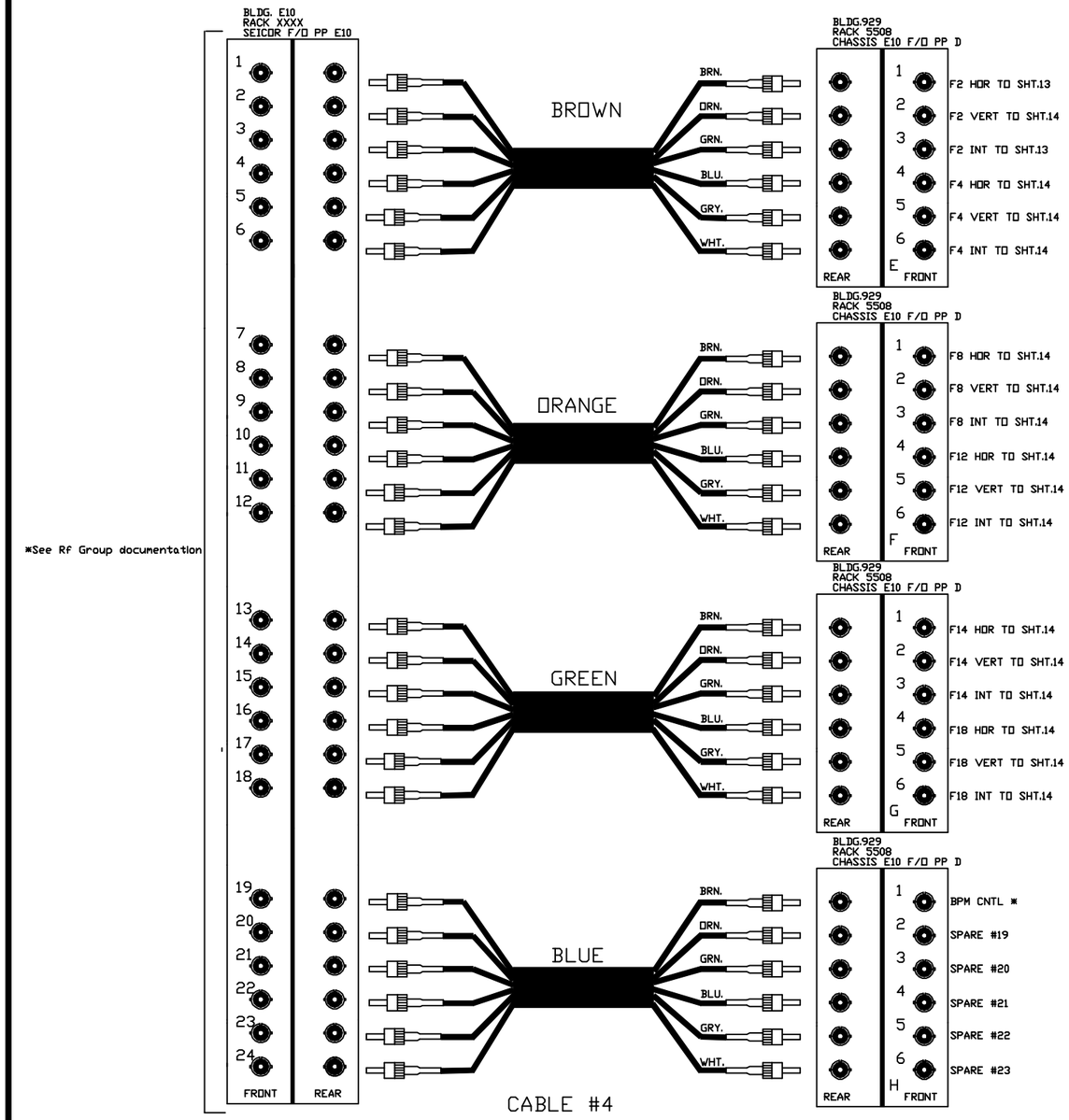

REV.	ZONE	ECN NO.	DATE	BY	CKR	APP.

-3	-2	-1	REF DESIGNATOR	ITEM NO.	DESCRIPTION	MAT'L DWG NO./BNL NO.
QTY REQD						

INTERPRET IN GENERAL ACCORDANCE WITH ASME Y14.24M-1989

UNLESS OTHERWISE SPECIFIED DIMENSIONS ARE IN INCHES

DECIMAL TOLERANCES
.X ±.030
.XX ±.015
.XXX ±.005
ANGULAR TOLERANCE ± .5°

OUTSTANDING ECN

NA FINISH

BREAK SHARP EDGES MAX. XX MIN. XX

Q.A. CATEGORY A-3

		DATE
DRAWN BY	CZACHOR	02/04/98
CHECKED BY		
DESIGN APPROVAL		
ENGINEER APPROVAL		
SUPVR. APPROVAL		

NEXT ASSEMBLY

BROOKHAVEN NATIONAL LABORATORY
ASSOCIATED UNIVERSITIES, INC.
UPTON, N.Y. 11973

BEAM POSITION MONITOR
FIBER OPTIC SIGNAL
CABLING

SIZE D | DRAWING NUMBER D09-E-XXXX | REV. A

MATERIAL: — N/A | SCALE: N/A | WEIGHT: N/A | SHEET 23 OF X

*AUTOCAD

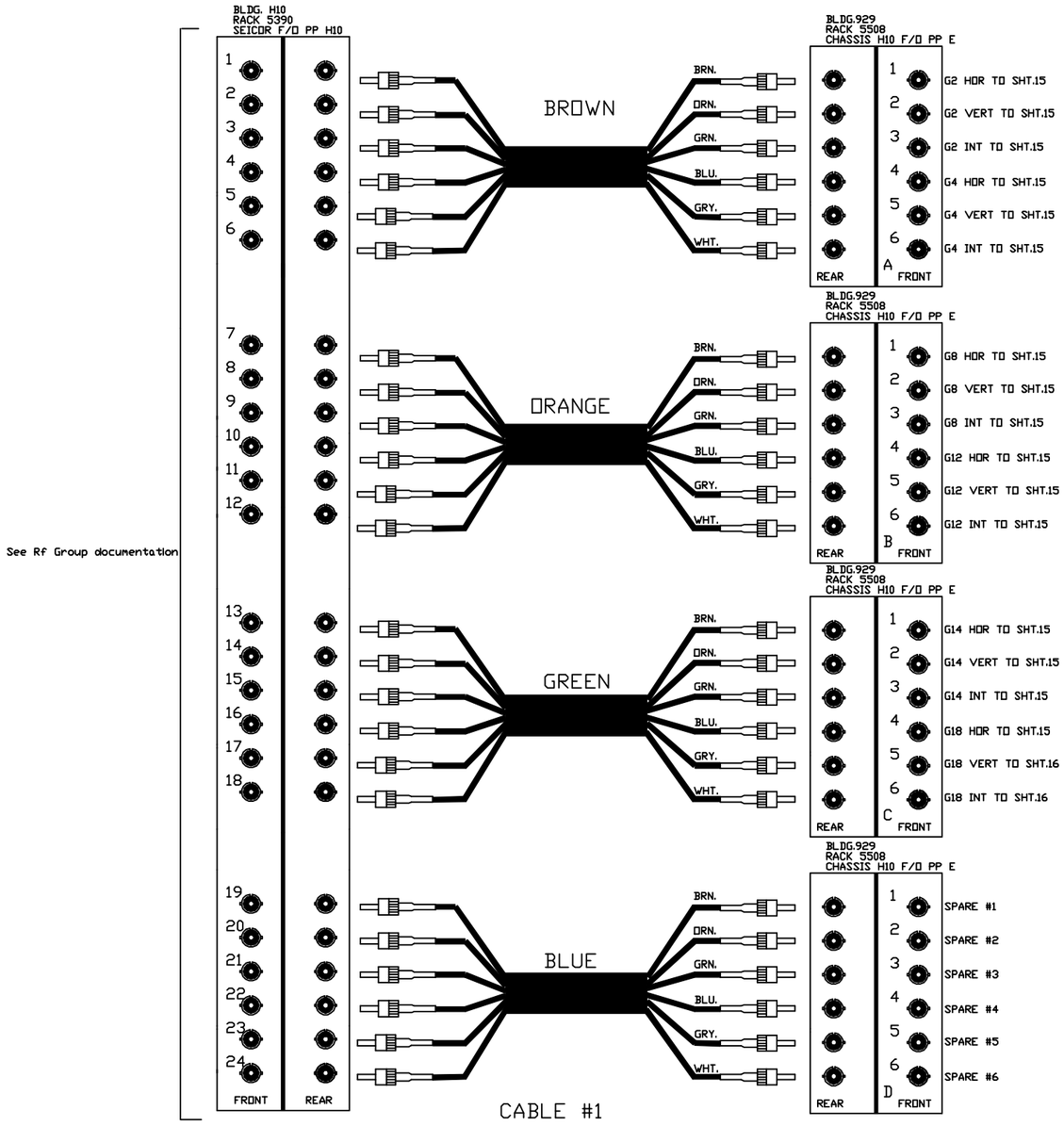

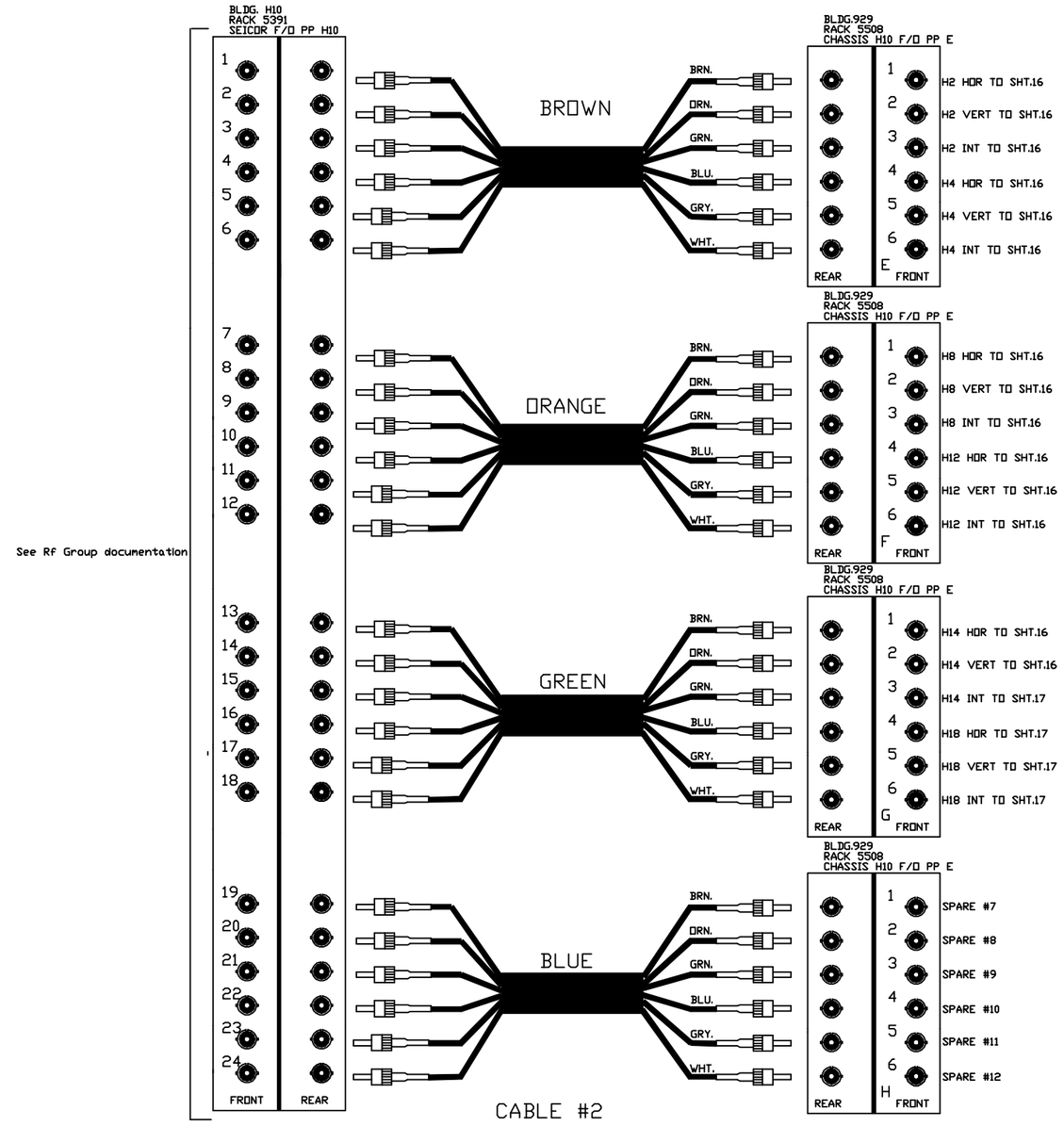

REV.	ZONE	ECN NO.	DATE	BY	CKR	APP.

-3	-2	-1	REF DESIGNATOR	ITEM NO.	DESCRIPTION	MAT'L. DWG NO./BNL NO.
QTY REQD						

INTERPRET IN GENERAL ACCORDANCE WITH ASME Y14.24M-1989

UNLESS OTHERWISE SPECIFIED DIMENSIONS ARE IN INCHES

DECIMAL TOLERANCES
.X ±.030
.XX ±.015
.XXX ±.005
ANGULAR TOLERANCE
± .5°

NA FINISH

BREAK SHARP EDGES
MAX. XX MIN. XX

OUTSTANDING ECN

Q.A. CATEGORY A-3		DATE
DRAWN BY	CZACHOR	02/04/98
CHECKED BY		
DESIGN APPROVAL		
ENGINEER APPROVAL		
SUPVR. APPROVAL		

NEXT ASSEMBLY

BROOKHAVEN NATIONAL LABORATORY
ASSOCIATED UNIVERSITIES, INC.
UPTON, N.Y. 11973

BEAM POSITION MONITOR
FIBER OPTIC SIGNAL
CABLING

SIZE D | DRAWING NUMBER D09-E-XXXX | REV. A

MATERIAL: — N/A | SCALE: N/A | WEIGHT: N/A | SHEET 24 OF X

*AUTOCAD

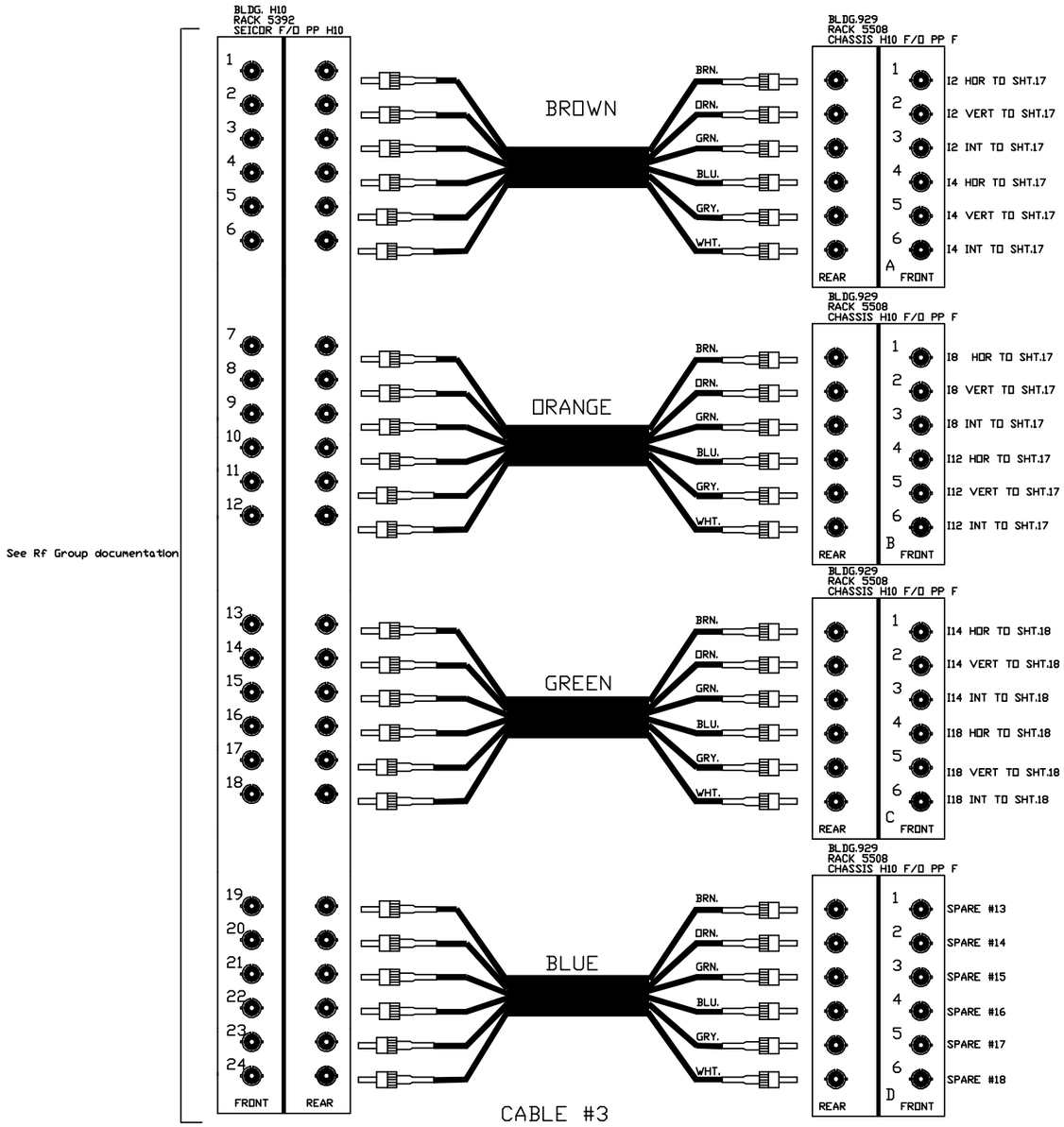

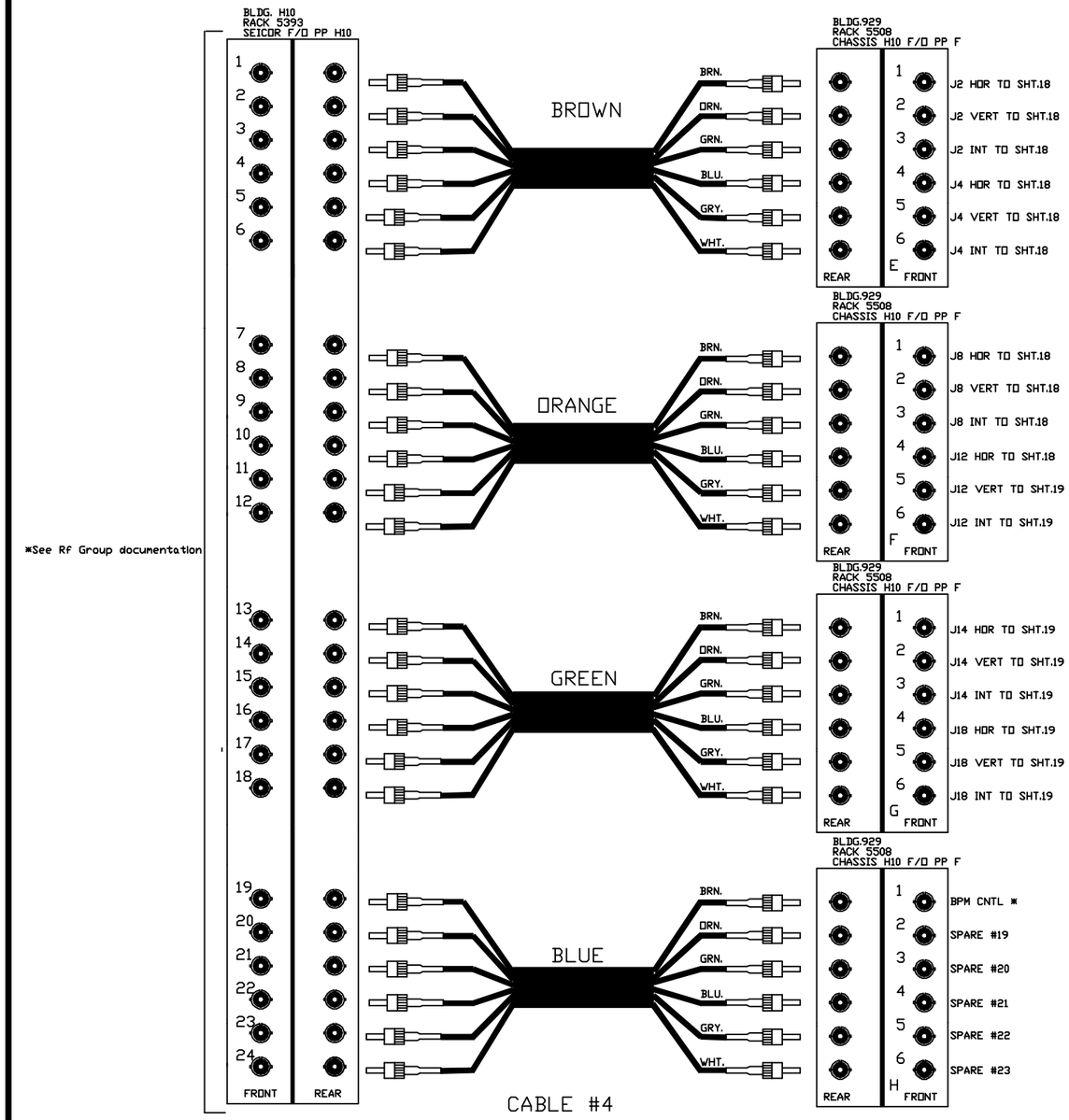

REV.	ZONE	ECN NO.	DATE	BY	CKR	APP.

-3	-2	-1	REF DESIGNATOR	ITEM NO.	DESCRIPTION	MAT'L DWG NO./BNL NO.
QTY REQD						

INTERPRET IN GENERAL ACCORDANCE WITH ASME Y14.24M-1989

UNLESS OTHERWISE SPECIFIED DIMENSIONS ARE IN INCHES

DECIMAL TOLERANCES
.X ±.030
.XX ±.015
.XXX ±.005
ANGULAR TOLERANCE ± .5°

OUTSTANDING ECN

NA FINISH

BREAK SHARP EDGES MAX. XX MIN. XX

Q.A. CATEGORY A-3		DATE
DRAWN BY	CZACHOR	02/04/98
CHECKED BY		
DESIGN APPROVAL		
ENGINEER APPROVAL		
SUPVR. APPROVAL		

NEXT ASSEMBLY

BROOKHAVEN NATIONAL LABORATORY
ASSOCIATED UNIVERSITIES, INC.
UPTON, N.Y. 11973

BEAM POSITION MONITOR
FIBER OPTIC SIGNAL
CABLING

SIZE D | DRAWING NUMBER D09-E-XXXX | REV. A

MATERIAL: — N/A | SCALE: N/A | WEIGHT: N/A | SHEET 25 OF X

*AUTOCAD

REV.	ZONE	ECN NO.	DATE	BY	CKR	APP.

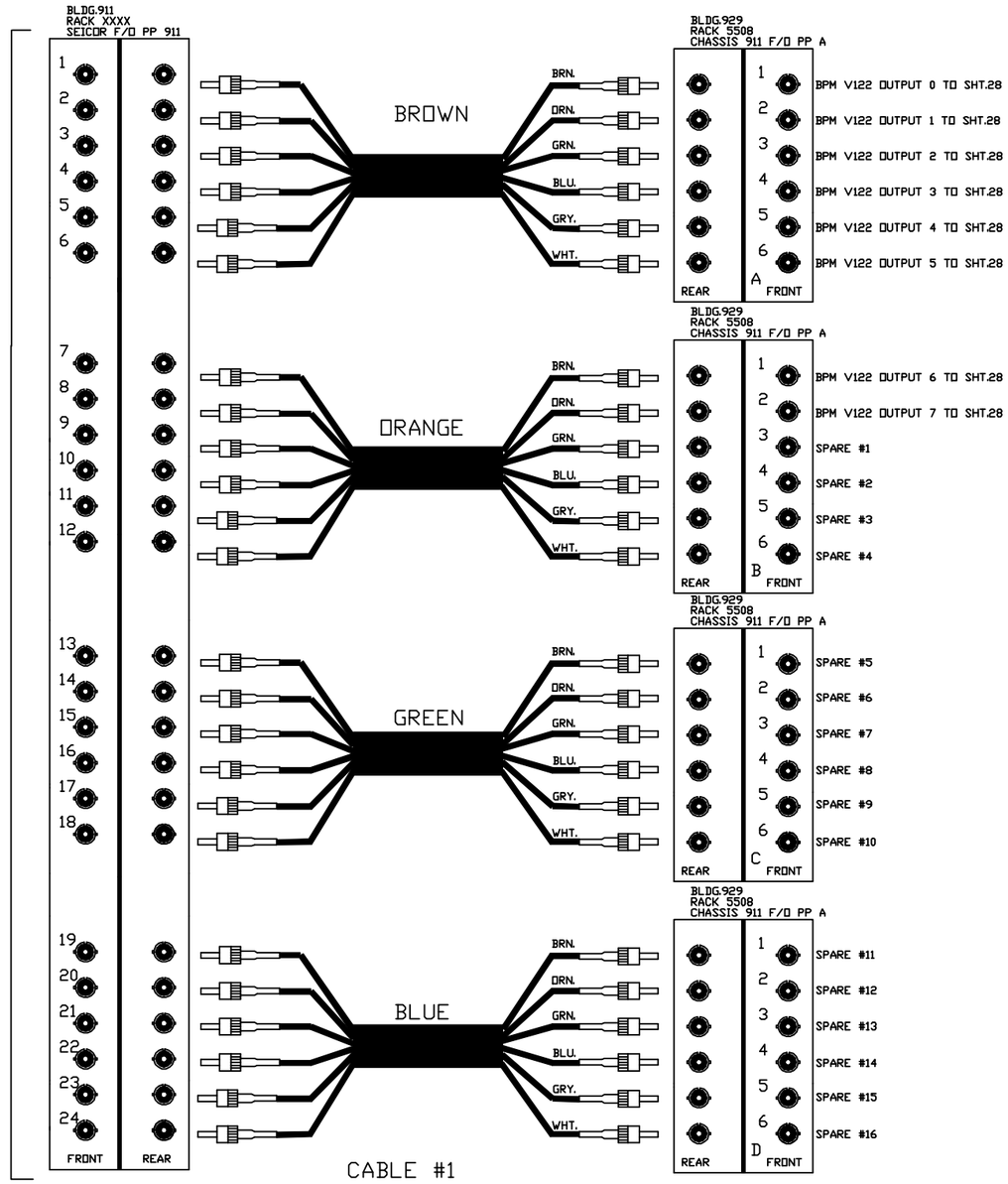

TO BE DEFINED

-3	-2	-1	QTY REQD	REF DESIGNATOR	ITEM NO.	DESCRIPTION	MAT'L. DWG NO.,BNL NO.

INTERPRET IN GENERAL ACCORDANCE WITH ASME Y14.24M-1989

UNLESS OTHERWISE SPECIFIED DIMENSIONS ARE IN INCHES

DECIMAL TOLERANCES
.X ±.030
.XX ±.015
.XXX ±.005
ANGULAR TOLERANCE ± .5°

OUTSTANDING ECN

NA FINISH

BREAK SHARP EDGES MAX. XX MIN. XX

Q.A. CATEGORY A-3		DATE	
DRAWN BY	CZACHOR	06/24/97	
CHECKED BY			
DESIGN APPROVAL			
ENGINEER APPROVAL			
SUPVR. APPROVAL			

NEXT ASSEMBLY

BROOKHAVEN NATIONAL LABORATORY
ASSOCIATED UNIVERSITIES, INC.
UPTON, N.Y. 11973

BEAM POSITION MONITOR
FIBER OPTIC SIGNAL
CABLING

SIZE D | DRAWING NUMBER D09-E-XXXX | REV. A

MATERIAL: — N/A | SCALE: N/A | WEIGHT: N/A | SHEET 26 OF X

*AUTOCAD

REV.	ZONE	ECN NO.	DATE	BY	CKR	APP.

BIT3
BLDG #: 929
RACK #: 5509
CHASSIS ID: CST.929.VME
SLOT #: 21
AXX BASE ADDRESS: PRI

BIT3
BLDG #: 929
RACK #: 5508
CHASSIS ID: CST.929.VME.EXT
SLOT #: 1
AXX BASE ADDRESS: SEC

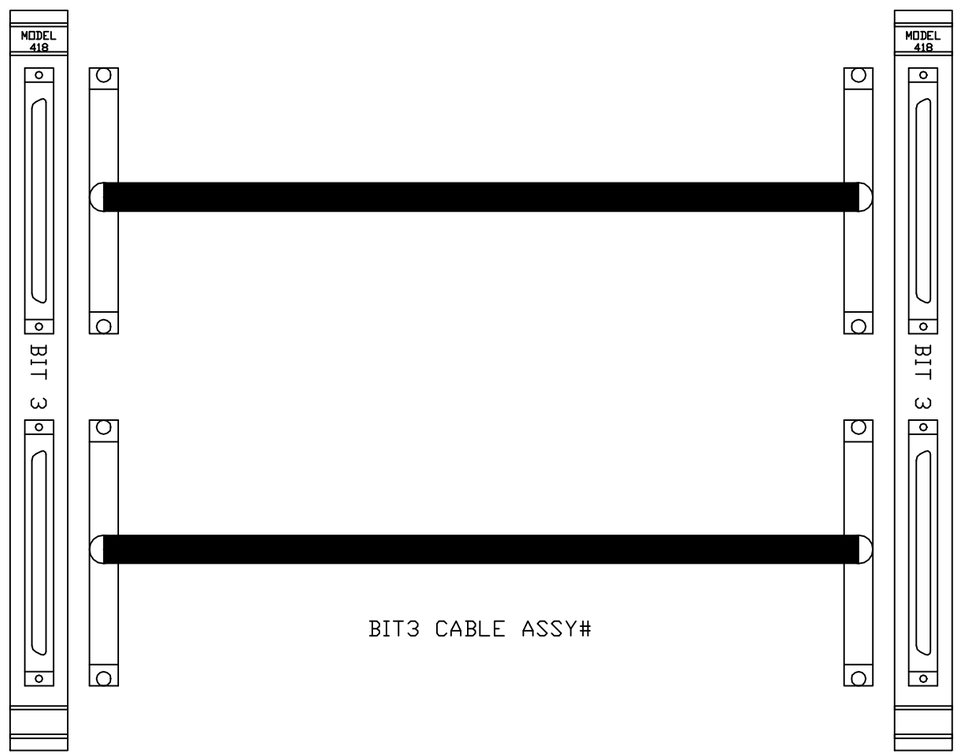

-3	-2	-1	REF DESIGNATOR	ITEM NO.	DESCRIPTION	MAT'L DWG NO.,BNL NO.
QTY REQD						

INTERPRET IN GENERAL ACCORDANCE WITH ASME Y14.24M-1989

UNLESS OTHERWISE SPECIFIED DIMENSIONS ARE IN INCHES

DECIMAL TOLERANCES
.X ±.030
.XX ±.015
.XXX ±.005
ANGULAR TOLERANCE
± .5°

NA FINISH

BREAK SHARP EDGES
MAX. XX MIN. XX

OUTSTANDING ECN

Q.A. CATEGORY A-3

		DATE
DRAWN BY	CZACHOR	02/05/98
CHECKED BY		
DESIGN APPROVAL		
ENGINEER APPROVAL		
SUPVR. APPROVAL		

NEXT ASSEMBLY

BROOKHAVEN NATIONAL LABORATORY
ASSOCIATED UNIVERSITIES, INC.
UPTON, N.Y. 11973

BEAM POSITION MONITOR

BIT3 BOARDS SIGNAL

CABLING

SIZE D

D09-E-XXXX
DRAWING NUMBER

REV. A

MATERIAL: — N/A SCALE: N/A WEIGHT: N/A SHEET 27 OF X

*AUTOCAD

REV.	ZONE	ECN NO.	DATE	BY	CKR	APP.

V122 FO MUX DRIVER

BLDG #: 929
RACK #: 5508
CHASSIS ID: CST.929.VME.EXT
SLOT #: 21
AXX BASE ADDRESS: N.A.

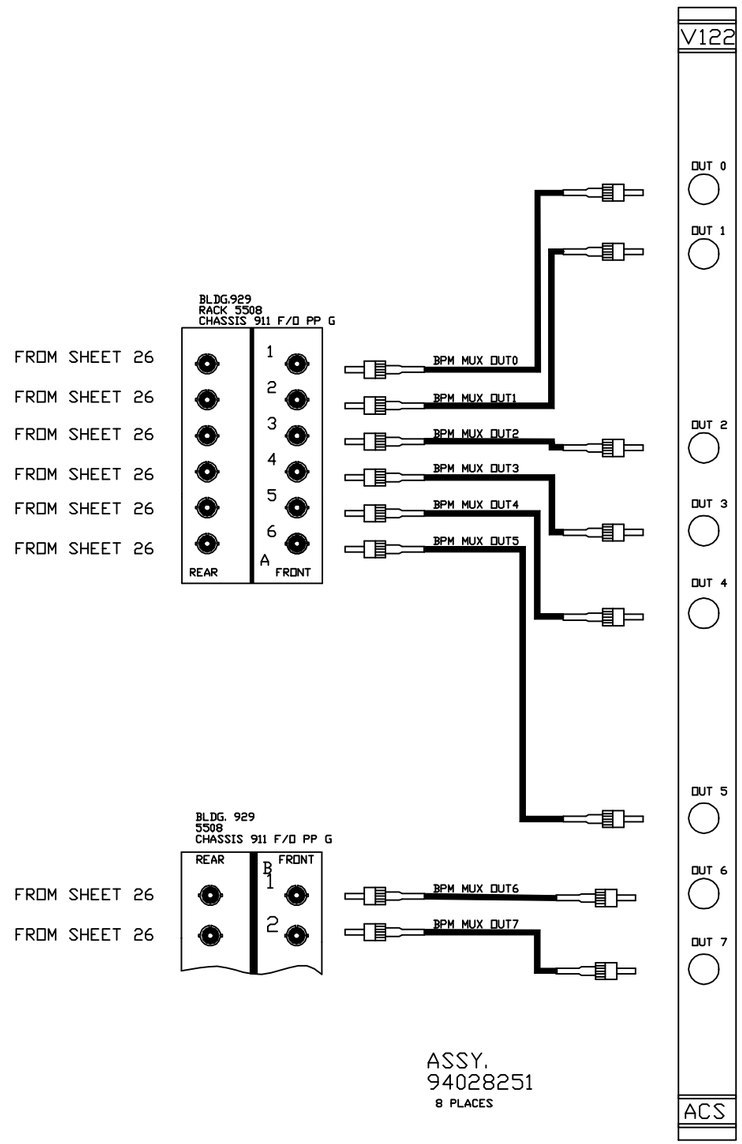

-3	-2	-1	REF DESIGNATOR	ITEM NO.	DESCRIPTION	MAT'L DWG NO./BNL NO.
QTY REQD						

INTERPRET IN GENERAL ACCORDANCE WITH ASME Y14.24M–1989

UNLESS OTHERWISE SPECIFIED DIMENSIONS ARE IN INCHES

DECIMAL TOLERANCES
.X ±.030
.XX ±.015
.XXX ±.005
ANGULAR TOLERANCE
± .5°

OUTSTANDING ECN: NA

FINISH: ✓

BREAK SHARP EDGES
MAX. XX MIN. XX

Q.A. CATEGORY A–3		DATE
DRAWN BY	CZACHOR	02/06/98
CHECKED BY		
DESIGN APPROVAL		
ENGINEER APPROVAL		
SUPVR. APPROVAL		

NEXT ASSEMBLY

BROOKHAVEN NATIONAL LABORATORY
ASSOCIATED UNIVERSITIES, INC.
UPTON, N.Y. 11973

BEAM POSITION MONITOR

FO–PP; V122

CABLING

SIZE: D

DRAWING NUMBER: D09–E–XXXX

REV.: A

MATERIAL: — N/A | SCALE: N/A | WEIGHT: N/A | SHEET 28 OF X

1 *AUTOCAD

REV.	ZONE	ECN NO.	DATE	BY	CKR	APP.

VMI2170A DIGITAL OUTPUT BD.

BLDG #: 929
RACK #: 5509
CHASSIS ID: CST.929.VME
SLOT #: 19
A16 BASE ADDRESS: 00000004

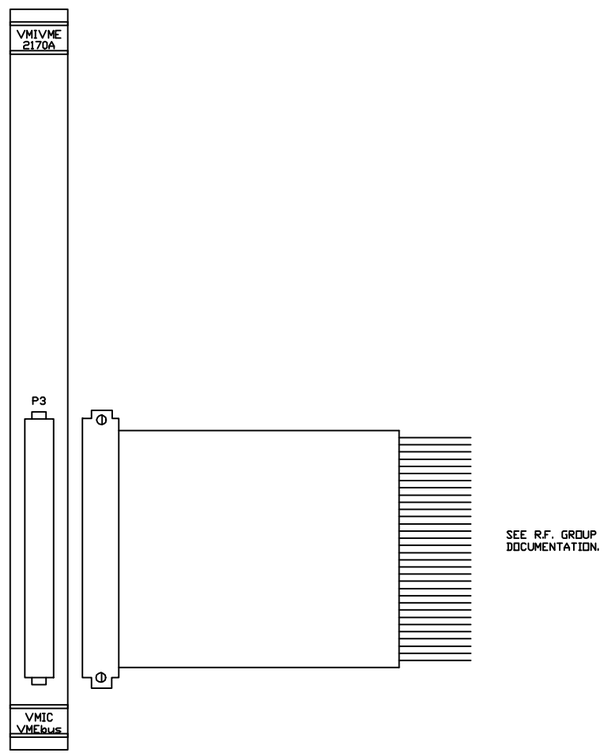

VMI1160A DIGITAL INPUT BD.

BLDG #: 929
RACK #: 5509
CHASSIS ID: CST.929.VME
SLOT #: 18
A16 BASE ADDRESS: 00000020

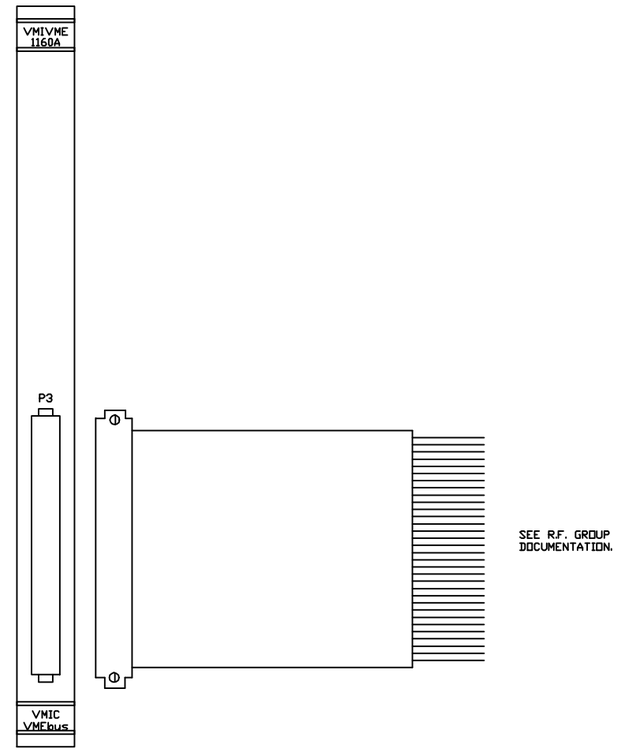

-3	-2	-1	REF DESIGNATOR	ITEM NO.	DESCRIPTION	MAT'L DWG NO./BNL NO.
QTY REQD						

INTERPRET IN GENERAL ACCORDANCE WITH ASME Y14.24M-1989

UNLESS OTHERWISE SPECIFIED DIMENSIONS ARE IN INCHES

DECIMAL TOLERANCES
.X ±.030
.XX ±.015
.XXX ±.005
ANGULAR TOLERANCE
± .5°

OUTSTANDING ECN

NA FINISH

BREAK SHARP EDGES
MAX. XX MIN. XX

Q.A. CATEGORY A-3		DATE
DRAWN BY	CZACHOR	02/05/98
CHECKED BY		
DESIGN APPROVAL		
ENGINEER APPROVAL		
SUPVR. APPROVAL		

NEXT ASSEMBLY

BROOKHAVEN NATIONAL LABORATORY
ASSOCIATED UNIVERSITIES, INC.
UPTON, N.Y. 11973

BEAM POSITION MONITOR

VMI 2170A & VMI1160A

CABLING

SIZE D | DRAWING NUMBER D09-E-XXXX | REV. A

MATERIAL: — N/A | SCALE: N/A | WEIGHT: N/A | SHEET 29 OF X

*AUTOCAD