REV.	ZONE	ECN NO.	DATE	BY	CKR	APP.

Phil Pape, Controls Division 3/18/2003 1:42 PM 958_rack.dwg

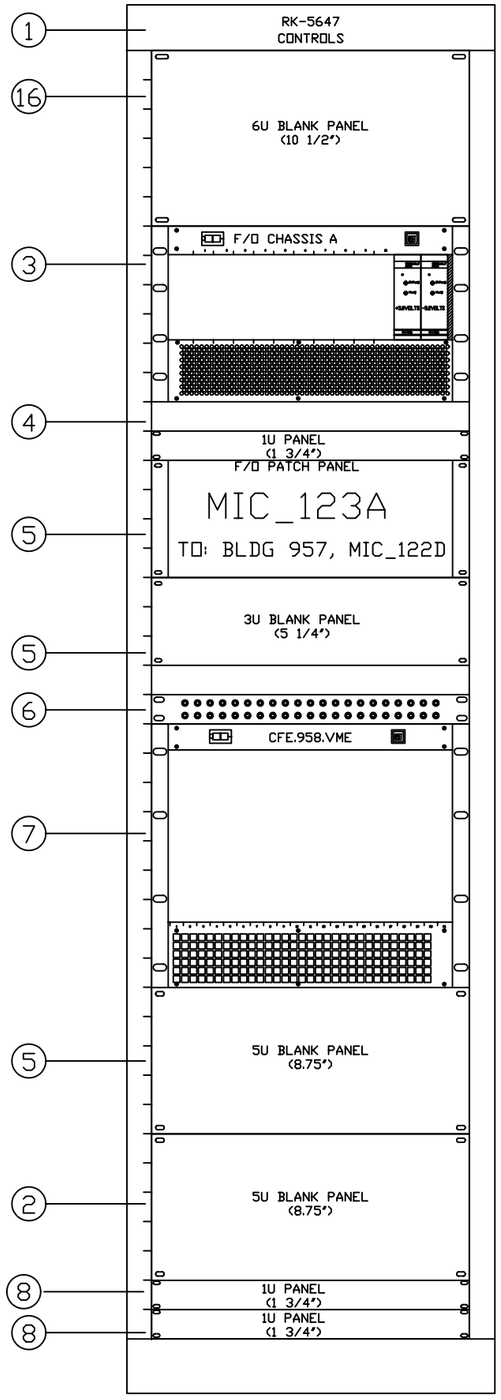

FRONT VIEW

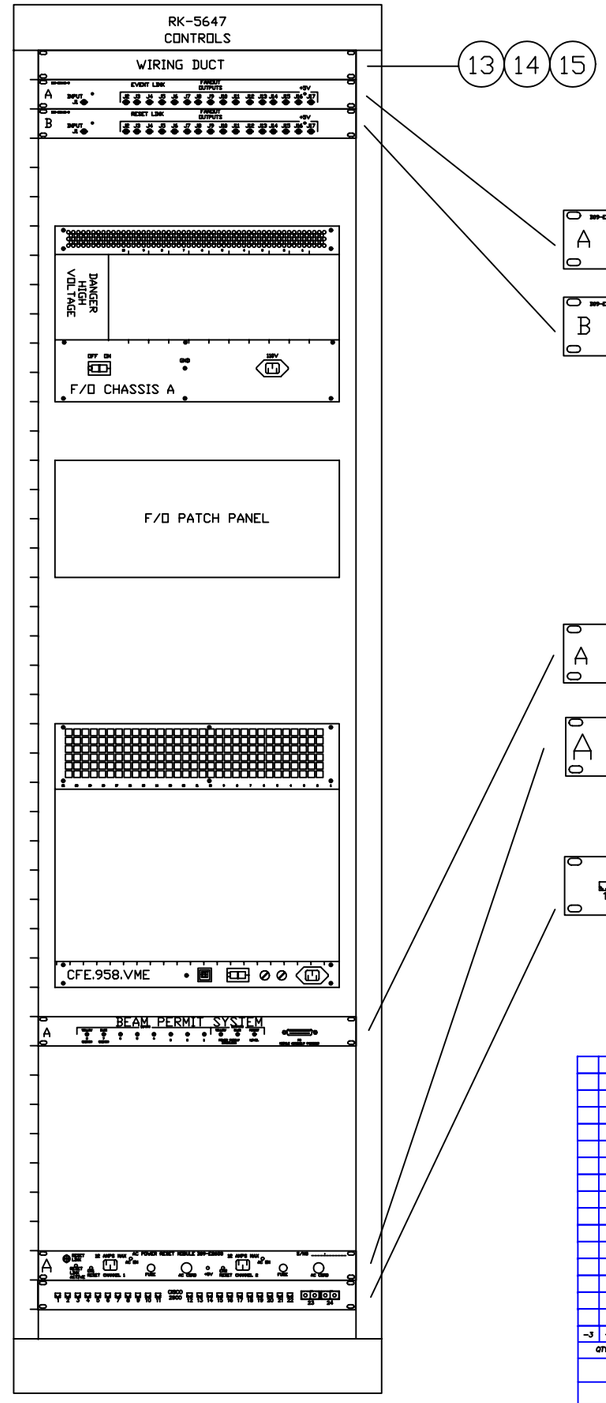

REAR VIEW

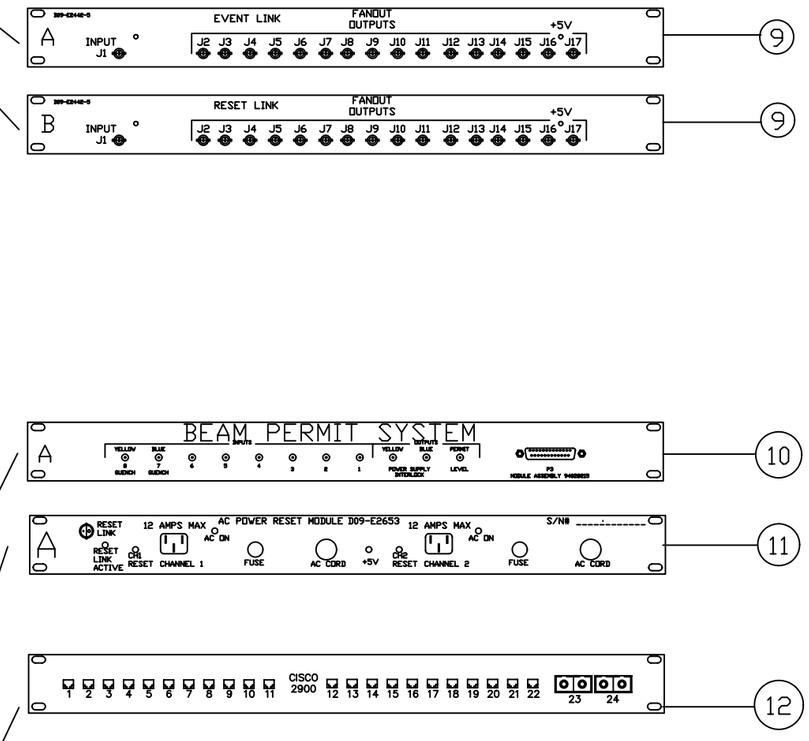

QTY REQD -3	QTY REQD -2	QTY REQD -1	REF DESIGNATOR	ITEM NO.	DESCRIPTION	MAT'L DWG NO.,BNL NO.
		1	N/A	16	6U X 19" BLANK PANEL (PREMIER METAL ARP- XXX-553)	X
		2	N/A	15	WIRING DUCT SNAP CLIPS 1.5"W (PANDUIT S1.5-C)	
		1	N/A	14	WIRING DUCT COVER 1.5"W (PANDUIT C1.5LG6)	
		1	N/A	13	WIRING DUCT 1.5"W x 4"D (PANDUIT E1.5X4LG6)	
		1	A	12	ETHERNET NETWORK HARDWARE	
		1	A	11	AC POWER RESET ASSEMBLY	D09-E2653
		1	A	10	BEAM PERMIT SYSTEM INTERFACE PANEL	94028215
		2	A,B	9	FANOUT ASSEMBLY	D09-E2442
		2	N/A	8	1U x 19" BLANK PANEL (PREMIER METAL ARP-119-553)	
		1	N/A	7	VME CHASSIS CST.958.VME	
		2	N/A	6	GROMMET PANEL	
		2	N/A	5	3U x 19" BLANK PANEL (PREMIER METAL ARP-519-553)	
		1	N/A	4	FDNS FIBER OPTIC TERMINATION CHASSIS	
		1	N/A	3	3U FIBER OPTIC CHASSIS	94028396
		2	N/A	2	4U x 19" BLANK PANEL (PREMIER METAL ARP-719-553)	
		1		1	19" RACK, 77H RACK SPACE	

INTERPRET IN GENERAL ACCORDANCE WITH ASME Y14.24M-1989

UNLESS OTHERWISE SPECIFIED DIMENSIONS ARE IN INCHES

DECIMAL TOLERANCES
.X ±.030
.XX ±.015
.XXX ±.005
ANGULAR TOLERANCE
± .5°

OUTSTANDING ECN

NA FINISH

BREAK SHARP EDGES
MAX. XX MIN. XX

Q.A. CATEGORY A-3

DATE 03/18/03

DRAWN BY PAPE

CHECKED BY

DESIGN APPROVAL

ENGINEER APPROVAL

SUPVR. APPROVAL

NEXT ASSEMBLY

BROOKHAVEN NATIONAL LABORATORY
UPTON, N.Y. 11973

CA- CONTROLS

BAF BLDG 958

RACK 5647 ASSEMBLY

SIZE D

DRAWING NUMBER

REV. A

MATERIAL: ——

SCALE: FULL

WEIGHT: –

SHEET 1 OF 1

*AUTOCAD