RHIC Accelerator Controls Section
Bldg. 1006B Wiring Diagrams
BNL Drawing Number 94028549

Brookhaven National Laboratory, Upton, New York 11973

Created By: Ed Koropsak
Last Updated by Koropsak 2/4/05

Power Distribution
- ✍ Rack R06B01 (Sheet 1)
- ✍ Rack R06B02, Rack R06B03 (Sheet 2)
- ✍ Rack R06B04 (Sheet 3)

SPARES
- ✍ MADC Channels (Sheet 47)
- ✍ MADC Rack Panel Layout (Sheet 47.1)
- ✍ I/O Channels (Sheet 48)

Serial Links
- ✍ Event Link (Sheet 4,5)
- ✍ Real Time Data Link (RTDL) (Sheet 6,7)
- ✍ Reset Link (Sheet 8)
- ✍ Beam Sync Yellow Link (Sheet 9)
- ✍ Beam Sync Blue Link (Sheet 10)

VME Chassis CFE-6B-PS1 modules
- ✍ CPU, Memory Board, V108 Utility Module (Sheet 11)
- ✍ V113/V114 MADC System (Sheet 12)
- ✍ V115 WFG A: bi5-tq4, bi5-tq5 (Sheet 13)
- ✍ V115 WFG B: bi5-tq6, bo6-tq4 (Sheet 14)
- ✍ V115 WFG C: bo6-tq5, bo6-tq6 (Sheet 15)
- ✍ V115 WFG D: b6-q89, bo6-qf8 (Sheet 16)
- ✍ V115 WFG E: bi5-qf9, b6-dhx (Sheet 17)
- ✍ V115 WFG F: b6-dh0 (Sheet 18)
- ✍ V115 WFG G: b6-sxf10-ps, bo6-sxd11-ps (Sheet 19)
- ✍ V120 Permit Module (Sheet 51)
- ✍ DX Heater PS MADC Readbacks (Sheet 50)
- ✍ Permit System Interface Panel (Sheet 52)

VME Chassis CFE-6B-VAC modules
- ✍ Front End Computer, V108 Utility Module (Sheet 42)

VME Chassis CFE-6B-PS2 modules
- ✍ CPU, Memory Board, V108 Utility Module (Sheet 28)
- ✍ V113/V114 MADC System (Sheet 29)
- ✍ V115 WFG A: yo5-tq4, yo5-tq5 (Sheet 30)
- ✍ V115 WFG B: yo5-tq6, yi6-tq4 (Sheet 31)
- ✍ V115 WFG C: yi6-tq5, yi6-tq6 (Sheet 32)
- ✍ V115 WFG D: y6-q89, yi6-qf9 (Sheet 33)
- ✍ V115 WFG E: yo5-qf8, y6-dh0 (Sheet 34)
- ✍ V115 WFG F: Spare (Sheet 35)
- ✍ V102 Delay Module A - Event Link (Sheet 49)
- ✍ SIS3803 Scaler Module (Sheet 46)
- ✍ V124 Beam Sync Trigger Module BLUE (Sheet 36)

VME Chassis CFE-6B-PS3 modules
- ✍ CPU, Memory Board, V108 Utility Module and Temp Mon. (Sheet 60)
- ✍ V113/V114 MADC System A & B (Sheet 61)
- ✍ V115 WFG A: bi5-qf1, bo6-qd1 (Sheet 62)
- ✍ V115 WFG B: bi5-qd2, bi5-qf3 (Sheet 63)
- ✍ V115 WFG C: bo6-qf2, bo6-qd3 (Sheet 64)
- ✍ V115 WFG D: b6-q6, b6-q7 (Sheet 65)
- ✍ V115 WFG H: yo5-qd1, yi6-qf1 (Sheet 66)
- ✍ V115 WFG I: yo5-qf2, yo5-qd3 (Sheet 67)
- ✍ V115 WFG J: yi6-qd2, yi6-qf3 (Sheet 68)
- ✍ V115 WFG K: y6-q6, y6-q7 (Sheet 69)
- ✍ Vacuum MADC I/O Panels G & H (Sheet 77)
- ✍ 208 Voltage Monitor MADC Ch (Sheet 78)

NOTE: Sheets 23-27, 40, 41, 44, 53-59, 70-76 are Blank

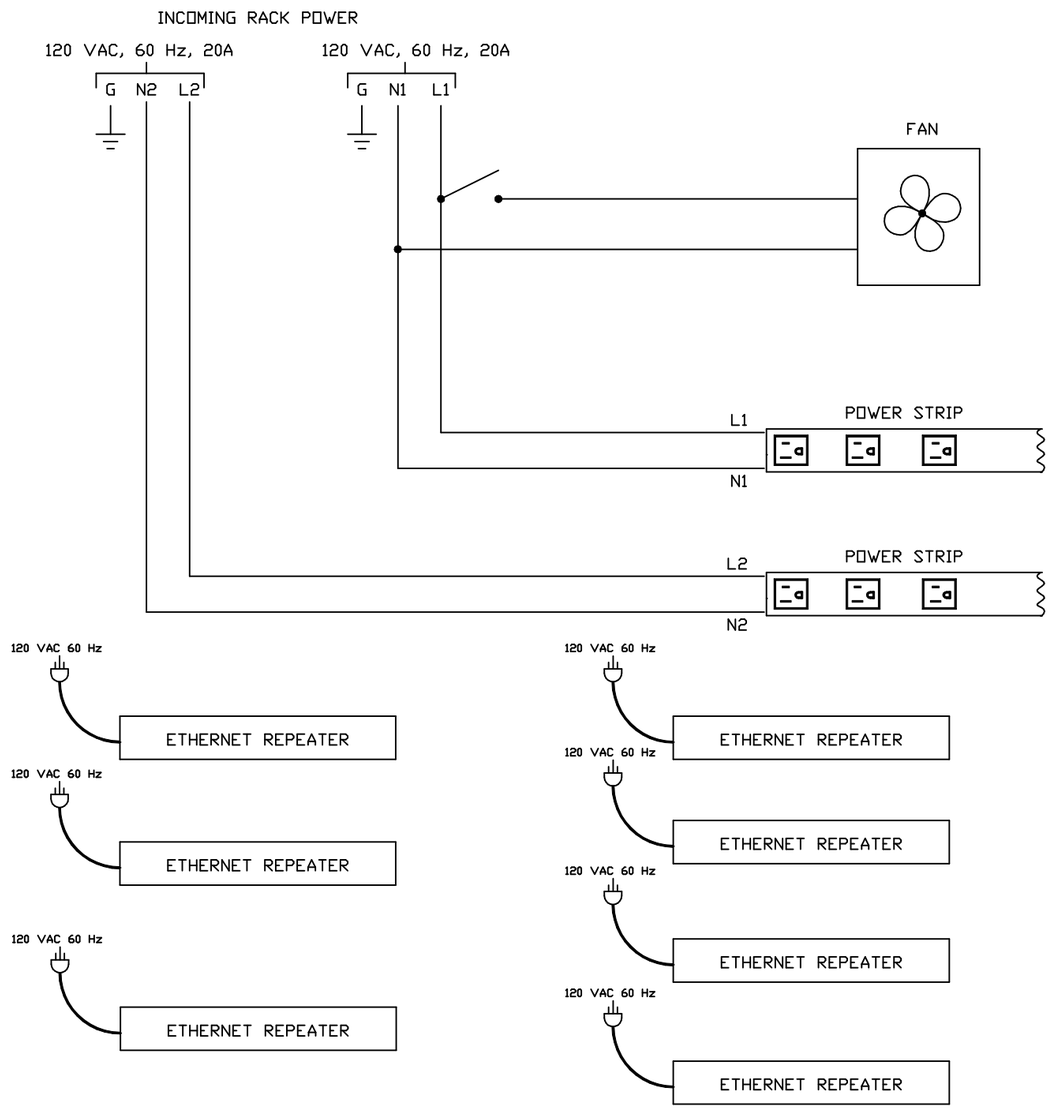

NOTE: ALL 120 VAC, 60 Hz POWER CORDS
PLUG INTO POWER STRIP OUTLETS

RACK R06B01

REV.	ZONE	ECN NO.	DATE	BY	CKR	APP.

-3	-7	-1	REF DESIGNATOR	ITEM NO.	DESCRIPTION	MAT'L. DWG NO./BNL NO.
		X		11	CABLE ASSY, POWER SUPPLY TO MADC A/D I/O PANEL (3 CABLES/PS)	
		X		10	CABLE ASSY, LOW RES PS IF MODULE TO POWER SUPPLY	
		X		9	PERMIT SYSTEM INTERFACE CABLE, T120 TO PERMIT SYSTEM INTERFACE PANEL	D09-E2225-2
		X		8	SERIAL LINK TWINAX CABLE, LENGTH AS REQUIRED	94028176
		X		7	SERIAL LINK TWINAX CABLE, 1 FT	94028176
		X		6	DUPLEX MULTIMODE FIBER OPTIC CABLE, T115 TO LOW RES PS INTERFACE MODULE	94028249
		X		5	SINGLE MODE FIBER OPTIC CABLE	94028251
		X		4	MADC A/D I/O CABLE	94028216
		X		3	TRANSITION MODULE P2 RIBBON CABLE, V115, V120	94028159
		X		2	MADC V113 TO V114 P2 INTERFACE RIBBON CABLE	94028218
		X		1	NETWORK CABLE TO FRONT END COMPUTER	

QTY REQD

INTERPRET IN GENERAL ACCORDANCE WITH ASME Y14.24M-1989

UNLESS OTHERWISE SPECIFIED DIMENSIONS ARE IN INCHES
DECIMAL TOLERANCES
.X ±.030
.XX ±.015
.XXX ±.005
ANGULAR TOLERANCE
± .5°

OUTSTANDING ECN

NA FINISH

BREAK SHARP EDGES
MAX. XX MIN. XX

Q.A. CATEGORY A-3		DATE	BROOKHAVEN NATIONAL LABORATORY
DRAWN BY	Ed Koropsak	1/22/98	UPTON, N.Y. 11973
CHECKED BY			RHIC CONTROLS WIRING DIAGRAM
DESIGN APPROVAL			SERVICE BLDG. RACK R06B01
ENGINEER APPROVAL	R. MICHNOFF	1/22/98	POWER DISTRIBUTION
SUPVR. APPROVAL			
NEXT ASSEMBLY			SIZE D — DRAWING NUMBER 94028549 — REV. A
			MATERIAL: ——— SCALE: NA WEIGHT: – SHEET 1 OF 52

*AUTOCAD

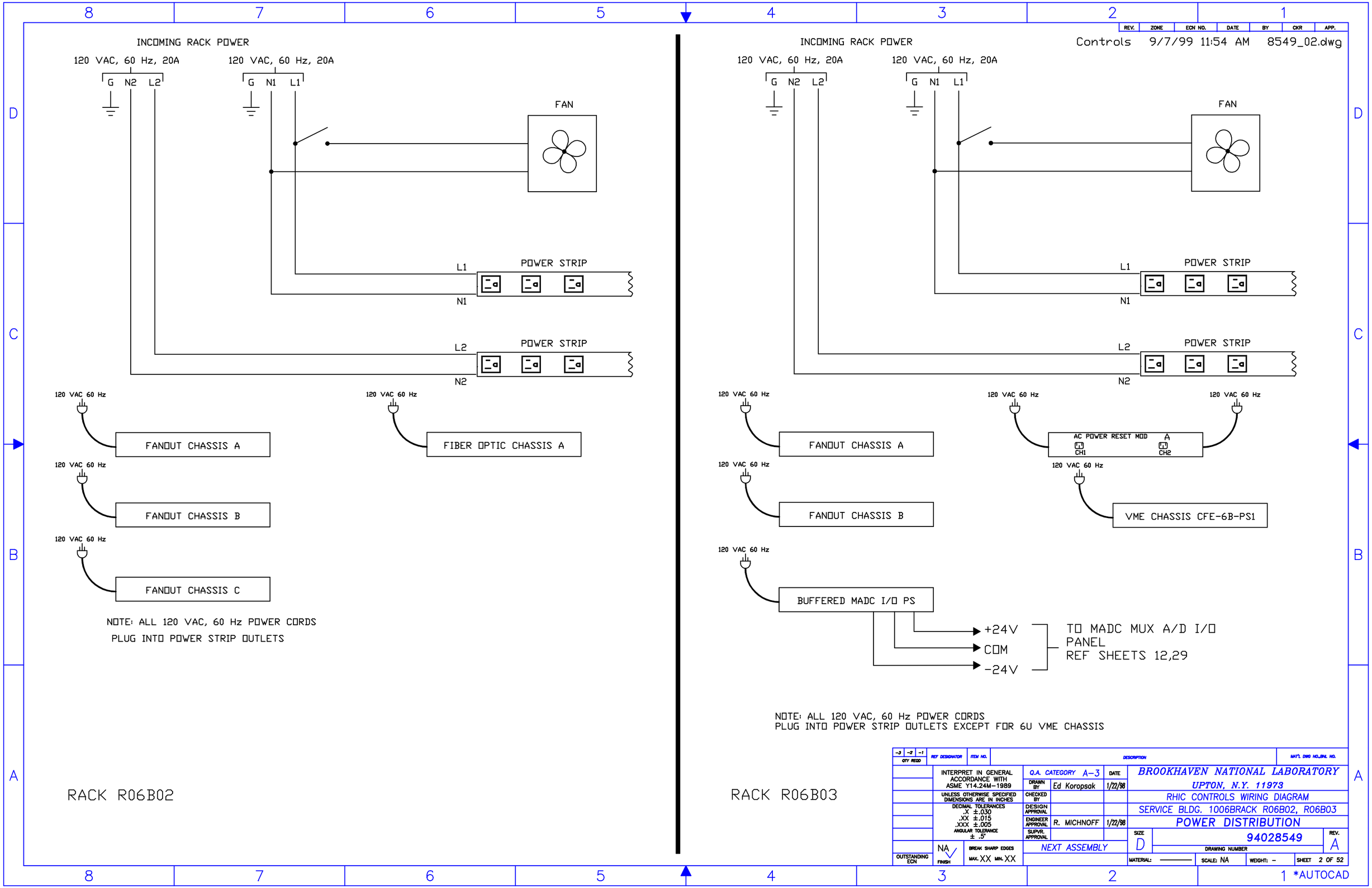

INCOMING RACK POWER
120 VAC, 60 Hz, 20A
G N2 L2
120 VAC, 60 Hz, 20A
G N1 L1
FAN
L1
POWER STRIP
N1
L2
POWER STRIP
N2
120 VAC 60 Hz
FANOUT CHASSIS A
120 VAC 60 Hz
FIBER OPTIC CHASSIS A
120 VAC 60 Hz
FANOUT CHASSIS B
120 VAC 60 Hz
FANOUT CHASSIS C
NOTE: ALL 120 VAC, 60 Hz POWER CORDS
PLUG INTO POWER STRIP OUTLETS
RACK R06B02
INCOMING RACK POWER
120 VAC, 60 Hz, 20A
G N2 L2
120 VAC, 60 Hz, 20A
G N1 L1
FAN
L1
POWER STRIP
N1
L2
POWER STRIP
N2
120 VAC 60 Hz
FANOUT CHASSIS A
120 VAC 60 Hz
AC POWER RESET MOD A
CH1
CH2
120 VAC 60 Hz
120 VAC 60 Hz
FANOUT CHASSIS B
120 VAC 60 Hz
VME CHASSIS CFE-6B-PS1
120 VAC 60 Hz
BUFFERED MADC I/O PS
+24V
COM
-24V
TO MADC MUX A/D I/O
PANEL
REF SHEETS 12,29
NOTE: ALL 120 VAC, 60 Hz POWER CORDS
PLUG INTO POWER STRIP OUTLETS EXCEPT FOR 6U VME CHASSIS
RACK R06B03
REV. ZONE ECN NO. DATE BY CKR APP.
Controls 9/7/99 11:54 AM 8549_02.dwg
-3 -2 -1 QTY REQD
REF DESIGNATOR
ITEM NO.
DESCRIPTION
MAT'L DWG NO.,BNL NO.
INTERPRET IN GENERAL ACCORDANCE WITH ASME Y14.24M-1989
UNLESS OTHERWISE SPECIFIED DIMENSIONS ARE IN INCHES
DECIMAL TOLERANCES .X ±.030 .XX ±.015 .XXX ±.005
ANGULAR TOLERANCE ± .5°
OUTSTANDING ECN
NA
FINISH
BREAK SHARP EDGES
MAX. XX MIN. XX
Q.A. CATEGORY A-3
DATE
DRAWN BY Ed Koropsak 1/22/98
CHECKED BY
DESIGN APPROVAL
ENGINEER APPROVAL R. MICHNOFF 1/22/98
SUPVR. APPROVAL
NEXT ASSEMBLY
BROOKHAVEN NATIONAL LABORATORY
UPTON, N.Y. 11973
RHIC CONTROLS WIRING DIAGRAM
SERVICE BLDG. 1006BRACK R06B02, R06B03
POWER DISTRIBUTION
SIZE D
94028549
REV. A
DRAWING NUMBER
MATERIAL:
SCALE: NA
WEIGHT: -
SHEET 2 OF 52
*AUTOCAD

REV.	ZONE	ECN NO.	DATE	BY	CKR	APP.

Bill Venegas, BNL 6/16/2003 10:35 AM 8549_03.dwg

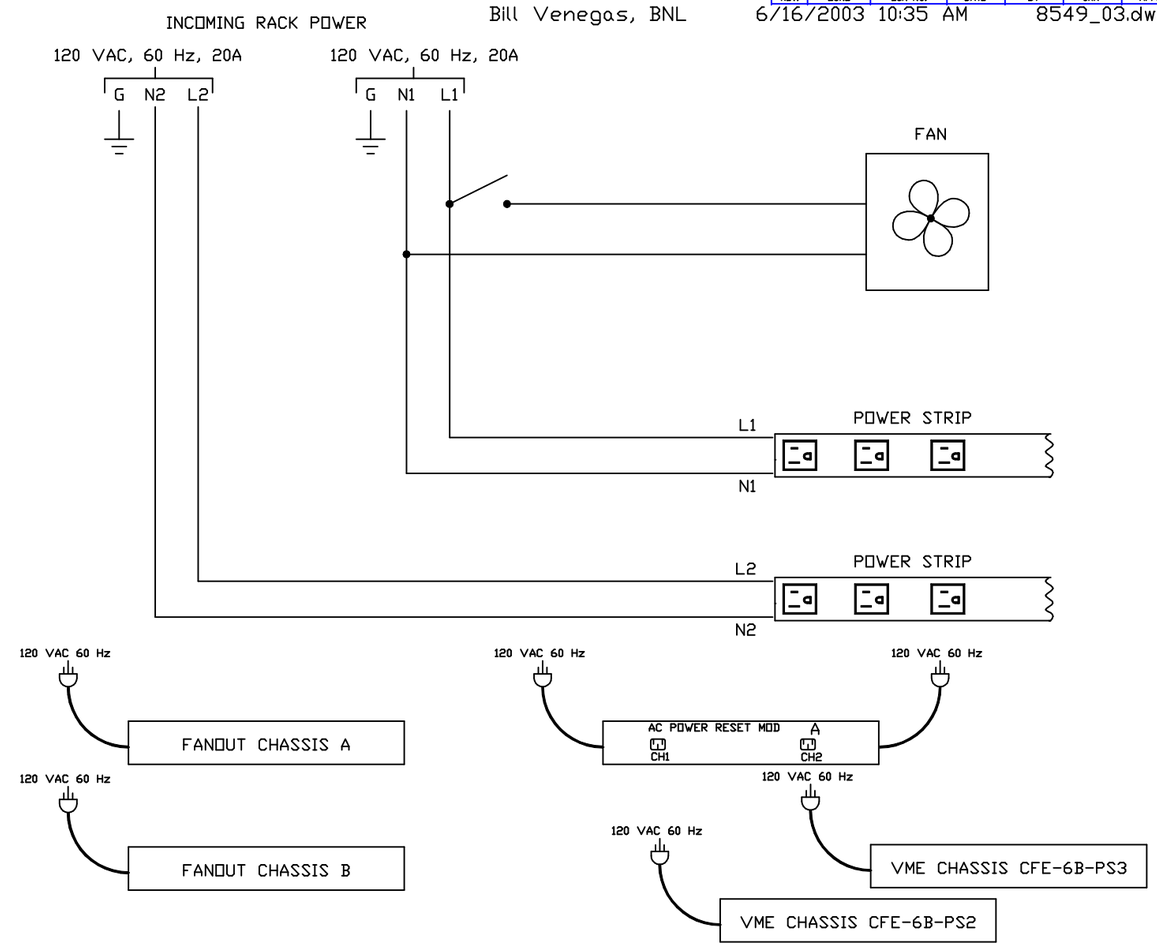

NOTE: ALL 120 VAC, 60 Hz POWER CORDS
PLUG INTO POWER STRIP OUTLETS EXCEPT FOR 6U VME CHASSIS

RACK R06B04

-3	-2	-1	REF DESIGNATOR	ITEM NO.	DESCRIPTION	MAT'L. DWG NO./BNL NO.
QTY REQD						

INTERPRET IN GENERAL ACCORDANCE WITH ASME Y14.24M-1989

UNLESS OTHERWISE SPECIFIED DIMENSIONS ARE IN INCHES

DECIMAL TOLERANCES
.X ±.030
.XX ±.015
.XXX ±.005
ANGULAR TOLERANCE
± .5°

NA FINISH — BREAK SHARP EDGES — MAX. XX MIN. XX

OUTSTANDING ECN

Q.A. CATEGORY A-3		DATE
DRAWN BY	Venegas	6/16/03
CHECKED BY		
DESIGN APPROVAL		
ENGINEER APPROVAL		
SUPVR. APPROVAL		

NEXT ASSEMBLY

BROOKHAVEN NATIONAL LABORATORY
UPTON, N.Y. 11973

RHIC CONTROLS WIRING DIAGRAM
SERVICE BLDG. 1006B RACK R06B04
POWER DISTRIBUTION

SIZE D — DRAWING NUMBER 94028549 — REV. A

MATERIAL: ——— SCALE: NA WEIGHT: – SHEET 3

*AUTOCAD

REV.	ZONE	ECN NO.	DATE	BY	CKR	APP.

Bill Venegas, BNL 6/16/2003 10:38 AM 8549_04.dwg

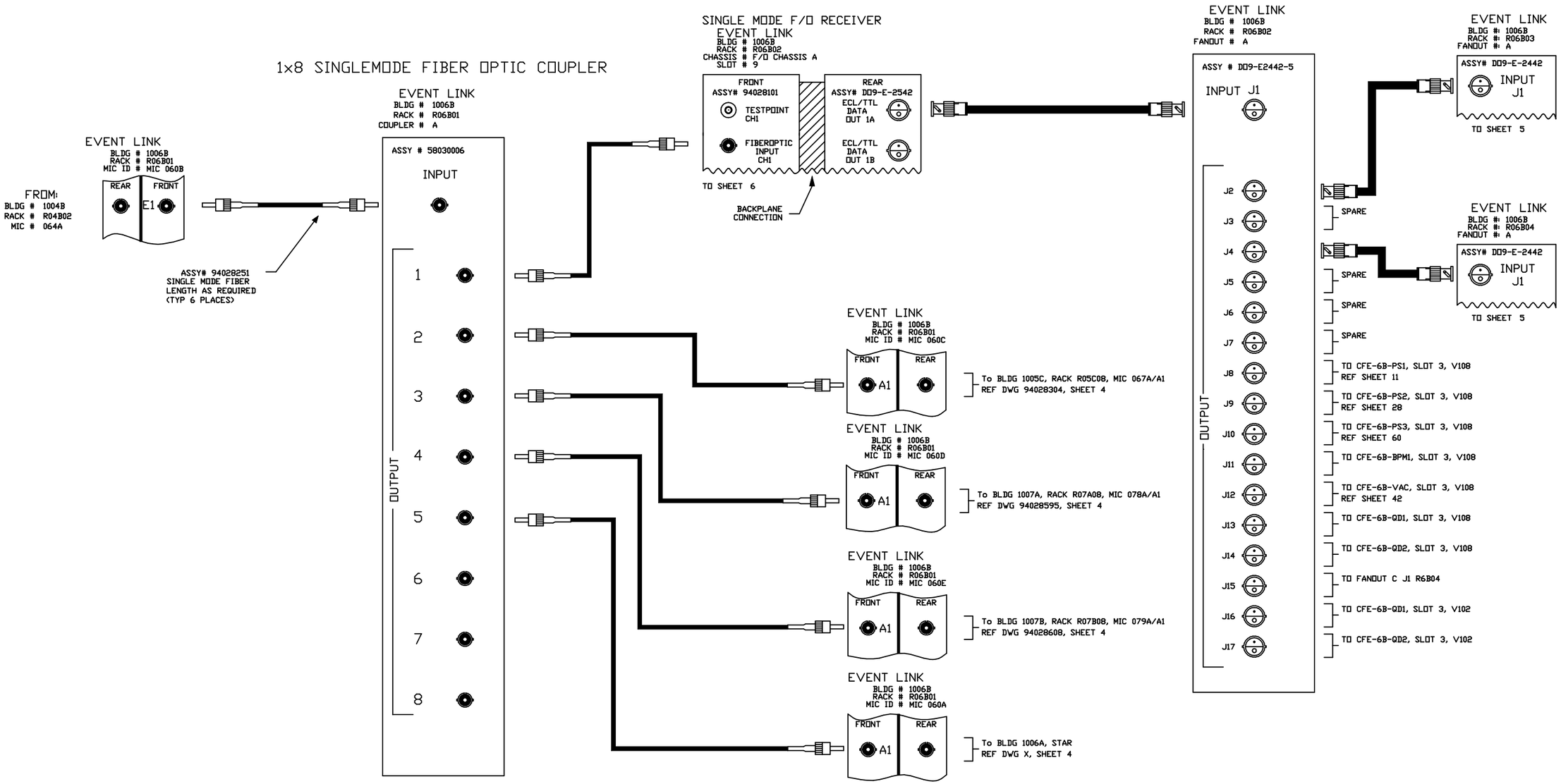

-3	-2	-1	REF DESIGNATOR	ITEM NO.	DESCRIPTION	MAT'L. DWG NO.,SPEC. NO.
QTY REQD						

INTERPRET IN GENERAL ACCORDANCE WITH ASME Y14.24M-1989

UNLESS OTHERWISE SPECIFIED DIMENSIONS ARE IN INCHES

DECIMAL TOLERANCES
.X ±.030
.XX ±.015
.XXX ±.005
ANGULAR TOLERANCE ± .5°

NA FINISH — BREAK SHARP EDGES MAX. XX MIN. XX

OUTSTANDING ECN

Q.A. CATEGORY A-3		DATE
DRAWN BY	Venegas	6/16/03
CHECKED BY		
DESIGN APPROVAL		
ENGINEER APPROVAL		
SUPVR. APPROVAL		

NEXT ASSEMBLY

BROOKHAVEN NATIONAL LABORATORY
UPTON, N.Y. 11973

RHIC CONTROLS WIRING DIAGRAM
SERVICE BLDG 1006B
EVENT LINK

SIZE D — DRAWING NUMBER 94028549 — REV. A

MATERIAL: ——— SCALE: NA WEIGHT: – SHEET 4

*AUTOCAD

REV.	ZONE	ECN NO.	DATE	BY	CKR	APP.

Bill Venegas, BNL 6/18/2003 10:33 AM 8549_05.dwg

EVENT LINK FANOUT MODULE

BLDG # 1006B
RACK # R06B03
FANOUT # A

FROM SHEET 4
ASSY # DD9-E2442-5

OUTPUT

J2	TO CFE-6B-PS1, SLOT 21, V120 REF SHEET 51
J3	SPARE
J4	TO CFE-6B-PS1, SLOT 4, V113 REF SHEET 12
J5	SPARE
J6	SPARE
J7	SPARE
J8	SPARE
J9	SPARE
J10	SPARE
J11	To CFE-6B-PS1, SLOT 12, T215 REF SHEET 17
J12	To CFE-6B-PS1, SLOT 11, T215 REF SHEET 16
J13	To CFE-6B-PS1, SLOT 10, T215 REF SHEET 15
J14	To CFE-6B-PS1, SLOT 9, T215 REF SHEET 14
J15	To CFE-6B-PS1, SLOT 8, T215 REF SHEET 13
J16	SPARE
J17	SPARE

EVENT LINK FANOUT MODULE

BLDG # 1006B
RACK # R06B04
FANOUT # A

FROM SHEET 4
ASSY # DD9-E2442-5

OUTPUT

J2	To CFE-6B-PS2, SLOT 20, V102 REF SHEET 49
J3	To CFE-6B-PS2, SLOT 4, V113 REF SHEET 29
J4	SPARE
J5	SPARE
J6	SPARE
J7	SPARE
J8	SPARE
J9	SPARE
J10	SPARE
J11	TO CFE-6B-PS2, SLOT 12, T215 REF SHEET 34
J12	TO CFE-6B-PS2, SLOT 11, T215 REF SHEET 33
J13	TO CFE-6B-PS2, SLOT 10, T215 REF SHEET 32
J14	TO CFE-6B-PS2, SLOT 9, T215 REF SHEET 31
J15	TO CFE-6B-PS2, SLOT 8, T215 REF SHEET 30
J16	SPARE
J17	SPARE

EVENT LINK FANOUT MODULE

BLDG # 1006B
RACK # R06B04
FANOUT # C

FROM SHEET 4
ASSY # DD9-E2442-5

OUTPUT

J2	TO CFE-6B-PS3, SLOT 18, T215 REF SHEET 69
J3	TO CFE-6B-PS3, SLOT 13, V113 REF SHEET 61
J4	TO CFE-6B-PS3, SLOT 17, T215 REF SHEET 68
J5	TO CFE-6B-PS3, SLOT 16, T215 REF SHEET 67
J6	TO CFE-6B-PS3, SLOT 15, T215 REF SHEET 66
J7	TO REF SHEET
J8	TO REF SHEET
J9	TO REF SHEET
J10	TO REF SHEET
J11	TO REF SHEET
J12	TO CFE-6B-PS3, SLOT 9, T215 REF SHEET 65
J13	TO CFE-6B-PS3, SLOT 8, T215 REF SHEET 64
J14	TO CFE-6B-PS3, SLOT 7, T215 REF SHEET 63
J15	TO CFE-6B-PS3, SLOT 6, T215 REF SHEET 62
J16	SPARE
J17	SPARE

-3	-2	-1	REF DESIGNATOR	ITEM NO.	DESCRIPTION	MAT'L. DWG NO./BNL NO.
QTY REQD						

INTERPRET IN GENERAL ACCORDANCE WITH ASME Y14.24M-1989
UNLESS OTHERWISE SPECIFIED DIMENSIONS ARE IN INCHES
DECIMAL TOLERANCES
.X ±.030
.XX ±.015
.XXX ±.005
ANGULAR TOLERANCE ± .5°

OUTSTANDING ECN
NA FINISH
BREAK SHARP EDGES MAX. XX MIN. XX

Q.A. CATEGORY A-3 DATE
DRAWN BY Venegas 6/16/03
CHECKED BY
DESIGN APPROVAL
ENGINEER APPROVAL
SUPVR. APPROVAL
NEXT ASSEMBLY

BROOKHAVEN NATIONAL LABORATORY
UPTON, N.Y. 11973
RHIC CONTROLS WIRING DIAGRAM
1006B
EVENT LINK

SIZE D
94028549
DRAWING NUMBER
REV. A

MATERIAL: ——— SCALE: NA WEIGHT: – SHEET 5

*AUTOCAD

REV.	ZONE	ECN NO.	DATE	BY	CKR	APP.

Bill Venegas, BNL 6/16/2003 11:01 AM 8549_06.dwg

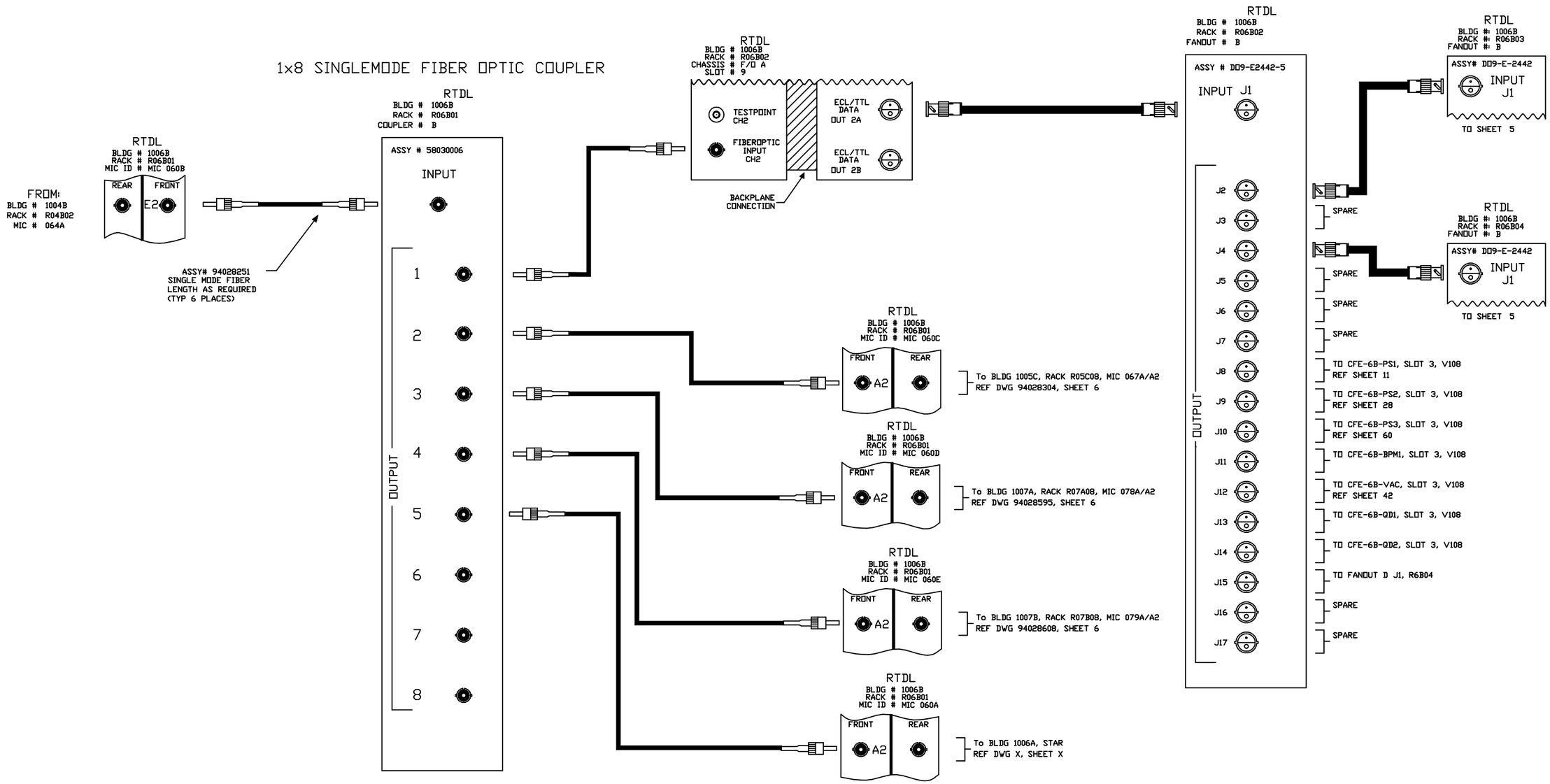

-3	-2	-1	REF DESIGNATOR	ITEM NO.	DESCRIPTION	MAT'L. DWG NO.,SPEC. NO.
QTY REQD						

INTERPRET IN GENERAL ACCORDANCE WITH ASME Y14.24M-1989

UNLESS OTHERWISE SPECIFIED DIMENSIONS ARE IN INCHES

DECIMAL TOLERANCES
.X ±.030
.XX ±.015
.XXX ±.005
ANGULAR TOLERANCE ± .5°

NA FINISH — BREAK SHARP EDGES MAX. XX MIN. XX

OUTSTANDING ECN

Q.A. CATEGORY A-3		DATE
DRAWN BY	Venegas	6/16/03
CHECKED BY		
DESIGN APPROVAL		
ENGINEER APPROVAL		
SUPVR. APPROVAL		

NEXT ASSEMBLY

BROOKHAVEN NATIONAL LABORATORY
UPTON, N.Y. 11973

RHIC CONTROLS WIRING DIAGRAM
SERVICE BLDG 1006B
RTDL

SIZE D — DRAWING NUMBER 94028549 — REV. A

MATERIAL: ——— SCALE: NA WEIGHT: – SHEET 6

*AUTOCAD

Bill Venegas, BNL 6/17/2003 9:45 AM 8549_07.dwg

REV.	ZONE	ECN NO.	DATE	BY	CKR	APP.

RTDL FANOUT MODULE

BLDG # 1006B
RACK # R06B03
FANOUT # B

FROM SHEET 6
ASSY # DD9-E2442-5

OUTPUT

J2	SPARE
J3	SPARE
J4	SPARE
J5	SPARE
J6	SPARE
J7	SPARE
J8	SPARE
J9	SPARE
J10	SPARE
J11	To CFE-6B-PS1, SLOT 12, T115 REF SHEET 17
J12	To CFE-6B-PS1, SLOT 11, T115 REF SHEET 16
J13	To CFE-6B-PS1, SLOT 10, T115 REF SHEET 15
J14	To CFE-6B-PS1, SLOT 9, T115 REF SHEET 14
J15	To CFE-6B-PS1, SLOT 8, T115 REF SHEET 13
J16	SPARE
J17	SPARE

RTDL FANOUT MODULE

BLDG # 1006B
RACK # R06B04
FANOUT # B

FROM SHEET 6
ASSY # DD9-E2442-5

OUTPUT

J2	SPARE
J3	SPARE
J4	SPARE
J5	SPARE
J6	SPARE
J7	SPARE
J8	SPARE
J9	SPARE
J10	SPARE
J11	To CFE-6B-PS2, SLOT 12, T115 REF SHEET 34
J12	To CFE-6B-PS2, SLOT 11, T115 REF SHEET 33
J13	To CFE-6B-PS2, SLOT 10, T115 REF SHEET 32
J14	To CFE-6B-PS2, SLOT 9, T115 REF SHEET 31
J15	To CFE-6B-PS2, SLOT 8, T115 REF SHEET 30
J16	SPARE
J17	SPARE

RTDL FANOUT MODULE

BLDG # 1006B
RACK # R06B04
FANOUT # D

FROM SHEET 6
ASSY # DD9-E2442-5

OUTPUT

J2	TO: CFE-6B-PS3, SLOT 18, T215 REF SHEET 69
J3	SPARE
J4	TO: CFE-6B-PS3, SLOT 17, T215 REF SHEET 68
J5	TO: CFE-6B-PS3, SLOT 16, T215 REF SHEET 67
J6	TO: CFE-6B-PS3, SLOT 15, T215 REF SHEET 66
J7	TO REF SHEET
J8	TO REF SHEET
J9	To REF SHEET
J10	To REF SHEET
J11	To REF SHEET
J12	TO: CFE-6B-PS3, SLOT 9, T215 REF SHEET 65
J13	TO: CFE-6B-PS3, SLOT 8, T215 REF SHEET 64
J14	TO: CFE-6B-PS3, SLOT 7, T215 REF SHEET 63
J15	TO: CFE-6B-PS3, SLOT 6, T215 REF SHEET 62
J16	SPARE
J17	SPARE

-3	-2	-1	REF DESIGNATOR	ITEM NO.	DESCRIPTION	MAT'L. DWG NO./BNL NO.
QTY REQD						

INTERPRET IN GENERAL ACCORDANCE WITH ASME Y14.24M-1989

UNLESS OTHERWISE SPECIFIED DIMENSIONS ARE IN INCHES

DECIMAL TOLERANCES
.X ±.030
.XX ±.015
.XXX ±.005
ANGULAR TOLERANCE ± .5°

OUTSTANDING ECN

NA FINISH

BREAK SHARP EDGES MAX. XX MIN. XX

Q.A. CATEGORY A-3	DATE	
DRAWN BY Venegas	6/16/03	
CHECKED BY		
DESIGN APPROVAL		
ENGINEER APPROVAL		
SUPVR. APPROVAL		
NEXT ASSEMBLY		

BROOKHAVEN NATIONAL LABORATORY
UPTON, N.Y. 11973

RHIC CONTROLS WIRING DIAGRAM
1006B
REAL TIME DATA LINK

SIZE D | DRAWING NUMBER 94028549 | REV. A

MATERIAL: ——— SCALE: NA WEIGHT: – SHEET 7

*AUTOCAD

Bill Venegas, BNL 6/23/2003 2:15 PM 8549_08.dwg

REV.	ZONE	ECN NO.	DATE	BY	CKR	APP.

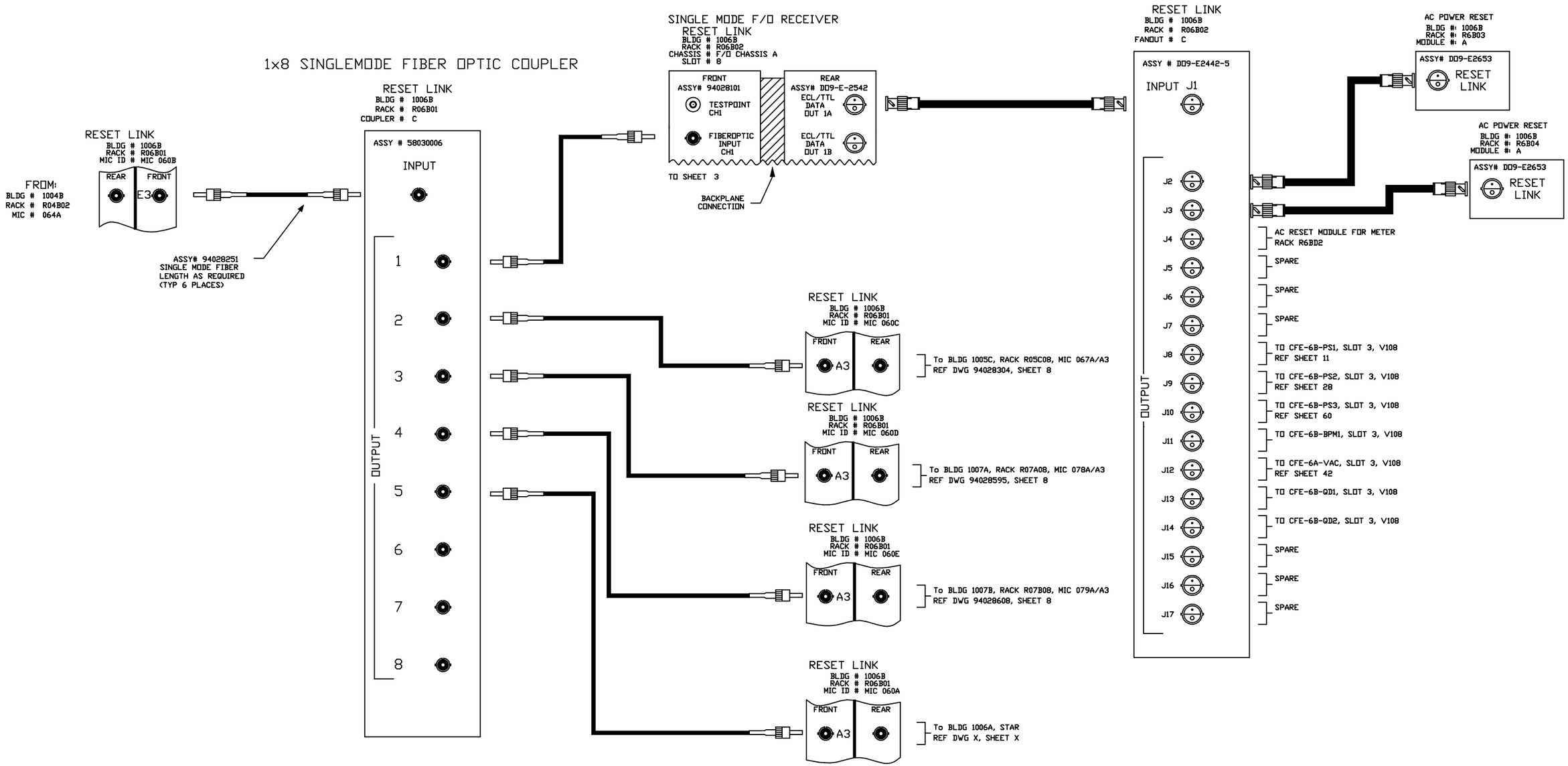

-3	-2	-1	REF DESIGNATOR	ITEM NO.	DESCRIPTION	MAT'L. DWG NO./INL NO.
QTY REQD						

INTERPRET IN GENERAL ACCORDANCE WITH ASME Y14.24M-1989

UNLESS OTHERWISE SPECIFIED DIMENSIONS ARE IN INCHES

DECIMAL TOLERANCES
.X ±.030
.XX ±.015
.XXX ±.005
ANGULAR TOLERANCE
± .5°

FINISH: NA

BREAK SHARP EDGES
MAX. XX MIN. XX

OUTSTANDING ECN

Q.A. CATEGORY A-3

		DATE
DRAWN BY	Venegas	6/16/03
CHECKED BY		
DESIGN APPROVAL		
ENGINEER APPROVAL		
SUPVR. APPROVAL		

NEXT ASSEMBLY

BROOKHAVEN NATIONAL LABORATORY
UPTON, N.Y. 11973

RHIC CONTROLS WIRING DIAGRAM
SERVICE BLDG 1006B
RESET LINK

SIZE D | DRAWING NUMBER 94028549 | REV. A

MATERIAL: ——— SCALE: NA WEIGHT: – SHEET 8

*AUTOCAD

REV.	ZONE	ECN NO.	DATE	BY	CKR	APP.

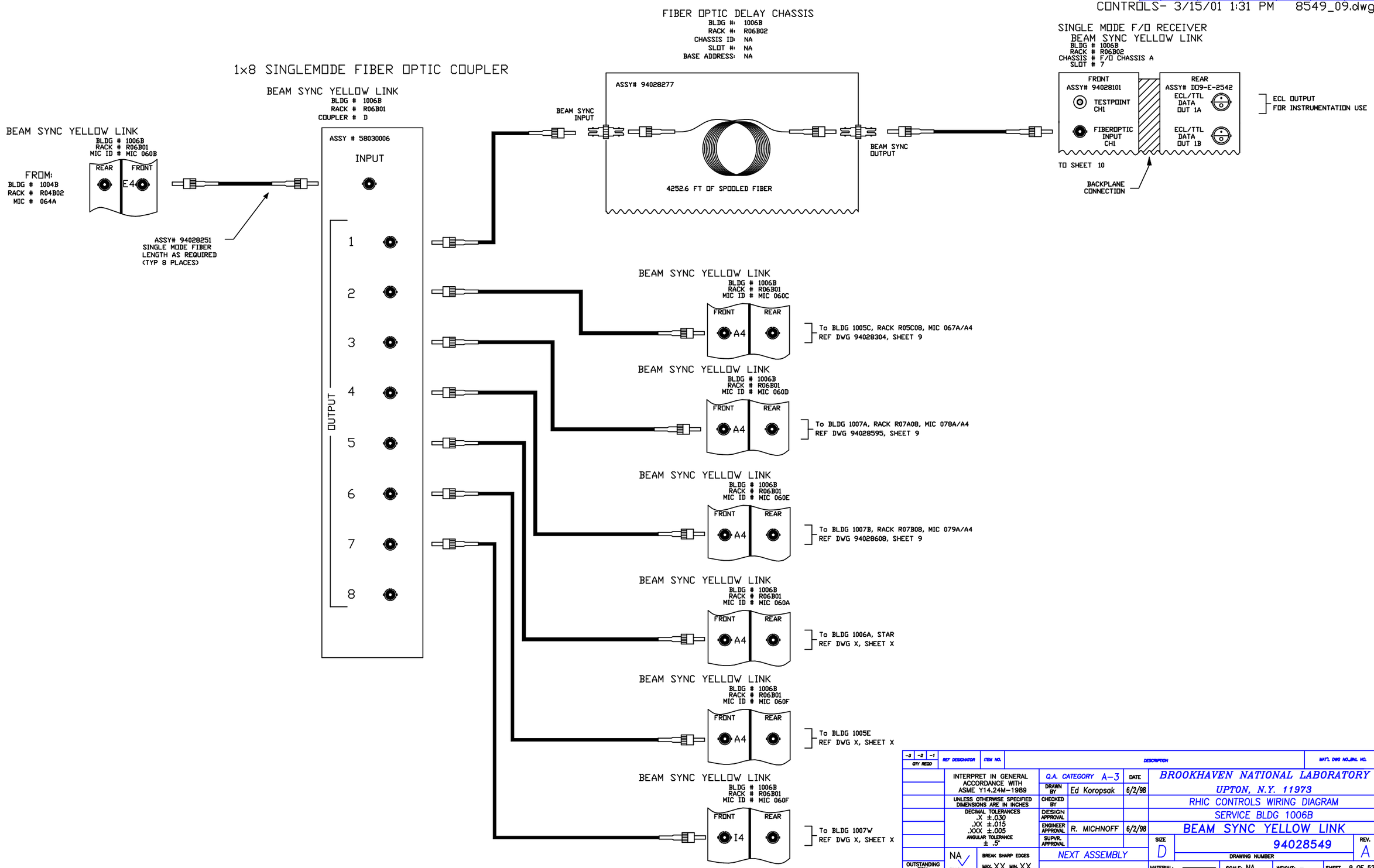

-3	-2	-1	REF DESIGNATOR	ITEM NO.	DESCRIPTION	MAT'L. DWG NO.,SPEC. NO.
		QTY REQD				

INTERPRET IN GENERAL ACCORDANCE WITH ASME Y14.24M-1989	Q.A. CATEGORY A-3	DATE	BROOKHAVEN NATIONAL LABORATORY
	DRAWN BY Ed Koropsak	6/2/98	UPTON, N.Y. 11973
UNLESS OTHERWISE SPECIFIED DIMENSIONS ARE IN INCHES	CHECKED BY		RHIC CONTROLS WIRING DIAGRAM
DECIMAL TOLERANCES .X ±.030 .XX ±.015 .XXX ±.005 ANGULAR TOLERANCE ± .5°	DESIGN APPROVAL		SERVICE BLDG 1006B
	ENGINEER APPROVAL R. MICHNOFF	6/2/98	BEAM SYNC YELLOW LINK
	SUPVR. APPROVAL		SIZE D — 94028549 — REV. A
OUTSTANDING ECN	NA FINISH — BREAK SHARP EDGES MAX. XX MIN. XX	NEXT ASSEMBLY	DRAWING NUMBER
			MATERIAL: ——— SCALE: NA WEIGHT: – SHEET 9 OF 52

*AUTOCAD

CONTROLS- 3/15/01 1:32 PM 8549_10.dwg

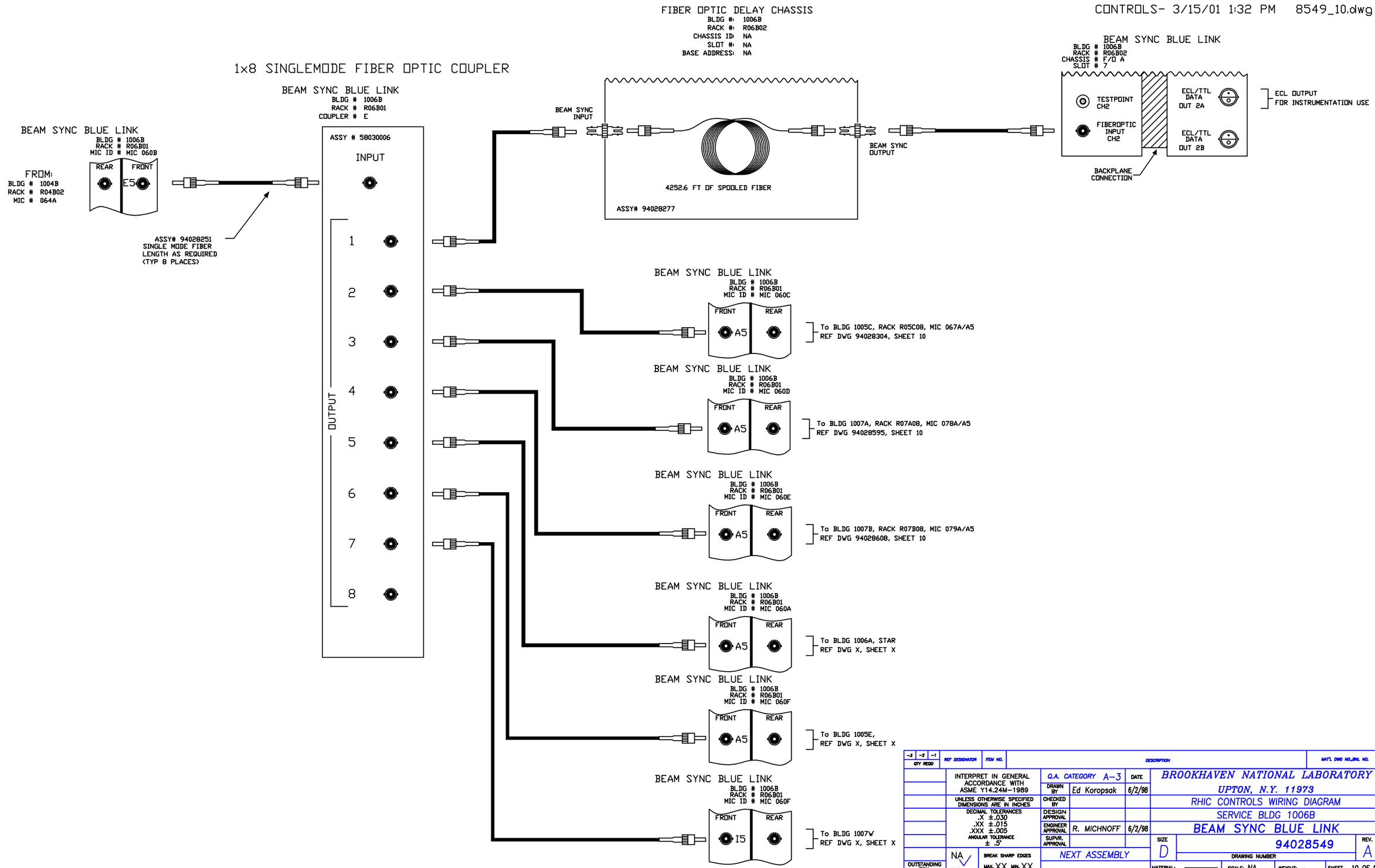

REV.	ZONE	ECN NO.	DATE	BY	CKR	APP.

-3	-2	-1	REF DESIGNATOR	ITEM NO.	DESCRIPTION	MAT'L. DWG NO./BNL NO.
QTY REQD						

INTERPRET IN GENERAL ACCORDANCE WITH ASME Y14.24M-1989

UNLESS OTHERWISE SPECIFIED DIMENSIONS ARE IN INCHES

DECIMAL TOLERANCES
.X ±.030
.XX ±.015
.XXX ±.005
ANGULAR TOLERANCE
± .5°

NA FINISH

BREAK SHARP EDGES
MAX. XX MIN. XX

OUTSTANDING ECN

Q.A. CATEGORY	A-3	DATE
DRAWN BY	Ed Koropsak	6/2/98
CHECKED BY		
DESIGN APPROVAL		
ENGINEER APPROVAL	R. MICHNOFF	6/2/98
SUPVR. APPROVAL		

NEXT ASSEMBLY

BROOKHAVEN NATIONAL LABORATORY
UPTON, N.Y. 11973

RHIC CONTROLS WIRING DIAGRAM

SERVICE BLDG 1006B

BEAM SYNC BLUE LINK

SIZE D

94028549

DRAWING NUMBER

REV. A

MATERIAL: ——— SCALE: NA WEIGHT: – SHEET 10 OF 52

*AUTOCAD

REV.	ZONE	ECN NO.	DATE	BY	CKR	APP.

Bill Venegas, BNL 6/16/2003 11:40 AM 8549_11.dwg

FRONT END COMPUTER

BLDG #: 1006B
RACK #: R06B03
CHASSIS ID: CFE-6B-PS1
SLOT#: 1
FEC NAME: cfe-6b-ps1

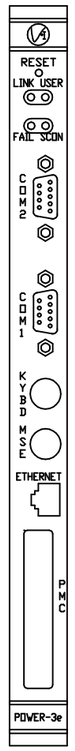

ETHERNET NETWORK

REF. NETWORK DIAGRAM

DEVICE: MEMORY BOARD

BLDG #: 1006B
RACK #: R06B03
CHASSIS ID: CFE-6B-PS1
SLOT #: 2
A24 BASE ADDRESS:

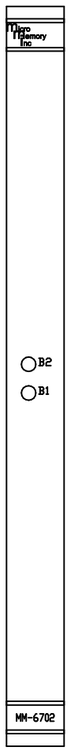

JUMPER LIST
1. REMOVE E1.
2. INSTALL E15.
3. SW3 CLOSE ALL POSITIONS.
4. SW2 CLOSE POSITIONS 7 AND 8.
5. SW1 CLOSE POSITIONS 2-8.
6. INSTALL E14 AND E25 TO ENABLE BATTERIES

DEVICE: V108 UTILITY MODULE

BLDG #: 1006B
RACK #: R06B03
CHASSIS ID: CFE-6B-PS1
SLOT #: 3
A24 BASE ADDRESS: 004000

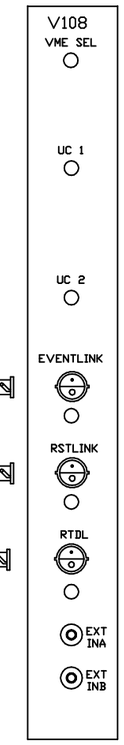

ASSY# 94028094

EVENT LINK
BLDG #: 1006B
RACK #: R06B02
FANOUT #: A

OUTPUT J8

RESET LINK
BLDG #: 1006B
RACK #: R06B02
FANOUT #: C

OUTPUT J8

REAL TIME DATA LINK
BLDG #: 1006B
RACK #: R06B02
FANOUT #: B

OUTPUT J8

ASSY# 94028176
LENGTH AS REQUIRED
(TYP 3 PLACES)

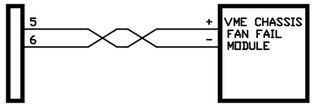

CONNECT TO P2 PINS
ON REAR OF VME CHASSIS
CABLE & CONNECTOR SUPPLIED
WITH VME CHASSIS

JUMPER LIST

E25 through E50 are configured for remote reset address
at the time of board acceptance test.
DO NOT MODIFY!

Remote reset pulls VME SYS Reset.
E58-E60, E59-E61

A24 BASE ADDRESS= 4000h
E57-E13, E2-E14, E3-E15, E4-E16, E5-E17, E6-E18
E7-E19, E8-E20, E9-E21, E10-E22, E11-E24, E57-E23
SW1=OPEN
SW2=CLOSED
SW3=OPEN
SW4=OPEN

-3	-2	-1	REF DESIGNATOR	ITEM NO.	DESCRIPTION	MAT'L DWG NO./INL NO.
QTY REQD						

INTERPRET IN GENERAL ACCORDANCE WITH ASME Y14.24M-1989

UNLESS OTHERWISE SPECIFIED DIMENSIONS ARE IN INCHES

DECIMAL TOLERANCES
.X ±.030
.XX ±.015
.XXX ±.005
ANGULAR TOLERANCE ± .5°

NA FINISH

BREAK SHARP EDGES
MAX. XX MIN. XX

OUTSTANDING ECN

Q.A. CATEGORY A-3		DATE
DRAWN BY	Venegas	6/16/03
CHECKED BY		
DESIGN APPROVAL		
ENGINEER APPROVAL		
SUPVR. APPROVAL		
NEXT ASSEMBLY		

BROOKHAVEN NATIONAL LABORATORY
UPTON, N.Y. 11973

RHIC CONTROLS WIRING DIAGRAM
1006B, VME CHASSIS CFE-6B-PS1
FT END COMP/V108 UTIL MODULE

SIZE D
DRAWING NUMBER 94028549
REV. A

MATERIAL: ——— SCALE: NA WEIGHT: — SHEET 11

*AUTOCAD

Bill Venegas, BNL 6/16/2003 1:21 PM 8549_12.dwg

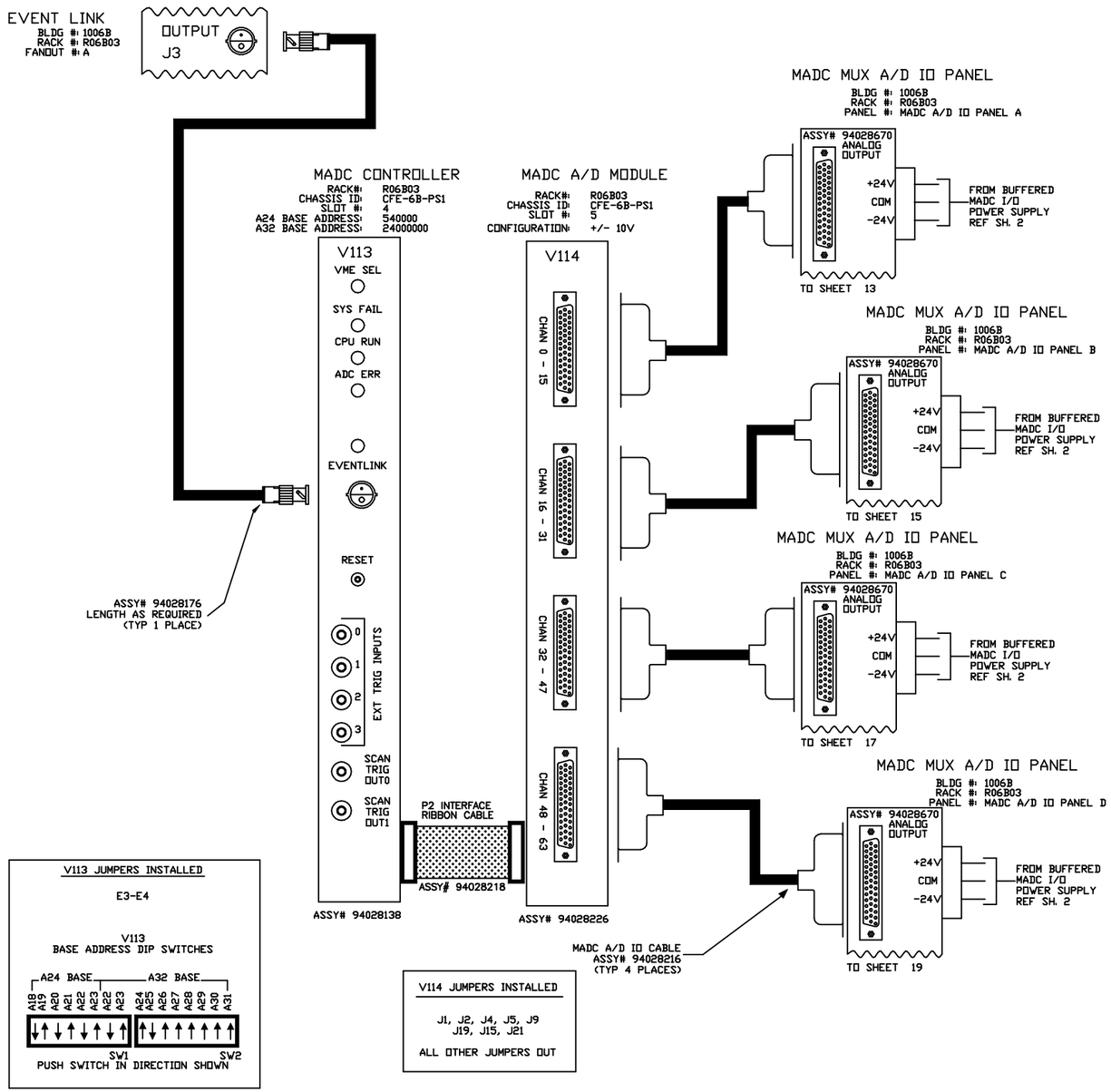

V113 JUMPERS INSTALLED

E3-E4

V113
BASE ADDRESS DIP SWITCHES

A24 BASE — A32 BASE

A19 A19 A20 A21 A22 A23 A22 A23 | A24 A25 A26 A27 A28 A29 A30 A31

SW1 SW2

PUSH SWITCH IN DIRECTION SHOWN

V114 JUMPERS INSTALLED

J1, J2, J4, J5, J9
J19, J15, J21

ALL OTHER JUMPERS OUT

REV.	ZONE	ECN NO.	DATE	BY	CKR	APP.

-3	-2	-1	REF DESIGNATOR	ITEM NO.	DESCRIPTION	MAT'L DWG NO./BNL NO.
QTY REQD						

INTERPRET IN GENERAL ACCORDANCE WITH ASME Y14.24M-1989

UNLESS OTHERWISE SPECIFIED DIMENSIONS ARE IN INCHES

DECIMAL TOLERANCES
.X ±.030
.XX ±.015
.XXX ±.005
ANGULAR TOLERANCE
± .5°

NA FINISH

BREAK SHARP EDGES
MAX. XX MIN. XX

OUTSTANDING ECN

Q.A. CATEGORY A-3	DATE	
DRAWN BY Venegas	6/16/03	
CHECKED BY		
DESIGN APPROVAL		
ENGINEER APPROVAL		
SUPVR. APPROVAL		

NEXT ASSEMBLY

BROOKHAVEN NATIONAL LABORATORY
UPTON, N.Y. 11973

RHIC CONTROLS WIRING DIAGRAM

1006B, VME CHASSIS CFE-6B-PS1

MADC SYSTEM

SIZE D — DRAWING NUMBER 94028549 — REV. A

MATERIAL: ——— SCALE: FULL WEIGHT: – SHEET 12

*AUTOCAD

REV.	ZONE	ECN NO.	DATE	BY	CKR	APP.

Bill Venegas, BNL 6/18/2003 1:41 PM 8549_13.dwg

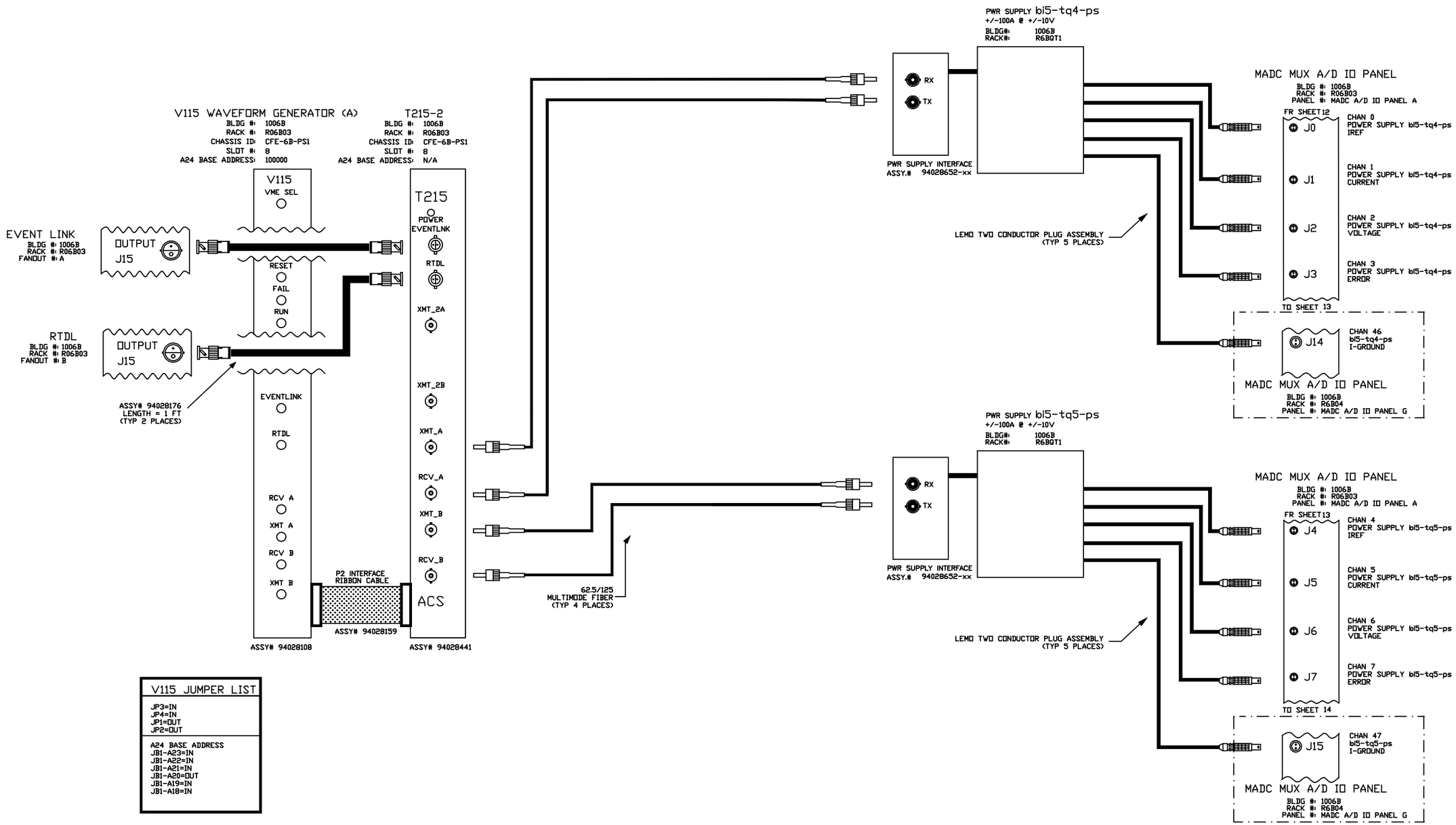

V115 JUMPER LIST
JP3=IN JP4=IN JP1=OUT JP2=OUT
A24 BASE ADDRESS JB1-A23=IN JB1-A22=IN JB1-A21=IN JB1-A20=OUT JB1-A19=IN JB1-A18=IN

-3	-2	-1	REF DESIGNATOR	ITEM NO.	DESCRIPTION	MAT'L. DWG NO./BNL NO.
QTY REQD						

INTERPRET IN GENERAL ACCORDANCE WITH ASME Y14.24M-1989

UNLESS OTHERWISE SPECIFIED DIMENSIONS ARE IN INCHES
DECIMAL TOLERANCES
.X ±.030
.XX ±.015
.XXX ±.005
ANGULAR TOLERANCE ± .5°

OUTSTANDING ECN

NA FINISH

BREAK SHARP EDGES
MAX. XX MIN. XX

Q.A. CATEGORY A-3

		DATE
DRAWN BY	Venegas	6/18/03
CHECKED BY		
DESIGN APPROVAL		
ENGINEER APPROVAL		
SUPVR. APPROVAL		

NEXT ASSEMBLY

BROOKHAVEN NATIONAL LABORATORY
UPTON, N.Y. 11973

RHIC CONTROLS WIRING DIAGRAM
BLDG. 1006B, CFE-6B-PS1
bi5-tq4-ps/bi5-tq5-ps

SIZE D
DRAWING NUMBER 94028549
REV. A

MATERIAL: ——— SCALE: NA WEIGHT: – SHEET 13

*AUTOCAD

REV.	ZONE	ECN NO.	DATE	BY	CKR	APP.

Bill Venegas, BNL 6/18/2003 2:30 PM 8549_14.dwg

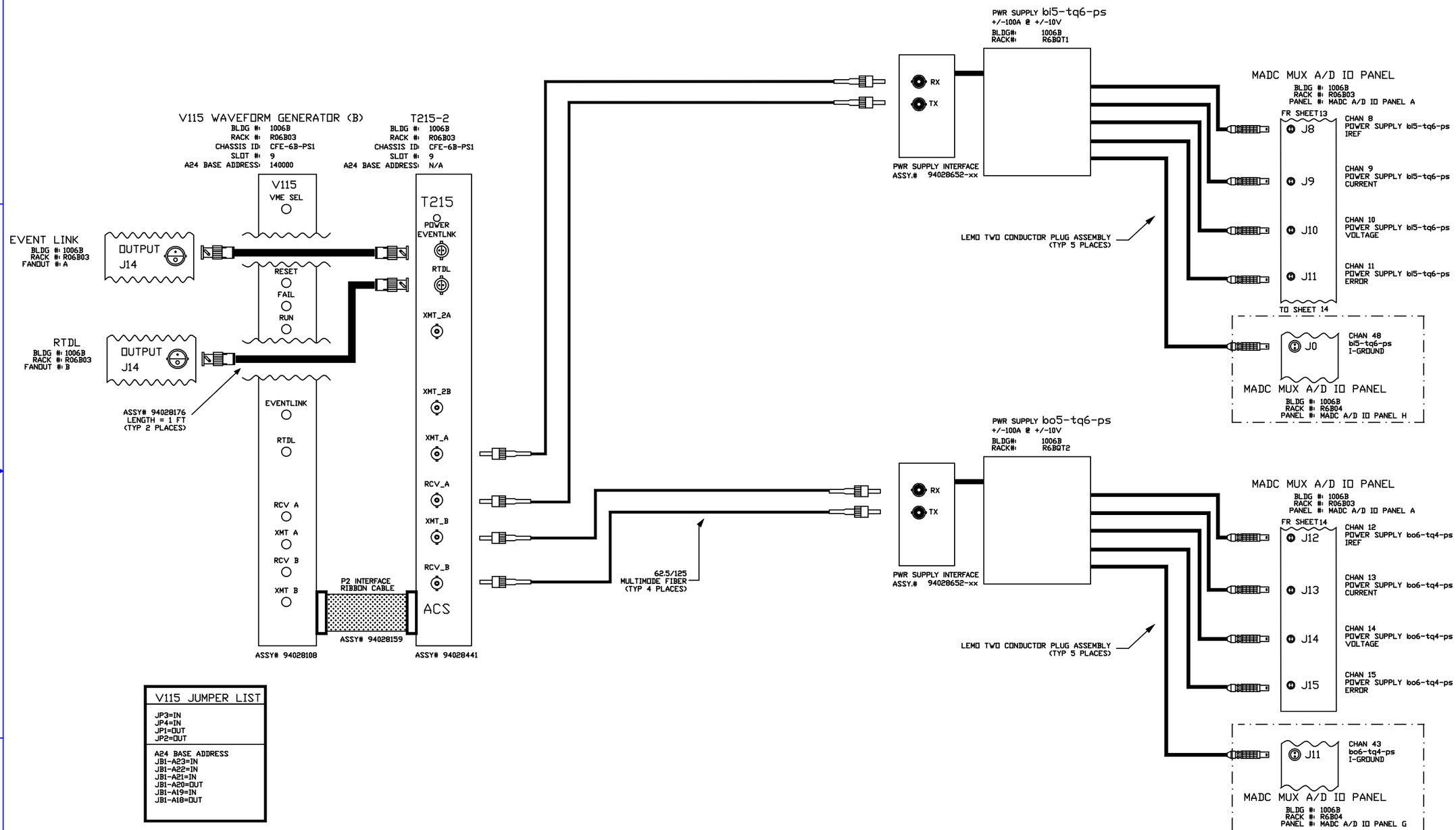

V115 JUMPER LIST
JP3=IN JP4=IN JP1=OUT JP2=OUT
A24 BASE ADDRESS JB1-A23=IN JB1-A22=IN JB1-A21=IN JB1-A20=OUT JB1-A19=IN JB1-A18=OUT

-3	-2	-1	REF DESIGNATOR	ITEM NO.	DESCRIPTION	MAT'L DWG NO./INL NO.
QTY REQD						

INTERPRET IN GENERAL ACCORDANCE WITH ASME Y14.24M-1989

UNLESS OTHERWISE SPECIFIED DIMENSIONS ARE IN INCHES

DECIMAL TOLERANCES
.X ±.030
.XX ±.015
.XXX ±.005
ANGULAR TOLERANCE
± .5°

OUTSTANDING ECN

NA FINISH

BREAK SHARP EDGES
MAX. XX MIN. XX

Q.A. CATEGORY A-3

		DATE
DRAWN BY	Venegas	6/18/03
CHECKED BY		
DESIGN APPROVAL		
ENGINEER APPROVAL		
SUPVR. APPROVAL		

NEXT ASSEMBLY

BROOKHAVEN NATIONAL LABORATORY
UPTON, N.Y. 11973

RHIC CONTROLS WIRING DIAGRAM

BLDG. 1006B, CFE-6B-PS1

bi5-tq6-ps/bo6-tq4-ps

SIZE D

94028549 DRAWING NUMBER

REV. A

MATERIAL: ——— SCALE: NA WEIGHT: – SHEET 14

*AUTOCAD

REV.	ZONE	ECN NO.	DATE	BY	CKR	APP.

Bill Venegas, BNL 6/18/2003 2:55 PM 8549_15.dwg

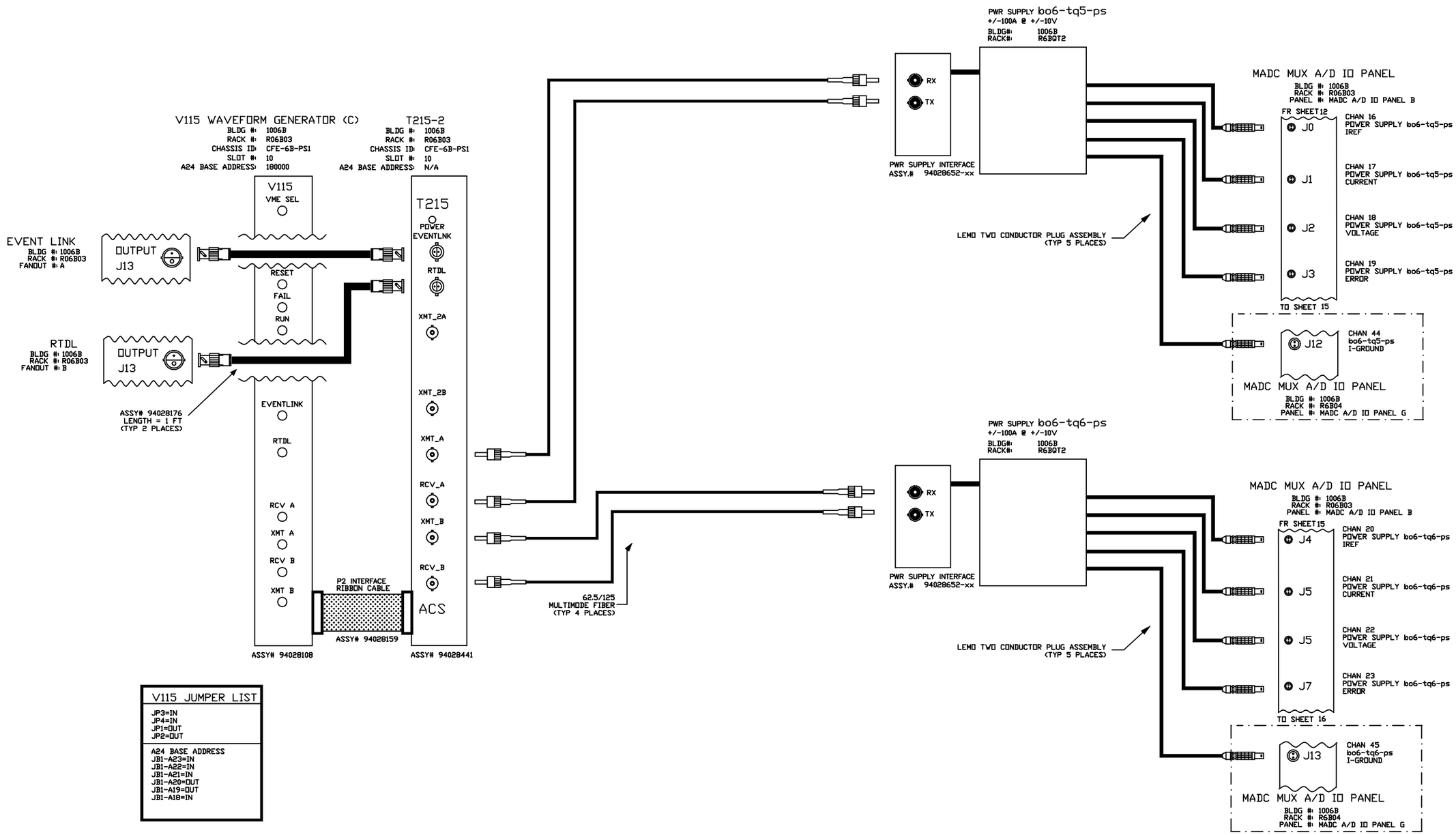

V115 JUMPER LIST
JP3=IN JP4=IN JP1=OUT JP2=OUT
A24 BASE ADDRESS JB1-A23=IN JB1-A22=IN JB1-A21=IN JB1-A20=OUT JB1-A19=OUT JB1-A18=IN

-3	-2	-1	REF DESIGNATOR	ITEM NO.	DESCRIPTION	MAT'L DWG NO./BNL NO.
QTY REQD						

INTERPRET IN GENERAL ACCORDANCE WITH ASME Y14.24M-1989

UNLESS OTHERWISE SPECIFIED DIMENSIONS ARE IN INCHES
DECIMAL TOLERANCES
.X ±.030
.XX ±.015
.XXX ±.005
ANGULAR TOLERANCE ± .5°

FINISH: NA
BREAK SHARP EDGES MAX. XX MIN. XX

OUTSTANDING ECN

Q.A. CATEGORY A-3

		DATE
DRAWN BY	Venegas	6/18/03
CHECKED BY		
DESIGN APPROVAL		
ENGINEER APPROVAL		
SUPVR. APPROVAL		

NEXT ASSEMBLY

BROOKHAVEN NATIONAL LABORATORY
UPTON, N.Y. 11973

RHIC CONTROLS WIRING DIAGRAM
BLDG. 1006B, CFE-6B-PS1
bo6-tq5-ps/bo6-tq6-ps

SIZE D
DRAWING NUMBER 94028549
REV. A

MATERIAL: ——— SCALE: NA WEIGHT: – SHEET 15

1 *AUTOCAD

Controls 9/7/99 3:55 PM 8549_16.dwg

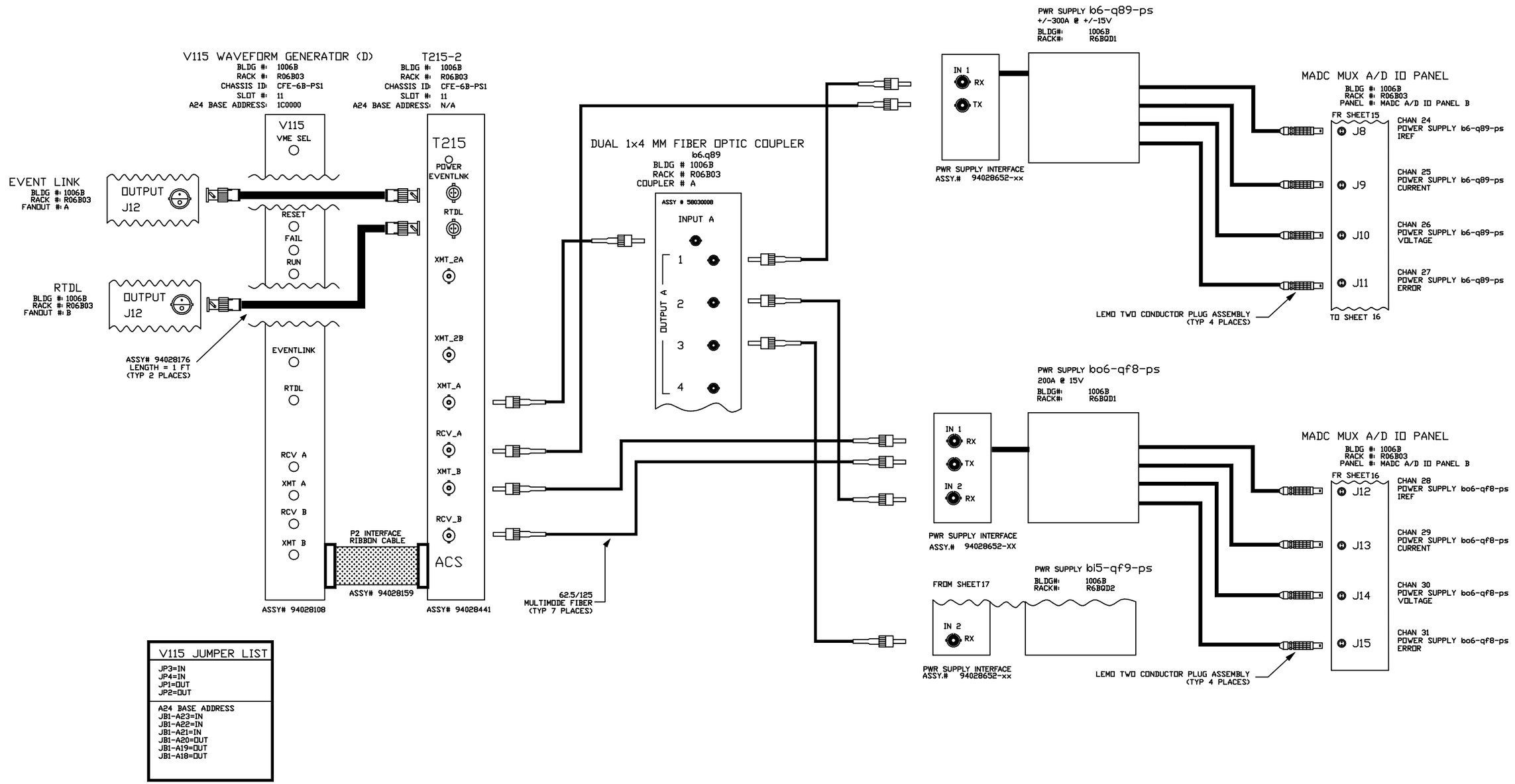

V115 JUMPER LIST
JP3=IN JP4=IN JP1=OUT JP2=OUT
A24 BASE ADDRESS JB1-A23=IN JB1-A22=IN JB1-A21=IN JB1-A20=OUT JB1-A19=OUT JB1-A18=OUT

-3	-2	-1	REF DESIGNATOR	ITEM NO.	DESCRIPTION	MAT'L DWG NO.,BNL NO.
QTY REQD						

INTERPRET IN GENERAL ACCORDANCE WITH ASME Y14.24M-1989

UNLESS OTHERWISE SPECIFIED DIMENSIONS ARE IN INCHES

DECIMAL TOLERANCES
.X ±.030
.XX ±.015
.XXX ±.005
ANGULAR TOLERANCE
± .5°

NA FINISH

BREAK SHARP EDGES
MAX. XX MIN. XX

OUTSTANDING ECN

Q.A. CATEGORY A-3		DATE
DRAWN BY	Ed Koropsak	6/2/98
CHECKED BY		
DESIGN APPROVAL		
ENGINEER APPROVAL	R.MICHNOFF	6/2/98
SUPVR. APPROVAL		

NEXT ASSEMBLY

BROOKHAVEN NATIONAL LABORATORY
UPTON, N.Y. 11973

RHIC CONTROLS WIRING DIAGRAM
BLDG. 1006B, CFE-6B-PS1
b6-q89-ps/bo6-qf8-ps

SIZE D
94028549
DRAWING NUMBER
REV. A

MATERIAL: ——— SCALE: NA WEIGHT: – SHEET 16 OF 52

*AUTOCAD

REV.	ZONE	ECN NO.	DATE	BY	CKR	APP.

Controls 9/7/99 3:60 PM 8549_17.dwg

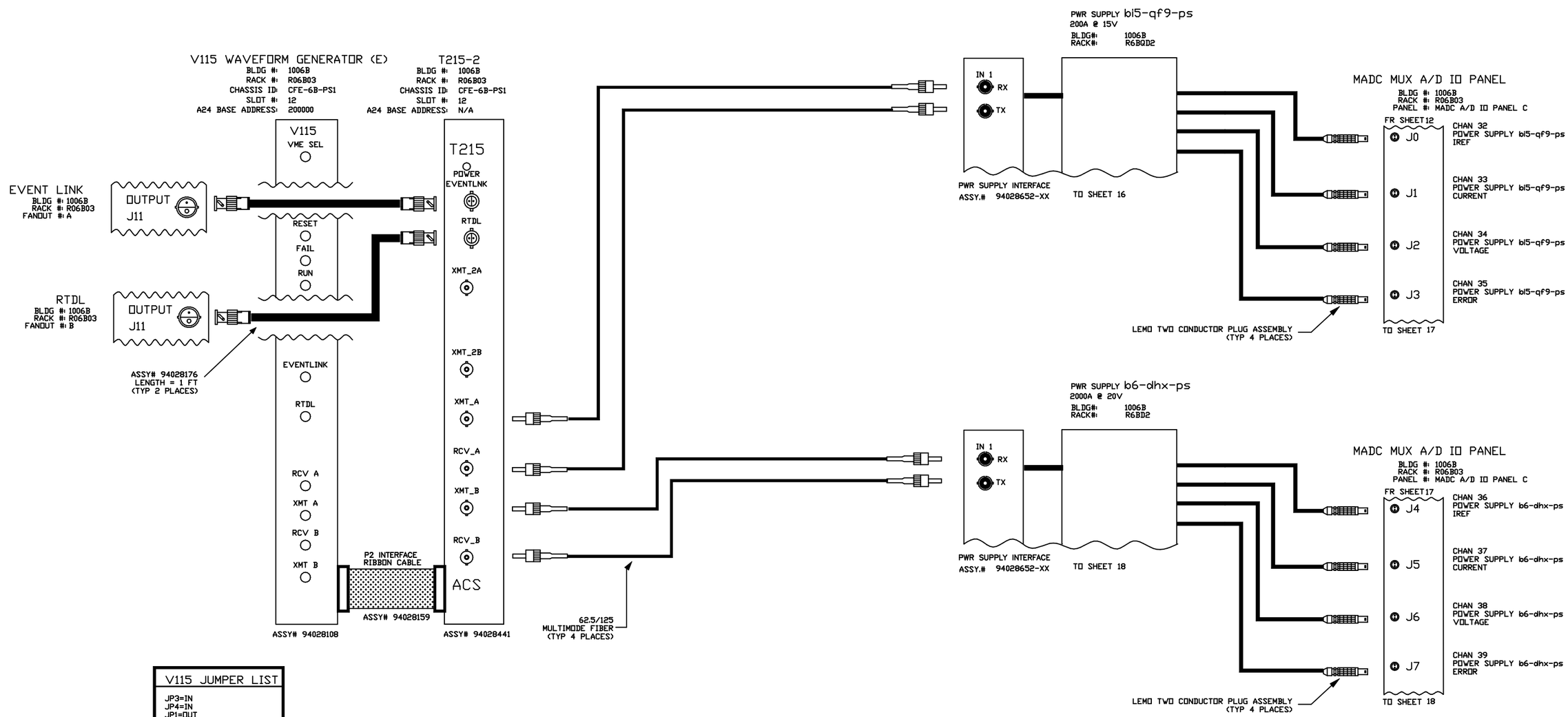

V115 JUMPER LIST
JP3=IN JP4=IN JP1=OUT JP2=OUT
A24 BASE ADDRESS JB1-A23=IN JB1-A22=IN JB1-A21=OUT JB1-A20=IN JB1-A19=IN JB1-A18=IN

-3	-2	-1	REF DESIGNATOR	ITEM NO.	DESCRIPTION	MAT'L. DWG NO./BNL NO.
QTY REQD						

INTERPRET IN GENERAL ACCORDANCE WITH ASME Y14.24M-1989

UNLESS OTHERWISE SPECIFIED DIMENSIONS ARE IN INCHES

DECIMAL TOLERANCES
.X ±.030
.XX ±.015
.XXX ±.005
ANGULAR TOLERANCE
± .5°

NA FINISH

BREAK SHARP EDGES
MAX. XX MIN. XX

OUTSTANDING ECN

Q.A. CATEGORY A-3		DATE
DRAWN BY	Ed Koropsak	6/2/98
CHECKED BY		
DESIGN APPROVAL		
ENGINEER APPROVAL	R.MICHNOFF	6/2/98
SUPVR. APPROVAL		

NEXT ASSEMBLY

BROOKHAVEN NATIONAL LABORATORY
UPTON, N.Y. 11973

RHIC CONTROLS WIRING DIAGRAM

BLDG. 1006B, CFE-6B-PS1

bi5-qf9-ps/b6-dhx-ps

SIZE D — DRAWING NUMBER 94028549 — REV. A

MATERIAL: ——— SCALE: NA WEIGHT: – SHEET 17 OF 52

*AUTOCAD

REV.	ZONE	ECN NO.	DATE	BY	CKR	APP.

Bill Venegas, BNL 6/16/2003 2:36 PM 8549_18.dwg

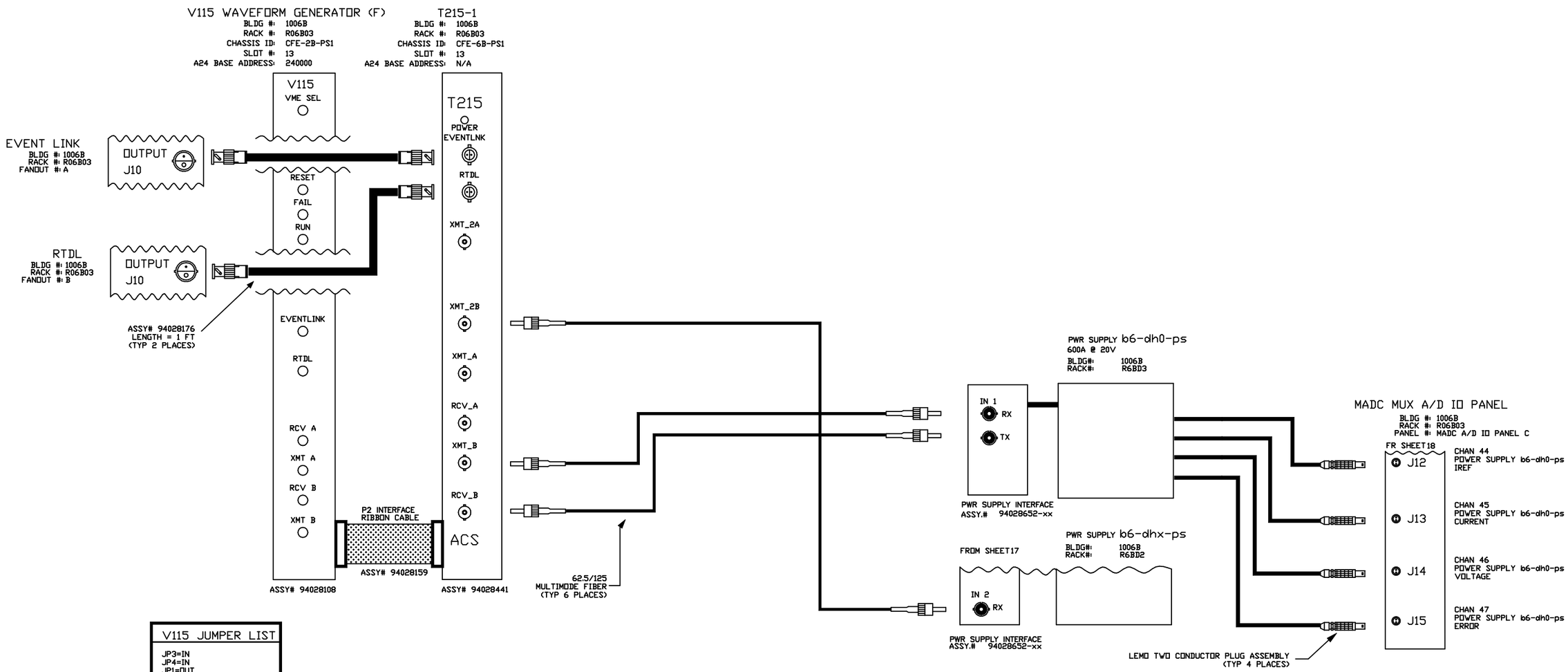

V115 JUMPER LIST
JP3=IN JP4=IN JP1=OUT JP2=OUT
A24 BASE ADDRESS JB1-A23=IN JB1-A22=IN JB1-A21=OUT JB1-A20=IN JB1-A19=IN JB1-A18=OUT

-3	-2	-1	REF DESIGNATOR	ITEM NO.	DESCRIPTION	MAT'L. DWG NO./BNL NO.
QTY REQD						

INTERPRET IN GENERAL ACCORDANCE WITH ASME Y14.24M-1989

UNLESS OTHERWISE SPECIFIED DIMENSIONS ARE IN INCHES

DECIMAL TOLERANCES
.X ±.030
.XX ±.015
.XXX ±.005
ANGULAR TOLERANCE
± .5°

NA FINISH

BREAK SHARP EDGES
MAX. XX MIN. XX

OUTSTANDING ECN

Q.A. CATEGORY A-3

		DATE
DRAWN BY	Venegas	6/16/03
CHECKED BY		
DESIGN APPROVAL		
ENGINEER APPROVAL		
SUPVR. APPROVAL		

NEXT ASSEMBLY

BROOKHAVEN NATIONAL LABORATORY
UPTON, N.Y. 11973

RHIC CONTROLS WIRING DIAGRAM
BLDG. 1006B, CFE-6B-PS1
b6-dh0-ps

SIZE D | DRAWING NUMBER 94028549 | REV. A

MATERIAL: ——— SCALE: NA WEIGHT: – SHEET 18

*AUTOCAD

REV.	ZONE	ECN NO.	DATE	BY	CKR	APP.

Bill Venegas, BNL 6/16/2003 4:11 PM 8549_19.dwg

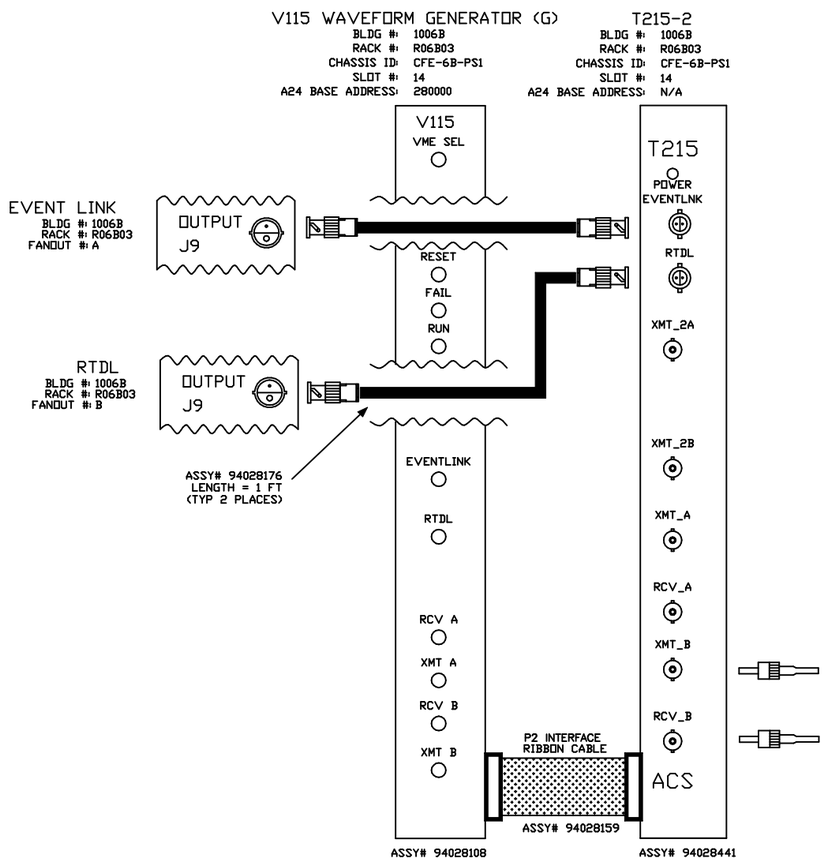

B6-SXF10-PS

THERE IS NO CONNECTION
INFORMATION FOR THESE PS'S

BO6-SXD11-PS

MADC MUX A/D IO PANEL
BLDG #: 1006B
RACK #: R06B03
PANEL #: MADC A/D IO PANEL D

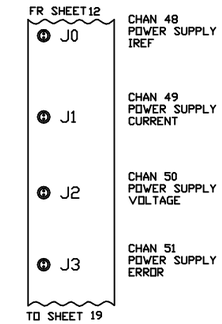

MADC MUX A/D IO PANEL
BLDG #: 1006B
RACK #: R06B03
PANEL #: MADC A/D IO PANEL D

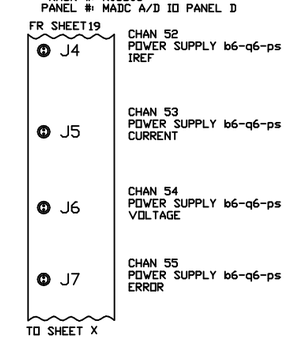

V115 JUMPER LIST
JP3=IN JP4=IN JP1=OUT JP2=OUT
A24 BASE ADDRESS JB1-A23=IN JB1-A22=IN JB1-A21=OUT JB1-A20=IN JB1-A19=OUT JB1-A18=IN

-3	-2	-1	REF DESIGNATOR	ITEM NO.	DESCRIPTION	MAT'L. DWG NO./JRNL NO.
QTY REQD						

INTERPRET IN GENERAL ACCORDANCE WITH ASME Y14.24M-1989

UNLESS OTHERWISE SPECIFIED DIMENSIONS ARE IN INCHES

DECIMAL TOLERANCES
.X ±.030
.XX ±.015
.XXX ±.005
ANGULAR TOLERANCE
± .5°

OUTSTANDING ECN

NA FINISH

BREAK SHARP EDGES
MAX. XX MIN. XX

Q.A. CATEGORY A-3		DATE
DRAWN BY	Venegas	6/16/03
CHECKED BY		
DESIGN APPROVAL		
ENGINEER APPROVAL		
SUPVR. APPROVAL		

NEXT ASSEMBLY

BROOKHAVEN NATIONAL LABORATORY
UPTON, N.Y. 11973

RHIC CONTROLS WIRING DIAGRAM
BLDG. 1006B, CFE-6B-PS1
b6-sxf10-ps/bo6-sxd11-ps

SIZE D
94028549
DRAWING NUMBER
REV. A

MATERIAL: ——— SCALE: NA WEIGHT: – SHEET 19

*AUTOCAD

REV.	ZONE	ECN NO.	DATE	BY	CKR	APP.

CONTROLS- 3/15/01 1:37 PM 8549_28.dwg

FRONT END COMPUTER

BLDG #: 1006B
RACK #: R06B04
CHASSIS ID: CFE-6B-PS2
SLOT#: 1
FEC NAME: cfe-6b-ps2

ETHERNET NETWORK

REF. NETWORK DIAGRAM

DEVICE: MEMORY BOARD

BLDG #: 1006B
RACK #: R06B04
CHASSIS ID: CFE-6B-PS2
SLOT #: 2
A24 BASE ADDRESS:

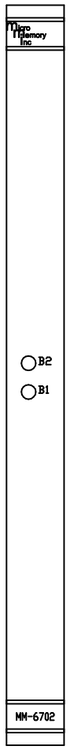

JUMPER LIST
1. REMOVE E1.
2. INSTALL E15.
3. SW3 CLOSE ALL POSITIONS.
4. SW2 CLOSE POSITIONS 7 AND 8.
5. SW1 CLOSE POSITIONS 2-8.
6. INSTALL E14 AND E25 TO ENABLE BATTERIES

DEVICE: V108 UTILITY MODULE

BLDG #: 1006B
RACK #: R06B04
CHASSIS ID: CFE-6B-PS2
SLOT #: 3
A24 BASE ADDRESS: 004000

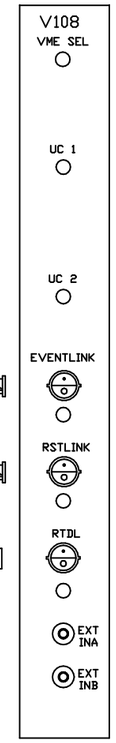

ASSY# 94028094

EVENT LINK
BLDG #: 1006B
RACK #: R06B02
FANOUT #: A

OUTPUT J9

RESET LINK
BLDG #: 1006B
RACK #: R06B02
FANOUT #: C

OUTPUT J9

REAL TIME DATA LINK
BLDG #: 1006B
RACK #: R06B02
FANOUT #: B

OUTPUT J9

ASSY# 94028176
LENGTH AS REQUIRED
(TYP 3 PLACES)

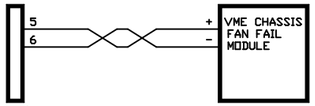

CONNECT TO P2 PINS
ON REAR OF VME CHASSIS
CABLE & CONNECTOR SUPPLIED
WITH VME CHASSIS

JUMPER LIST

E25 through E50 are configured for remote reset address
at the time of board acceptance test.
DO NOT MODIFY!

Remote reset pulls VME SYS Reset.
E58-E60, E59-E61

A24 BASE ADDRESS= 4000h
E57-E13, E2-E14, E3-E15, E4-E16, E5-E17, E6-E18
E7-E19, E8-E20, E9-E21, E10-E22, E11-E24, E57-E23
SW1=OPEN
SW2=CLOSED
SW3=OPEN
SW4=OPEN

-3	-2	-1	REF DESIGNATOR	ITEM NO.	DESCRIPTION	MAT'L DWG NO.,SPEC. NO.
QTY REQD						

INTERPRET IN GENERAL ACCORDANCE WITH ASME Y14.24M-1989

UNLESS OTHERWISE SPECIFIED DIMENSIONS ARE IN INCHES

DECIMAL TOLERANCES
.X ±.030
.XX ±.015
.XXX ±.005
ANGULAR TOLERANCE
± .5°

NA FINISH

BREAK SHARP EDGES
MAX. XX MIN. XX

OUTSTANDING ECN

Q.A. CATEGORY A-3	DATE	
DRAWN BY Ed Koropsak	6/2/98	
CHECKED BY		
DESIGN APPROVAL		
ENGINEER APPROVAL R. MICHNOFF	6/2/98	
SUPVR. APPROVAL		
NEXT ASSEMBLY		

BROOKHAVEN NATIONAL LABORATORY
UPTON, N.Y. 11973

RHIC CONTROLS WIRING DIAGRAM
1006B, VME CHASSIS CFE-6B-PS2
FT END COMP/V108 UTIL MODULE

SIZE D
DRAWING NUMBER 94028549
REV. A

MATERIAL: ——— SCALE: NA WEIGHT: — SHEET 28

*AUTOCAD

REV.	ZONE	ECN NO.	DATE	BY	CKR	APP.

CONTROLS- 3/15/01 1:39 PM 8549_29.dwg

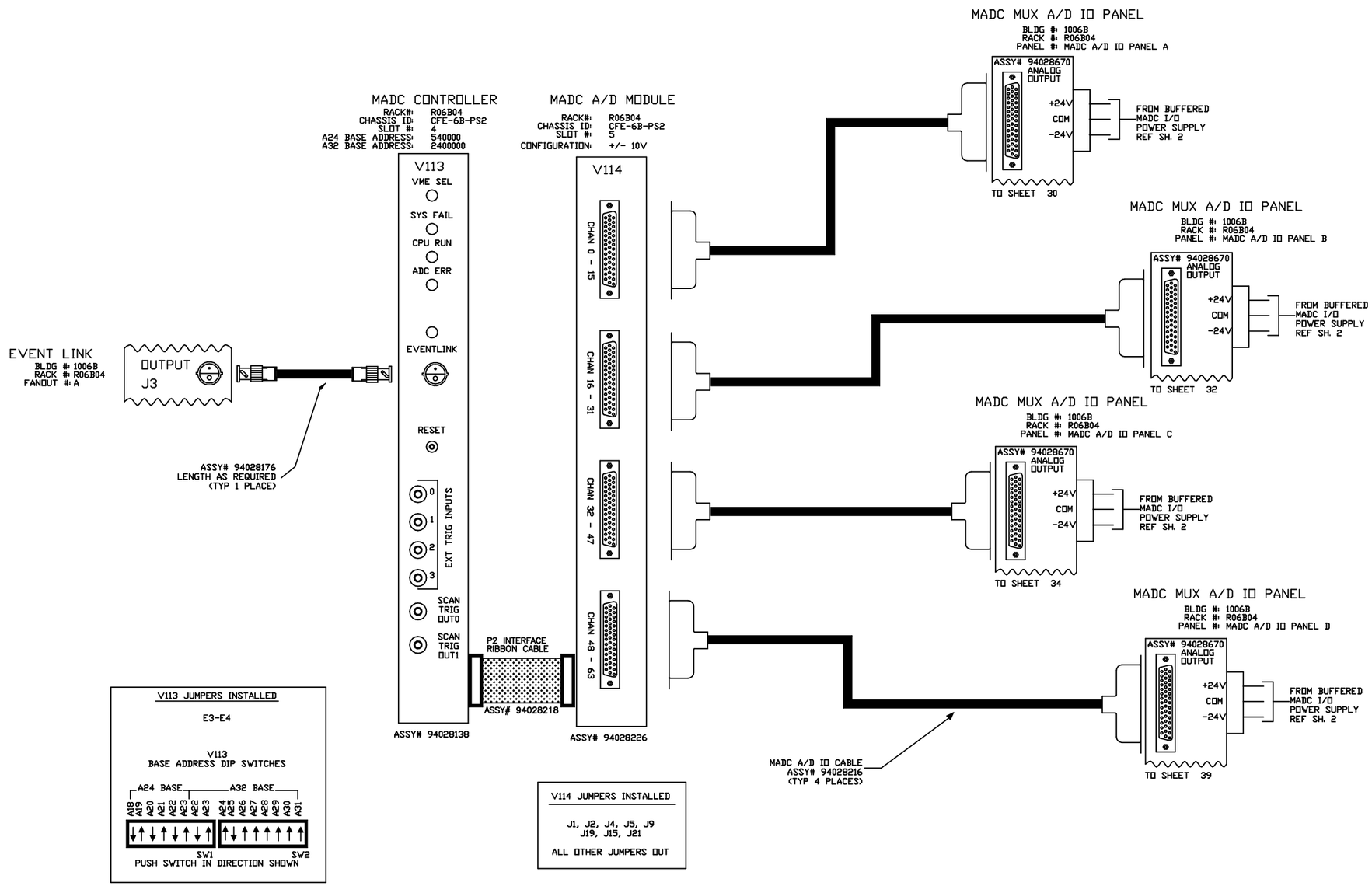

V113 JUMPERS INSTALLED

E3-E4

V113
BASE ADDRESS DIP SWITCHES

PUSH SWITCH IN DIRECTION SHOWN

V114 JUMPERS INSTALLED

J1, J2, J4, J5, J9
J19, J15, J21

ALL OTHER JUMPERS OUT

-3	-2	-1	REF DESIGNATOR	ITEM NO.	DESCRIPTION	MAT'L DWG NO./SHL NO.
QTY REQD						

INTERPRET IN GENERAL ACCORDANCE WITH ASME Y14.24M-1989

UNLESS OTHERWISE SPECIFIED DIMENSIONS ARE IN INCHES

DECIMAL TOLERANCES
.X ±.030
.XX ±.015
.XXX ±.005
ANGULAR TOLERANCE
± .5°

FINISH: NA

BREAK SHARP EDGES MAX. XX MIN. XX

OUTSTANDING ECN

Q.A. CATEGORY A-3		DATE
DRAWN BY	Ed Koropsak	6/2/98
CHECKED BY		
DESIGN APPROVAL		
ENGINEER APPROVAL	R. MICHNOFF	6/2/98
SUPVR. APPROVAL		

NEXT ASSEMBLY

BROOKHAVEN NATIONAL LABORATORY
UPTON, N.Y. 11973

RHIC CONTROLS WIRING DIAGRAM

1006B, VME CHASSIS CFE-6B-PS2

MADC SYSTEM

SIZE D — DRAWING NUMBER 94028549 — REV. A

MATERIAL: ——— SCALE: NA WEIGHT: – SHEET 29 OF 52

*AUTOCAD

REV.	ZONE	ECN NO.	DATE	BY	CKR	APP.

Bill Venegas, BNL 6/18/2003 3:54 PM 8549_30.dwg

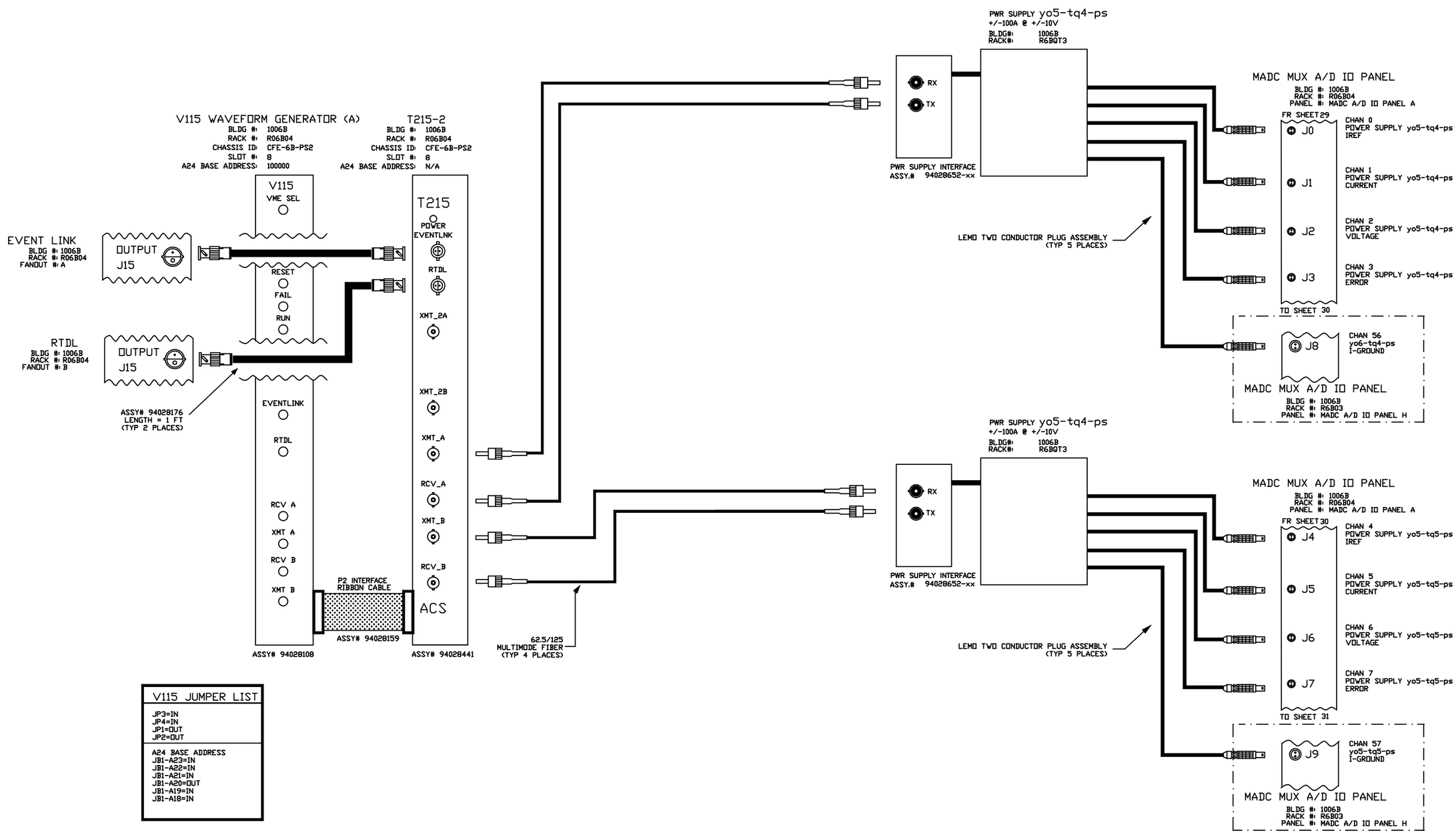

V115 JUMPER LIST
JP3=IN JP4=IN JP1=OUT JP2=OUT
A24 BASE ADDRESS JB1-A23=IN JB1-A22=IN JB1-A21=IN JB1-A20=OUT JB1-A19=IN JB1-A18=IN

-3	-2	-1	REF DESIGNATOR	ITEM NO.	DESCRIPTION	MAT'L. DWG NO./INL NO.
QTY REQD						

INTERPRET IN GENERAL ACCORDANCE WITH ASME Y14.24M-1989

UNLESS OTHERWISE SPECIFIED DIMENSIONS ARE IN INCHES

DECIMAL TOLERANCES
.X ±.030
.XX ±.015
.XXX ±.005
ANGULAR TOLERANCE ± .5°

OUTSTANDING ECN

NA FINISH

BREAK SHARP EDGES MAX. XX MIN. XX

Q.A. CATEGORY A-3

		DATE
DRAWN BY	Venegas	6/18/03
CHECKED BY		
DESIGN APPROVAL		
ENGINEER APPROVAL		
SUPVR. APPROVAL		

NEXT ASSEMBLY

BROOKHAVEN NATIONAL LABORATORY
UPTON, N.Y. 11973

RHIC CONTROLS WIRING DIAGRAM

BLDG. 1006B, CFE-6B-PS2

yo5-tq4-ps/yo5-tq5-ps

SIZE D — DRAWING NUMBER 94028549 — REV. A

MATERIAL: ——— SCALE: NA WEIGHT: – SHEET 30

*AUTOCAD

REV.	ZONE	ECN NO.	DATE	BY	CKR	APP.

Bill Venegas, BNL 6/18/2003 4:09 PM 8549_31.dwg

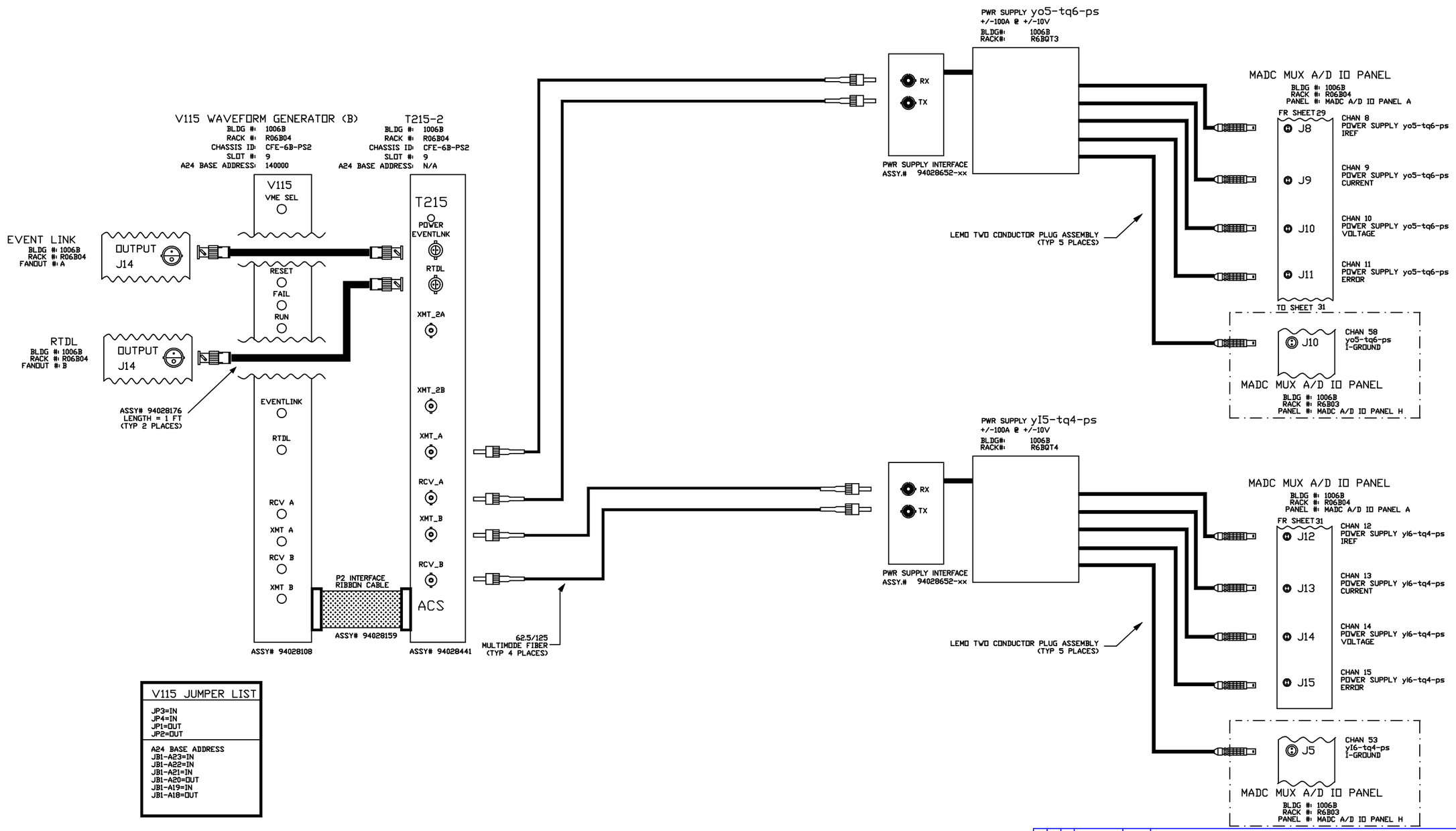

V115 JUMPER LIST
JP3=IN JP4=IN JP1=OUT JP2=OUT
A24 BASE ADDRESS JB1-A23=IN JB1-A22=IN JB1-A21=IN JB1-A20=OUT JB1-A19=IN JB1-A18=OUT

-3	-2	-1	REF DESIGNATOR	ITEM NO.	DESCRIPTION	MAT'L DWG NO./SPEC. NO.
QTY REQD						

INTERPRET IN GENERAL ACCORDANCE WITH ASME Y14.24M-1989

UNLESS OTHERWISE SPECIFIED DIMENSIONS ARE IN INCHES

DECIMAL TOLERANCES
.X ±.030
.XX ±.015
.XXX ±.005
ANGULAR TOLERANCE ± .5°

NA FINISH

BREAK SHARP EDGES
MAX. XX MIN. XX

OUTSTANDING ECN

Q.A. CATEGORY A-3

		DATE
DRAWN BY	Venegas	6/18/03
CHECKED BY		
DESIGN APPROVAL		
ENGINEER APPROVAL		
SUPVR. APPROVAL		

NEXT ASSEMBLY

BROOKHAVEN NATIONAL LABORATORY
UPTON, N.Y. 11973

RHIC CONTROLS WIRING DIAGRAM
BLDG. 1006B, CFE-6B-PS2
yo5-tq6-ps/yI6-tq4-ps

SIZE D
DRAWING NUMBER 94028549
REV. A

MATERIAL: ——— SCALE: NA WEIGHT: – SHEET 31

*AUTOCAD

REV.	ZONE	ECN NO.	DATE	BY	CKR	APP.

Bill Venegas, BNL 6/19/2003 10:49 AM 8549_32.dwg

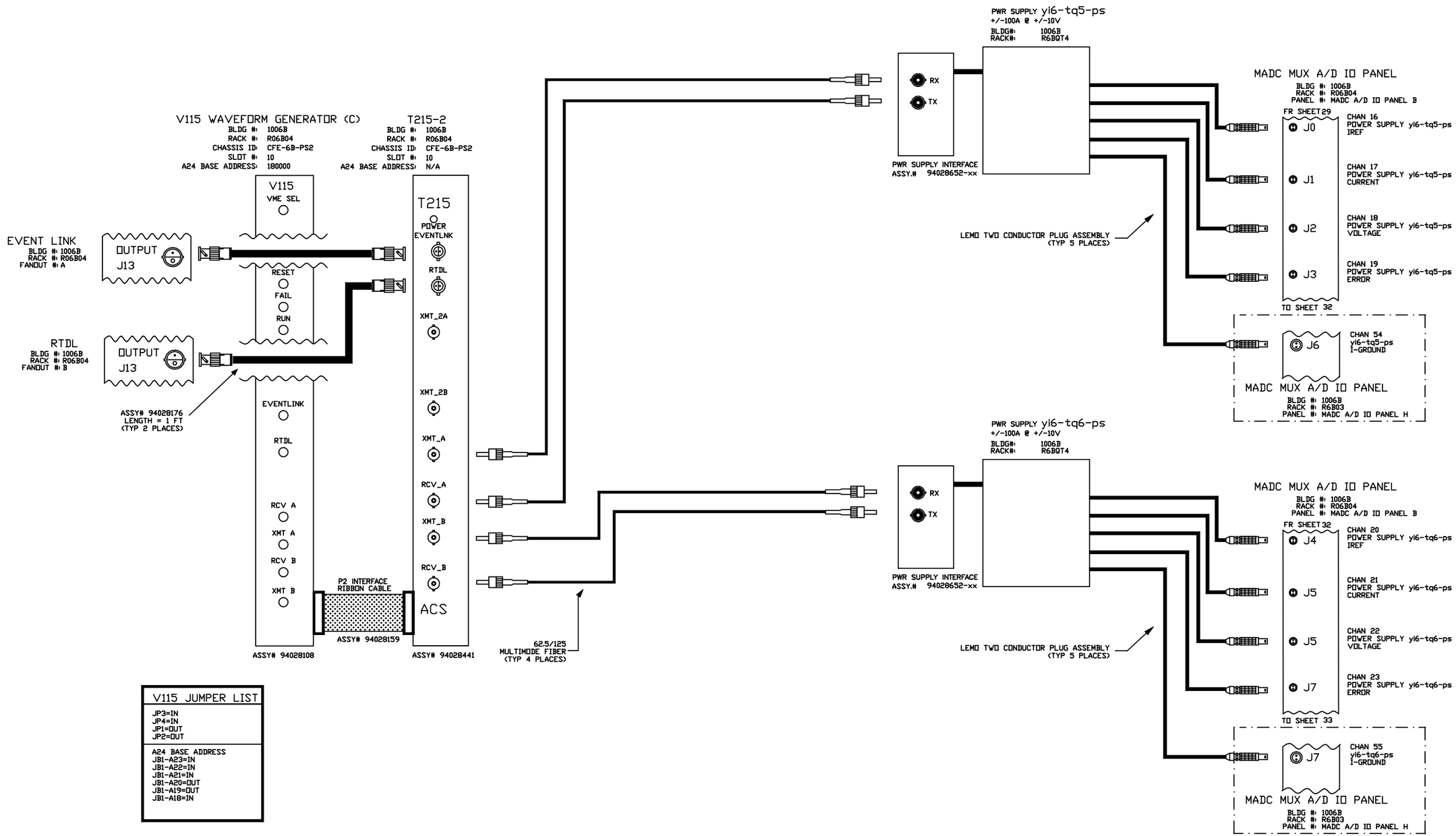

V115 JUMPER LIST
JP3=IN JP4=IN JP1=OUT JP2=OUT
A24 BASE ADDRESS JB1-A23=IN JB1-A22=IN JB1-A21=IN JB1-A20=OUT JB1-A19=OUT JB1-A18=IN

-3	-2	-1	REF DESIGNATOR	ITEM NO.	DESCRIPTION	MAT'L DWG NO./INL NO.
QTY REQD						

INTERPRET IN GENERAL ACCORDANCE WITH ASME Y14.24M-1989

UNLESS OTHERWISE SPECIFIED DIMENSIONS ARE IN INCHES

DECIMAL TOLERANCES .X ±.030 .XX ±.015 .XXX ±.005

ANGULAR TOLERANCE ± .5°

OUTSTANDING ECN

NA FINISH

BREAK SHARP EDGES MAX. XX MIN. XX

Q.A. CATEGORY A-3

		DATE
DRAWN BY	Venegas	6/19/03
CHECKED BY		
DESIGN APPROVAL		
ENGINEER APPROVAL		
SUPVR. APPROVAL		

NEXT ASSEMBLY

BROOKHAVEN NATIONAL LABORATORY
UPTON, N.Y. 11973

RHIC CONTROLS WIRING DIAGRAM

BLDG. 1006B, CFE-6B-PS2

yi6-tq5-ps/yi6-tq6-ps

SIZE D | DRAWING NUMBER 94028549 | REV. A

MATERIAL: ——— SCALE: NA WEIGHT: – SHEET 32

1 *AUTOCAD

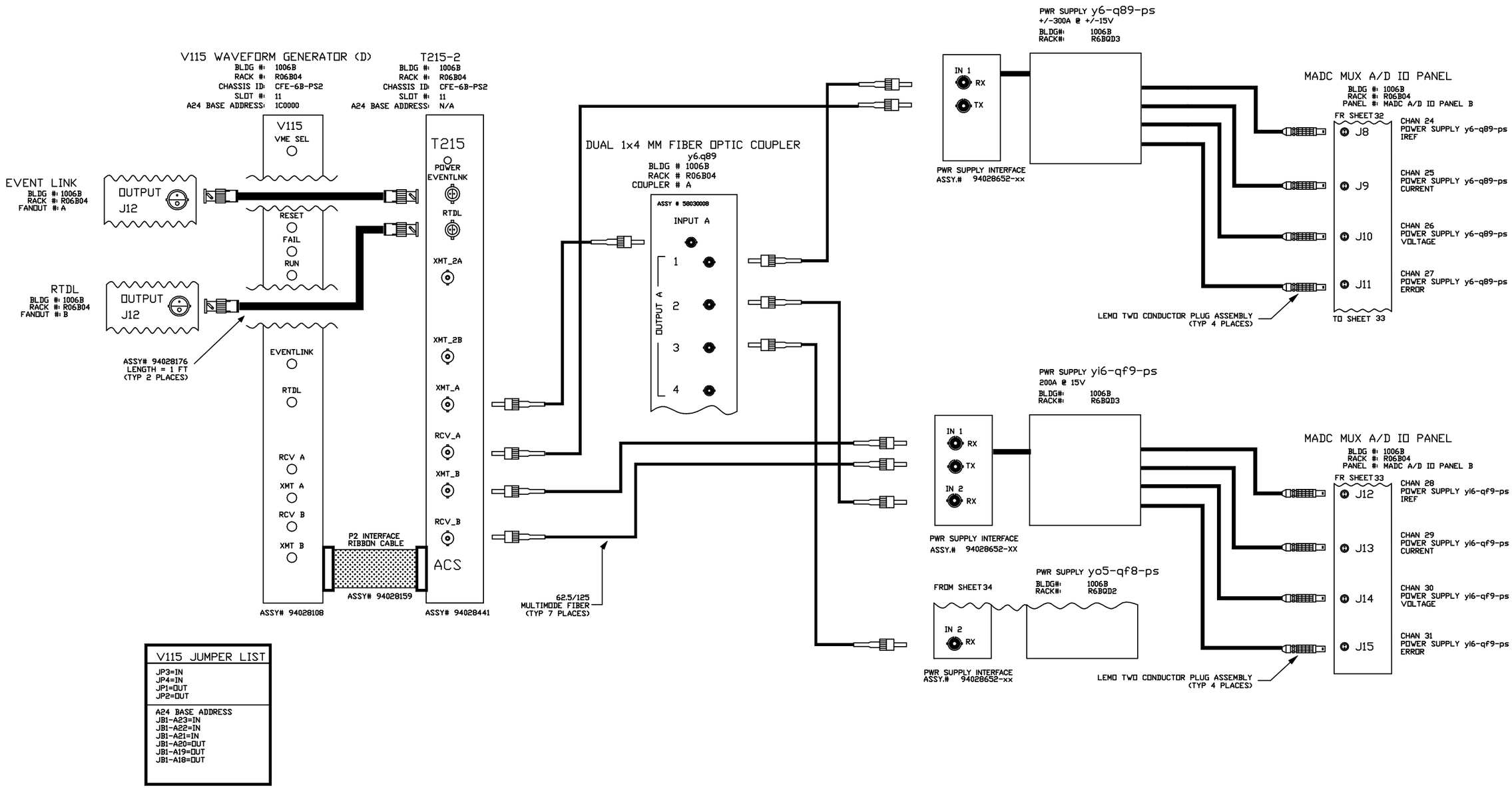

V115 JUMPER LIST
JP3=IN JP4=IN JP1=OUT JP2=OUT
A24 BASE ADDRESS JB1-A23=IN JB1-A22=IN JB1-A21=IN JB1-A20=OUT JB1-A19=OUT JB1-A18=OUT

-3	-2	-1	REF DESIGNATOR	ITEM NO.	DESCRIPTION	MAT'L DWG NO./BNL NO.
QTY REQD						

INTERPRET IN GENERAL ACCORDANCE WITH ASME Y14.24M-1989

UNLESS OTHERWISE SPECIFIED DIMENSIONS ARE IN INCHES

DECIMAL TOLERANCES
.X ±.030
.XX ±.015
.XXX ±.005
ANGULAR TOLERANCE
± .5°

NA FINISH

BREAK SHARP EDGES
MAX. XX MIN. XX

OUTSTANDING ECN

Q.A. CATEGORY A-3		DATE
DRAWN BY	Ed Koropsak	6/2/98
CHECKED BY		
DESIGN APPROVAL		
ENGINEER APPROVAL	R.MICHNOFF	6/2/98
SUPVR. APPROVAL		

NEXT ASSEMBLY

BROOKHAVEN NATIONAL LABORATORY
UPTON, N.Y. 11973

RHIC CONTROLS WIRING DIAGRAM
BLDG. 1006B, CFE-6B-PS1
y6-q89-ps/yi6-qf9-ps

SIZE D
94028549
DRAWING NUMBER
REV. A

MATERIAL: ——— SCALE: NA WEIGHT: – SHEET 33 OF 52

*AUTOCAD

REV.	ZONE	ECN NO.	DATE	BY	CKR	APP.

Controls 9/8/99 1:41 PM 8549_34.dwg

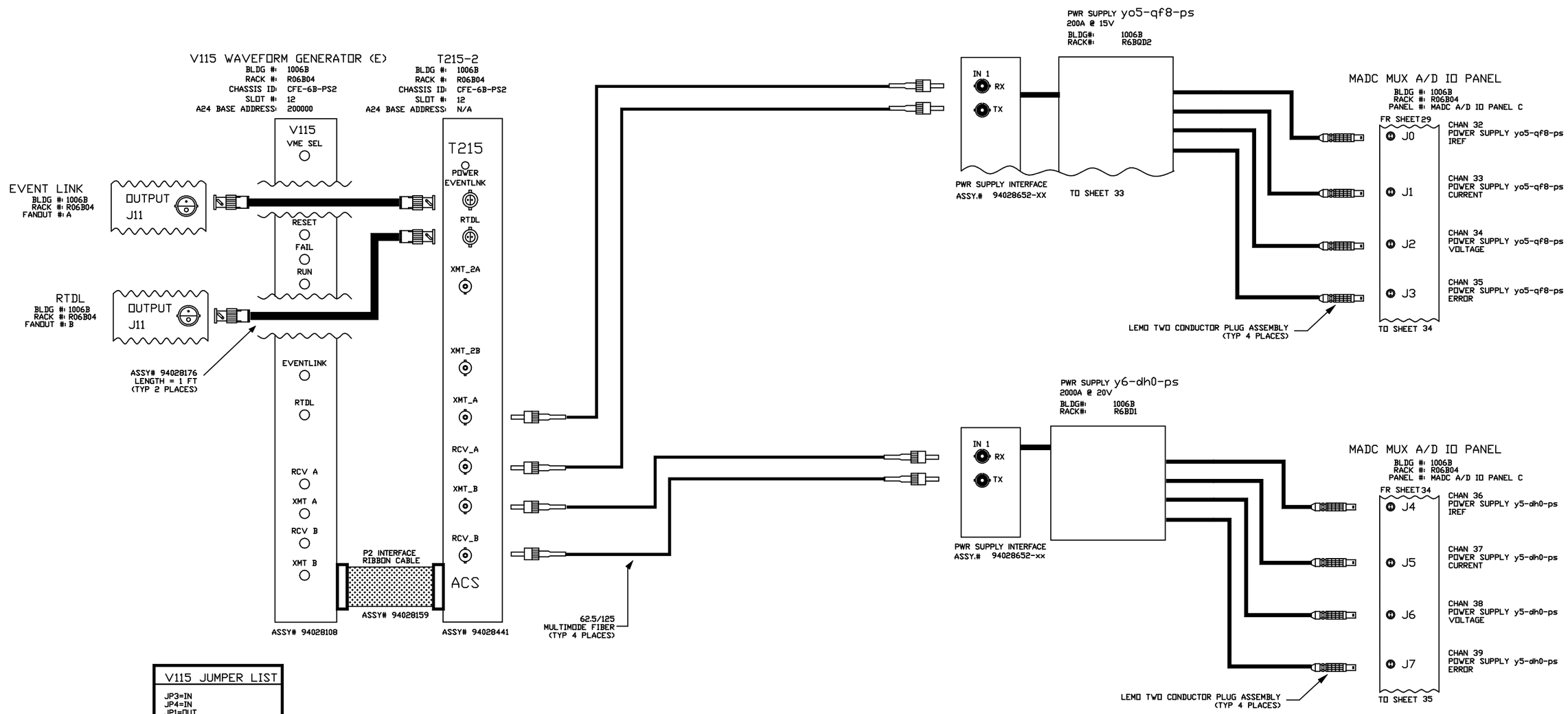

V115 JUMPER LIST
JP3=IN JP4=IN JP1=OUT JP2=OUT
A24 BASE ADDRESS JB1-A23=IN JB1-A22=IN JB1-A21=OUT JB1-A20=IN JB1-A19=IN JB1-A18=IN

-3	-2	-1	REF DESIGNATOR	ITEM NO.	DESCRIPTION	MAT'L. DWG NO./INL NO.
QTY REQD						

INTERPRET IN GENERAL ACCORDANCE WITH ASME Y14.24M-1989

UNLESS OTHERWISE SPECIFIED DIMENSIONS ARE IN INCHES

DECIMAL TOLERANCES
X ±.030
.XX ±.015
.XXX ±.005
ANGULAR TOLERANCE
± .5°

NA FINISH

BREAK SHARP EDGES
MAX. XX MIN. XX

OUTSTANDING ECN

Q.A. CATEGORY A-3		DATE
DRAWN BY	Ed Koropsak	6/2/98
CHECKED BY		
DESIGN APPROVAL		
ENGINEER APPROVAL	R.MICHNOFF	6/2/98
SUPVR. APPROVAL		

NEXT ASSEMBLY

BROOKHAVEN NATIONAL LABORATORY
UPTON, N.Y. 11973

RHIC CONTROLS WIRING DIAGRAM
BLDG. 1006B, CFE-6B-PS2
yo5-qf8-ps/y6-dh0-ps

SIZE D | 94028549 | REV. A
DRAWING NUMBER

MATERIAL: ——— SCALE: NA WEIGHT: – SHEET 34 OF 52

*AUTOCAD

Bill Venegas, BNL 6/19/2003 11:05 AM 8549_35.dwg

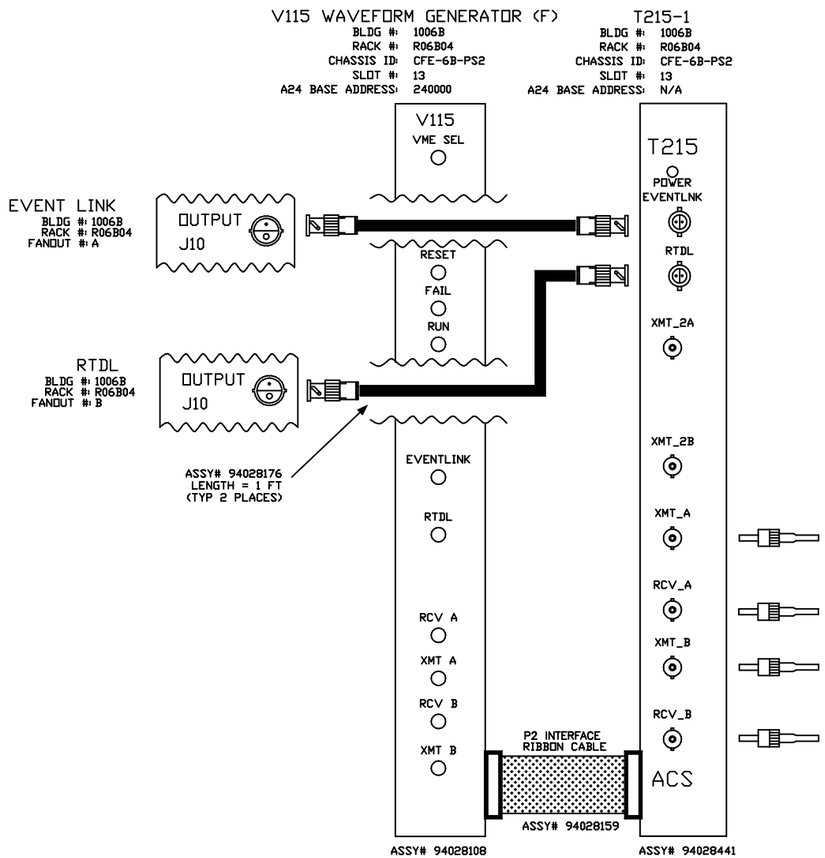

V115 JUMPER LIST
JP3=IN JP4=IN JP1=OUT JP2=OUT
A24 BASE ADDRESS JB1-A23=IN JB1-A22=IN JB1-A21=OUT JB1-A20=IN JB1-A19=IN JB1-A18=OUT

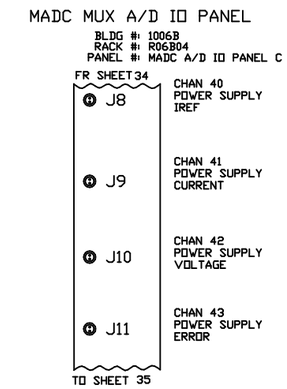

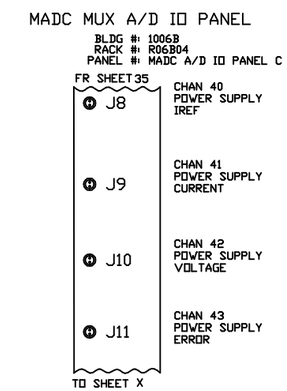

REV.	ZONE	ECN NO.	DATE	BY	CKR	APP.

-3	-2	-1	REF DESIGNATOR	ITEM NO.	DESCRIPTION	MAT'L DWG NO.,SPEC. NO.
QTY REQD						

INTERPRET IN GENERAL ACCORDANCE WITH ASME Y14.24M-1989

UNLESS OTHERWISE SPECIFIED DIMENSIONS ARE IN INCHES

DECIMAL TOLERANCES
.X ±.030
.XX ±.015
.XXX ±.005
ANGULAR TOLERANCE ± .5°

NA FINISH

BREAK SHARP EDGES MAX. XX MIN. XX

OUTSTANDING ECN

Q.A. CATEGORY	A-3	DATE	
DRAWN BY	Venegas	6/19/03	
CHECKED BY			
DESIGN APPROVAL			
ENGINEER APPROVAL	R.MICHNOFF	6/2/98	
SUPVR. APPROVAL			
NEXT ASSEMBLY			

BROOKHAVEN NATIONAL LABORATORY
UPTON, N.Y. 11973

RHIC CONTROLS WIRING DIAGRAM

BLDG. 1006B, CFE-6B-PS2

SPARE

SIZE D — DRAWING NUMBER 94028549 — REV. A

MATERIAL: ——— SCALE: NA WEIGHT: – SHEET 35

*AUTOCAD

REV.	ZONE	ECN NO.	DATE	BY	CKR	APP.

Controls, bnl 2/2/2005 9:43 AM 8549_36.dwg

V124 BEAM SYNC TRIGGER MODULE-A (BLUE)

BLDG #: 1006B
RACK #: R6B04
CHASSIS ID: CFE-6B-PS2
SLOT #: 18
A16 BASE ADDRESS: 0X9000

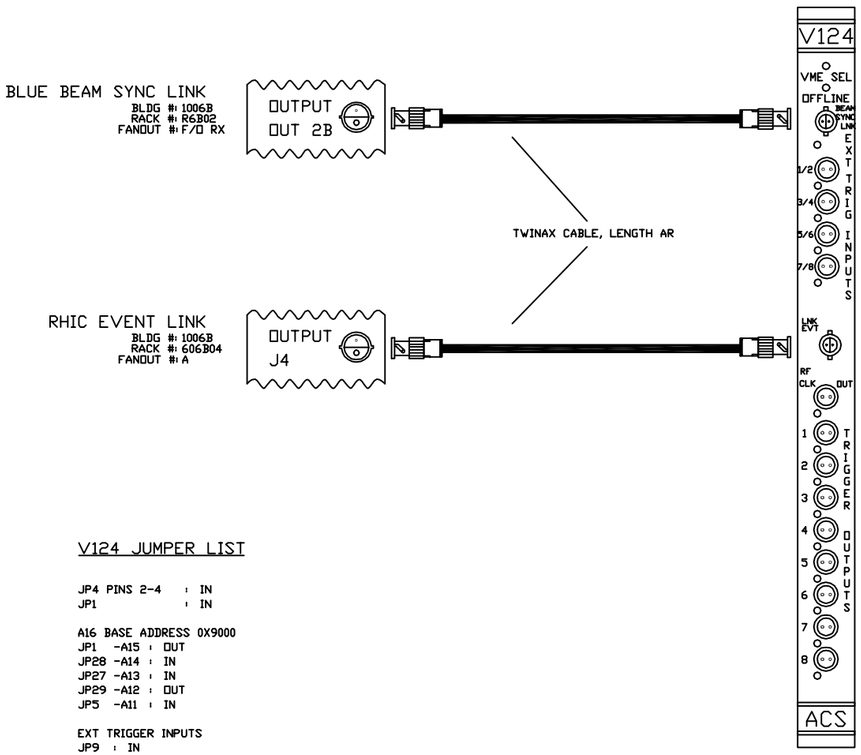

V124 JUMPER LIST

JP4 PINS 2-4 : IN
JP1 : IN

A16 BASE ADDRESS 0X9000
JP1 -A15 : OUT
JP28 -A14 : IN
JP27 -A13 : IN
JP29 -A12 : OUT
JP5 -A11 : IN

EXT TRIGGER INPUTS
JP9 : IN
JP8 : OUT
JP14 : IN
JP10 : IN
JP11 : OUT
JP15 : IN
JP16 : IN
JP17 : OUT
JP18 : IN
JP21 : IN
JP22 : OUT
JP23 : IN

TRIGGER OUTPUTS
ALL : IN

-3	-2	-1	REF DESIGNATOR	ITEM NO.	DESCRIPTION	MAT'L DWG NO./SHL NO.
QTY REQD						

INTERPRET IN GENERAL ACCORDANCE WITH ASME Y14.24M-1989
UNLESS OTHERWISE SPECIFIED DIMENSIONS ARE IN INCHES
DECIMAL TOLERANCES .X ±.030 .XX ±.015 .XXX ±.005
ANGULAR TOLERANCE ± .5°
FINISH: NA
BREAK SHARP EDGES MAX. XX MIN. XX
OUTSTANDING ECN

Q.A. CATEGORY A-3
DRAWN BY: Ed Koropsak DATE: 2/2/05
CHECKED BY
DESIGN APPROVAL
ENGINEER APPROVAL: Rob Michnoff
SUPVR. APPROVAL
NEXT ASSEMBLY

BROOKHAVEN NATIONAL LABORATORY
UPTON, N.Y. 11973
RHIC CONTROLS
SERVICE BLDG. 1006B
V124_BLUE (A MODULE)
SIZE D
94028549
DRAWING NUMBER
REV. A
MATERIAL:
SCALE: NA
WEIGHT:
SHEET 36

*AUTOCAD

REV.	ZONE	ECN NO.	DATE	BY	CKR	APP.

CONTROLS- 3/15/01 1:54 PM 8549_42.dwg

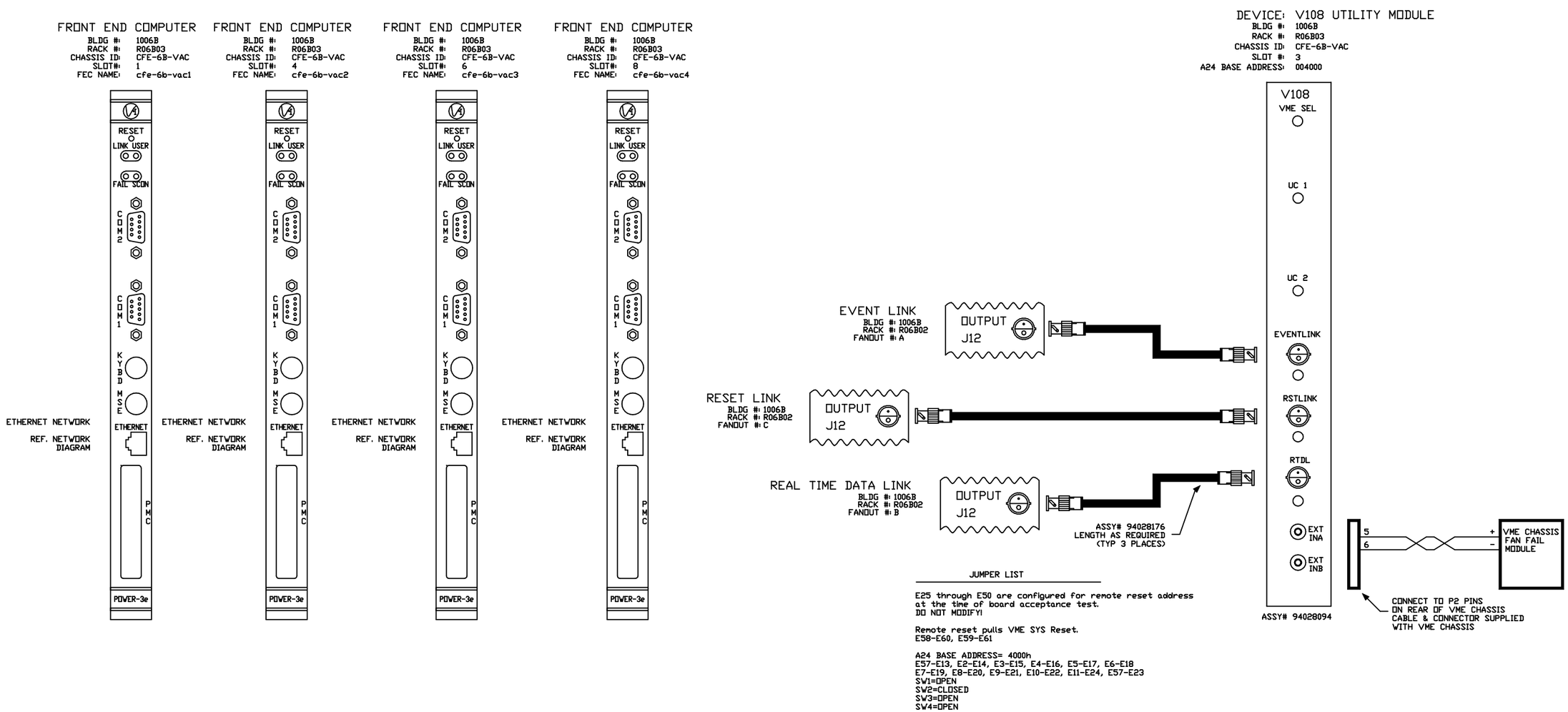

JUMPER LIST

E25 through E50 are configured for remote reset address
at the time of board acceptance test.
DO NOT MODIFY!

Remote reset pulls VME SYS Reset.
E58-E60, E59-E61

A24 BASE ADDRESS= 4000h
E57-E13, E2-E14, E3-E15, E4-E16, E5-E17, E6-E18
E7-E19, E8-E20, E9-E21, E10-E22, E11-E24, E57-E23
SW1=OPEN
SW2=CLOSED
SW3=OPEN
SW4=OPEN

-3	-2	-1	REF DESIGNATOR	ITEM NO.	DESCRIPTION	MAT'L DWG NO./BNL NO.
QTY REQD						

INTERPRET IN GENERAL ACCORDANCE WITH ASME Y14.24M-1989	Q.A. CATEGORY A-3	DATE	BROOKHAVEN NATIONAL LABORATORY
	DRAWN BY Ed Koropsak	6/2/98	UPTON, N.Y. 11973
UNLESS OTHERWISE SPECIFIED DIMENSIONS ARE IN INCHES	CHECKED BY		RHIC CONTROLS WIRING DIAGRAM
DECIMAL TOLERANCES .X ±.030 .XX ±.015 .XXX ±.005 ANGULAR TOLERANCE ± .5°	DESIGN APPROVAL		1006B, VME CHASSIS CFE-6B-VAC
	ENGINEER APPROVAL R. MICHNOFF	6/2/98	FT END COMP/V108 UTIL MODULE
	SUPVR. APPROVAL		SIZE D / DRAWING NUMBER 94028549 / REV. A
NA FINISH / BREAK SHARP EDGES MAX. XX MIN. XX	NEXT ASSEMBLY		
OUTSTANDING ECN			MATERIAL: — / SCALE: NA / WEIGHT: — / SHEET 42 OF 52

1 *AUTOCAD

REV.	ZONE	ECN NO.	DATE	BY	CKR	APP.

Bill Venegas, BNL 6/20/2003 11:57 AM 8549_46.dwg

SIS3803 SCALER
BLDG #: 1006B
RACK #: R6B03
CHASSIS ID: CFE-6B-PS2
SLOT #: 21
A32 BASE ADDRESS: 0X8383000

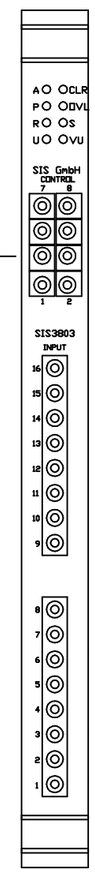

FROM V102 SLOT 11 CH 1
CFE-10A-PS3

TO:_____
TO:_____
TO:_____
TO:_____
TO:_____
TO:_____
TO:_____
TO:_____

TO:_____
TO:_____
TO:_____
TO:_____
TO:_____
TO:_____
TO:_____
TO:_____

BOARD ADDRESS JUMPERS

EN_A16:	OUT	J101-108:	IN
EN_A24:	OUT	J115:	OUT
EN_A32:	IN	J500:	IN
		J520:	IN

SW_A32U: 0
SW_A32L: 8
SW_A24U: 3
SW_A24L: 8
SW_A16U: 3

J_A11: IN

-3	-2	-1	REF DESIGNATOR	ITEM NO.	DESCRIPTION	MAT'L. DWG NO./INV. NO.
QTY REQD						

INTERPRET IN GENERAL ACCORDANCE WITH ASME Y14.24M-1989
UNLESS OTHERWISE SPECIFIED DIMENSIONS ARE IN INCHES
DECIMAL TOLERANCES .X ±.030 .XX ±.015 .XXX ±.005
ANGULAR TOLERANCE ± .5°
OUTSTANDING ECN
NA FINISH
BREAK SHARP EDGES MAX. XX MIN. XX

Q.A. CATEGORY A-3 DATE
DRAWN BY Venegas 6/20/03
CHECKED BY
DESIGN APPROVAL
ENGINEER APPROVAL
SUPVR. APPROVAL
NEXT ASSEMBLY

BROOKHAVEN NATIONAL LABORATORY
UPTON, N.Y. 11973
RHIC CONTROLS WIRING DIAGRAM
BLDG. 1006B, CHASSIS CFE-6B-PS2
CHIPMUNK SCALER

SIZE D DRAWING NUMBER REV. A
MATERIAL: ——— SCALE: NA WEIGHT: – SHEET 46

*AUTOCAD

REV.	ZONE	ECN NO.	DATE	BY	CKR	APP.

Bill Venegas, BNL 6/19/2003 2:53 PM 8549_47.dwg

MADC MUX A/D IO PANEL
BLDG #: 1006B
RACK #: R06B03
PANEL #: MADC A/D IO PANEL C
FR SHEET 17

J8	CHAN 40 POWER SUPPLY IREF
J9	CHAN 41 POWER SUPPLY CURRENT
J10	CHAN 42 POWER SUPPLY VOLTAGE
J11	CHAN 43 POWER SUPPLY ERROR

TO SHEET 18

MADC MUX A/D IO PANEL
BLDG #: 1006B
RACK #: R06B04
PANEL #: MADC A/D IO PANEL D
FR SHEET 29

J0	CHAN 48 POWER SUPPLY IREF
J1	CHAN 49 POWER SUPPLY CURRENT
J2	CHAN 50 POWER SUPPLY VOLTAGE
J3	CHAN 51 POWER SUPPLY ERROR

TO SHEET 47

MADC MUX A/D IO PANEL
BLDG #: 1006B
RACK #: R06B04
PANEL #: MADC A/D IO PANEL D
FR SHEET 47

J12	CHAN 60 POWER SUPPLY IREF
J13	CHAN 61 POWER SUPPLY CURRENT
J14	CHAN 62 POWER SUPPLY VOLTAGE
J15	CHAN 63 POWER SUPPLY ERROR

TO SHEET NONE

MADC MUX A/D IO PANEL
BLDG #: 1006B
RACK #: R06B04
PANEL #: MADC A/D IO PANEL G
FR SHEET 61

J0	CHAN 32 POWER SUPPLY IREF
J1	CHAN 33 POWER SUPPLY CURRENT
J2	CHAN 34 POWER SUPPLY VOLTAGE
J3	CHAN 35 POWER SUPPLY ERROR

TO SHEET 47

MADC MUX A/D IO PANEL
BLDG #: 1006B
RACK #: R06B03
PANEL #: MADC A/D IO PANEL G
FR SHEET 61

J0	CHAN 32 POWER SUPPLY IREF
J1	CHAN 33 POWER SUPPLY CURRENT
J2	CHAN 34 POWER SUPPLY VOLTAGE
J3	CHAN 35 POWER SUPPLY ERROR

TO SHEET 47

MADC MUX A/D IO PANEL
BLDG #: 1006B
RACK #: R06B03
PANEL #: MADC A/D IO PANEL D
FR SHEET 19

J8	CHAN 56 POWER SUPPLY IREF
J9	CHAN 57 POWER SUPPLY CURRENT
J10	CHAN 58 POWER SUPPLY VOLTAGE
J11	CHAN 59 POWER SUPPLY ERROR

TO SHEET 47

MADC MUX A/D IO PANEL
BLDG #: 1006B
RACK #: R06B04
PANEL #: MADC A/D IO PANEL D
FR SHEET 47

J4	CHAN 52 POWER SUPPLY IREF
J5	CHAN 53 POWER SUPPLY CURRENT
J6	CHAN 54 POWER SUPPLY VOLTAGE
J7	CHAN 55 POWER SUPPLY ERROR

TO SHEET 47

MADC MUX A/D IO PANEL
BLDG #: 1006B
RACK #: R06B03
PANEL #: MADC A/D IO PANEL D
FR SHEET 47

J12	CHAN 60 POWER SUPPLY IREF
J13	CHAN 61 POWER SUPPLY CURRENT
J14	CHAN 62 POWER SUPPLY VOLTAGE
J15	CHAN 63 POWER SUPPLY ERROR

MADC MUX A/D IO PANEL
BLDG #: 1006B
RACK #: R06B04
PANEL #: MADC A/D IO PANEL D
FR SHEET 47

J8	CHAN 56 POWER SUPPLY IREF
J9	CHAN 57 POWER SUPPLY CURRENT
J10	CHAN 58 POWER SUPPLY VOLTAGE
J11	CHAN 59 POWER SUPPLY ERROR

TO SHEET 47

MADC MUX A/D IO PANEL
BLDG #: 1006B
RACK #: R06B04
PANEL #: MADC A/D IO PANEL G
FR SHEET 47

J4	CHAN 36 POWER SUPPLY IREF
J5	CHAN 37 POWER SUPPLY CURRENT
J6	CHAN 38 POWER SUPPLY VOLTAGE
J7	CHAN 39 POWER SUPPLY ERROR

TO SHEET 47

MADC MUX A/D IO PANEL
BLDG #: 1006B
RACK #: R06B04
PANEL #: MADC A/D IO PANEL G
FR SHEET 47

J8	CHAN 40 POWER SUPPLY IREF
J9	CHAN 41 POWER SUPPLY CURRENT
J10	CHAN 42 POWER SUPPLY VOLTAGE

TO SHEET 14

MADC MUX A/D IO PANEL
BLDG #: 1006B
RACK #: R06B03
PANEL #: MADC A/D IO PANEL G
FR SHEET 47

J4	CHAN 36 POWER SUPPLY IREF
J5	CHAN 37 POWER SUPPLY CURRENT
J6	CHAN 38 POWER SUPPLY VOLTAGE
J7	CHAN 39 POWER SUPPLY ERROR

TO SHEET 47

MADC MUX A/D IO PANEL
BLDG #: 100XX
RACK #: R6B03
PANEL #: MADC A/D IO PANEL G
FR SHEET 47

J8	CHAN 40 POWER SUPPLY SETPOINT

-3	-2	-1	REF DESIGNATOR	ITEM NO.	DESCRIPTION	MAT'L. DWG NO./BNL NO.
QTY REQD						

INTERPRET IN GENERAL ACCORDANCE WITH ASME Y14.24M-1989

UNLESS OTHERWISE SPECIFIED DIMENSIONS ARE IN INCHES

DECIMAL TOLERANCES
.X ±.030
.XX ±.015
.XXX ±.005
ANGULAR TOLERANCE ± .5°

OUTSTANDING ECN

NA FINISH

BREAK SHARP EDGES MAX. XX MIN. XX

Q.A. CATEGORY A-3	DATE	
DRAWN BY Venegas	6/19/03	
CHECKED BY		
DESIGN APPROVAL		
ENGINEER APPROVAL		
SUPVR. APPROVAL		
NEXT ASSEMBLY		

BROOKHAVEN NATIONAL LABORATORY
UPTON, N.Y. 11973

RHIC CONTROLS WIRING DIAGRAM
BLDG. 1006B
SPARE MADC CHANNELS

SIZE D
DRAWING NUMBER 94028549
REV. A

MATERIAL: ——— SCALE: NA WEIGHT: – SHEET 47

*AUTOCAD

REV.	ZONE	ECN NO.	DATE	BY	CKR	APP.

Bill Venegas, BNL 6/16/2003 9:25 AM 8549_47.1.dwg

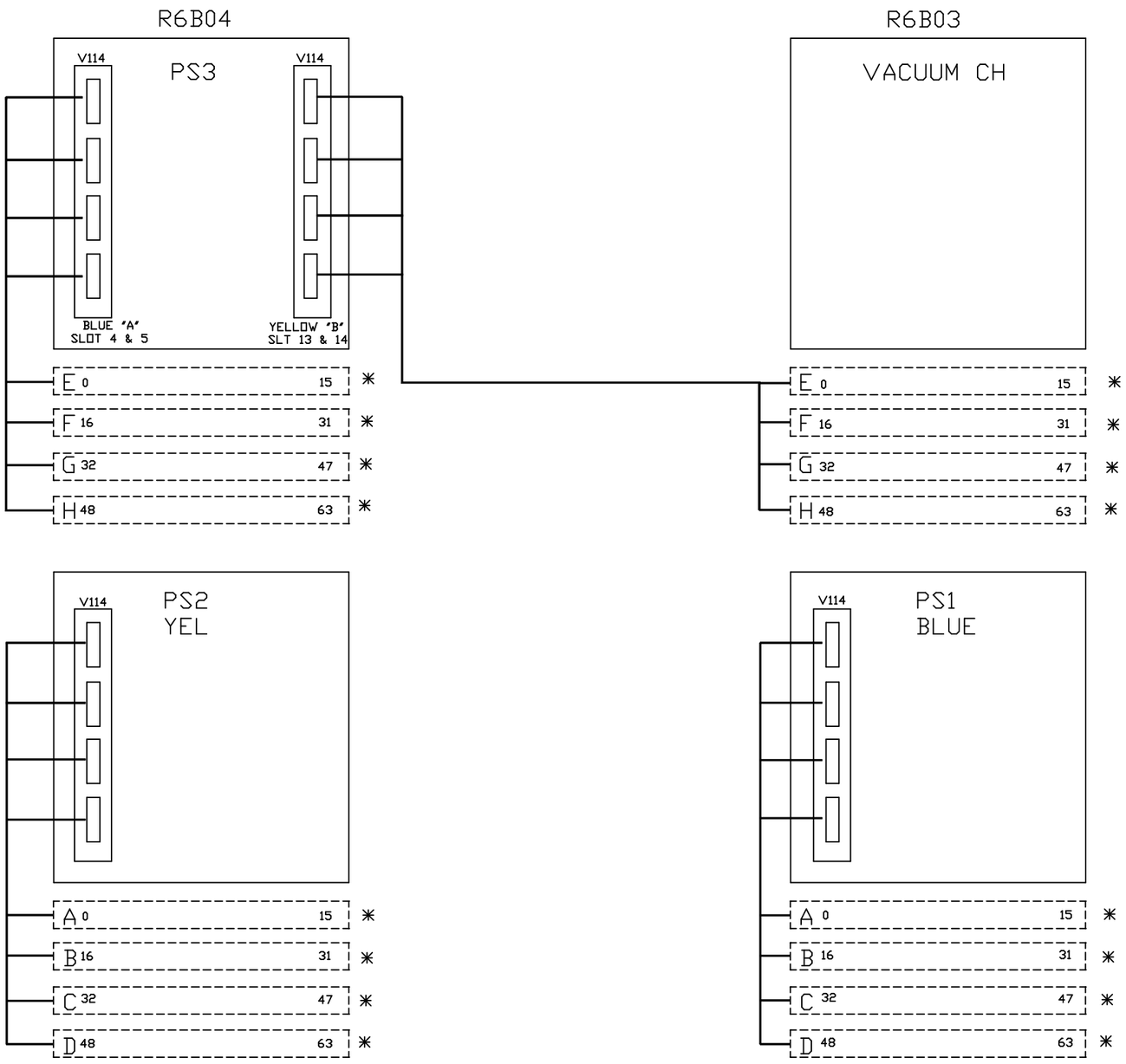

FRONT VIEW

* MOUNTED IN REAR

-3	-2	-1	REF DESIGNATOR	ITEM NO.	DESCRIPTION	MAT'L DWG NO.,BNL NO.
QTY REQD						

INTERPRET IN GENERAL ACCORDANCE WITH ASME Y14.24M-1989	Q.A. CATEGORY A-3	DATE	BROOKHAVEN NATIONAL LABORATORY
	DRAWN BY Venegas	6/13/03	UPTON, N.Y. 11973
UNLESS OTHERWISE SPECIFIED DIMENSIONS ARE IN INCHES	CHECKED BY		RHIC CONTROLS WIRING DIAGRAM
DECIMAL TOLERANCES .X ±.030 .XX ±.015 .XXX ±.005 ANGULAR TOLERANCE ± .5°	DESIGN APPROVAL		BLDG 1006BA , R6B03 & R6B04
	ENGINEER APPROVAL		MADC PANEL LAYOUT
	SUPVR. APPROVAL		SIZE D / DRAWING NUMBER / REV. A
OUTSTANDING ECN	NA FINISH	BREAK SHARP EDGES MAX. XX MIN. XX	NEXT ASSEMBLY
			MATERIAL: ——— SCALE: FULL WEIGHT: – SHEET 47.1

*AUTOCAD

REV.	ZONE	ECN NO.	DATE	BY	CKR	APP.

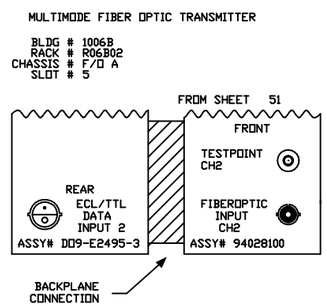

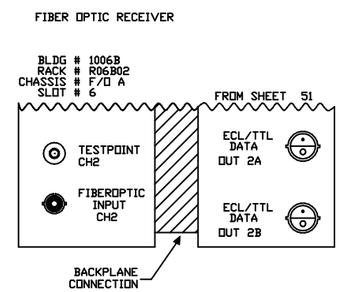

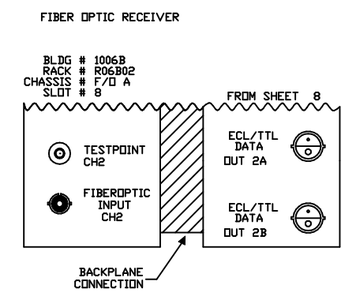

-3	-2	-1	REF DESIGNATOR	ITEM NO.	DESCRIPTION	MAT'L. DWG NO.,SPEC. NO.
QTY REQD						

INTERPRET IN GENERAL ACCORDANCE WITH ASME Y14.24M-1989

UNLESS OTHERWISE SPECIFIED DIMENSIONS ARE IN INCHES

DECIMAL TOLERANCES
.X ±.030
.XX ±.015
.XXX ±.005
ANGULAR TOLERANCE
± .5°

NA FINISH

BREAK SHARP EDGES
MAX. XX MIN. XX

OUTSTANDING ECN

Q.A. CATEGORY A-3		DATE
DRAWN BY	Ed Koropsak	6/3/98
CHECKED BY		
DESIGN APPROVAL		
ENGINEER APPROVAL	R. MICHNOFF	6/3/98
SUPVR. APPROVAL		
NEXT ASSEMBLY		

BROOKHAVEN NATIONAL LABORATORY
UPTON, N.Y. 11973

RHIC CONTROLS WIRING DIAGRAM
SERVICE BLDG. 1006B
SPARE F/O RCVR/XMIT CHANNELS

SIZE D | DRAWING NUMBER 94028549 | REV. A

MATERIAL: ——— SCALE: NA WEIGHT: – SHEET 48 OF 52

*AUTOCAD

REV.	ZONE	ECN NO.	DATE	BY	CKR	APP.

Bill Venegas, BNL 6/20/2003 10:22 AM 8549_49.dwg

V102 DELAY MODULE

BLDG #: 1006B
RACK #: R06B04
CHASSIS ID: CFE-6B-PS2
SLOT #: 20
A16 BASE ADDRESS: E600

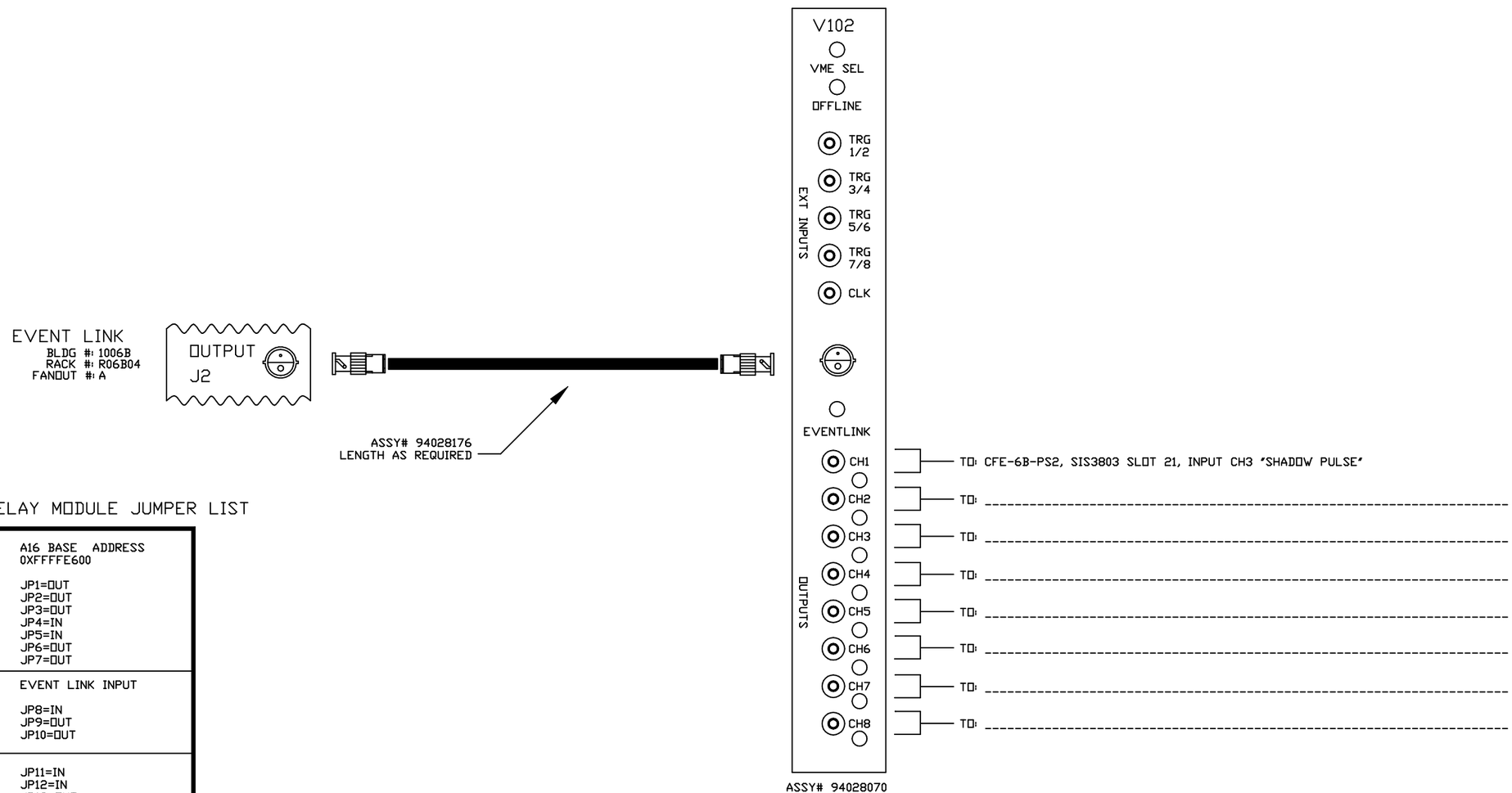

V102 DELAY MODULE JUMPER LIST

A16 BASE ADDRESS 0XFFFFE600 JP1=OUT JP2=OUT JP3=OUT JP4=IN JP5=IN JP6=OUT JP7=OUT
EVENT LINK INPUT JP8=IN JP9=OUT JP10=OUT
JP11=IN JP12=IN JP13=OUT JP14=IN

-3	-2	-1	REF DESIGNATOR	ITEM NO.	DESCRIPTION	MAT'L DWG NO./BNL NO.
QTY REQD						

INTERPRET IN GENERAL ACCORDANCE WITH ASME Y14.24M-1989
UNLESS OTHERWISE SPECIFIED DIMENSIONS ARE IN INCHES
DECIMAL TOLERANCES .X ±.030 .XX ±.015 .XXX ±.005
ANGULAR TOLERANCE ± .5°
FINISH NA
BREAK SHARP EDGES MAX. XX MIN. XX
OUTSTANDING ECN

Q.A. CATEGORY A-3	DATE	
DRAWN BY Venegas	6/19/03	
CHECKED BY		
DESIGN APPROVAL		
ENGINEER APPROVAL		
SUPVR. APPROVAL		
NEXT ASSEMBLY		

BROOKHAVEN NATIONAL LABORATORY
UPTON, N.Y. 11973
RHIC CONTROLS WIRING DIAGRAM
BLDG. 1006B CHASSIS CFE-6B-PS2
V102 DELAY MODULE

SIZE D | DRAWING NUMBER 94028549 | REV. A
MATERIAL: ——— | SCALE: NA | WEIGHT: – | SHEET 49

*AUTOCAD

Bill Venegas, BNL 6/20/2003 10:56 AM 8549_50.dwg

DX Heater PS MADC Readbacks

MADC MUX A/D IO PANEL

BLDG #: 1006B
RACK #: R06B04
PANEL #: MADC A/D IO PANEL H

FR SHEET X

- J1 — CHAN 49, POWER SUPPLY 1006B-5-1-A2, VOLTAGE, g5-dxh-hta
- J2 — CHAN 50, POWER SUPPLY 1006B-5-1-A2, CURRENT, g5-dxh-hta
- J3 — CHAN 51, POWER SUPPLY 1006B-5-1-A2, GND CURRENT, g5-dxh-hta

TO SHEET 50

MADC MUX A/D IO PANEL

BLDG #: 1006B
RACK #: R06B04
PANEL #: MADC A/D IO PANEL H

FR SHEET 50

- J7 — CHAN 55, POWER SUPPLY 1006B-6-1-A1, VOLTAGE, g6-dxh-hta
- J8 — CHAN 56, POWER SUPPLY 1006B-6-1-A1, CURRENT, g6-dxh-hta
- J9 — CHAN 57, POWER SUPPLY 1006B-6-1-A1, GND CURRENT, g6-dxh-hta

TO SHEET 50

MADC MUX A/D IO PANEL

BLDG #: 1006B
RACK #: R06B04
PANEL #: MADC A/D IO PANEL H

FR SHEET 50

- J4 — CHAN 52, POWER SUPPLY 1006B-5-2-B2, VOLTAGE, g5-dxh-htb
- J5 — CHAN 53, POWER SUPPLY 1006B-5-2-B2, CURRENT, g5-dxh-htb
- J6 — CHAN 54, POWER SUPPLY 1006B-5-2-B2, GND CURRENT, g5-dxh-htb

TO SHEET 50

MADC MUX A/D IO PANEL

BLDG #: 1006B
RACK #: R06B04
PANEL #: MADC A/D IO PANEL H

FR SHEET 50

- J10 — CHAN 58, POWER SUPPLY 1006B-6-2-B1, VOLTAGE, g6-dxh-htb
- J11 — CHAN 59, POWER SUPPLY 1006B-6-2-B1, CURRENT, g6-dxh-htb
- J12 — CHAN 60, POWER SUPPLY 1006B-6-2-B1, GND CURRENT, g6-dxh-htb

TO SHEET X

REV.	ZONE	ECN NO.	DATE	BY	CKR	APP.

-3	-2	-1	REF DESIGNATOR	ITEM NO.	DESCRIPTION	MAT'L. DWG NO.,SPEC. NO.
QTY REQD						

INTERPRET IN GENERAL ACCORDANCE WITH ASME Y14.24M-1989
UNLESS OTHERWISE SPECIFIED DIMENSIONS ARE IN INCHES
DECIMAL TOLERANCES .X ±.030 .XX ±.015 .XXX ±.005
ANGULAR TOLERANCE ± .5°
NA FINISH
BREAK SHARP EDGES MAX. XX MIN. XX
OUTSTANDING ECN

Q.A. CATEGORY A-3
DRAWN BY Venegas 6/20/03
CHECKED BY
DESIGN APPROVAL
ENGINEER APPROVAL
SUPVR. APPROVAL
NEXT ASSEMBLY

BROOKHAVEN NATIONAL LABORATORY
UPTON, N.Y. 11973
RHIC CONTROLS WIRING DIAGRAM
BLDG. 1006B CHASSIS CFE-6B-PS2
DX HEATER PS MADC READBACKS

SIZE D
94028549
DRAWING NUMBER
REV. A
MATERIAL: ——— SCALE: NA WEIGHT: – SHEET 50

*AUTOCAD

Controls 9/8/99 2:09 PM 8549_51.dwg

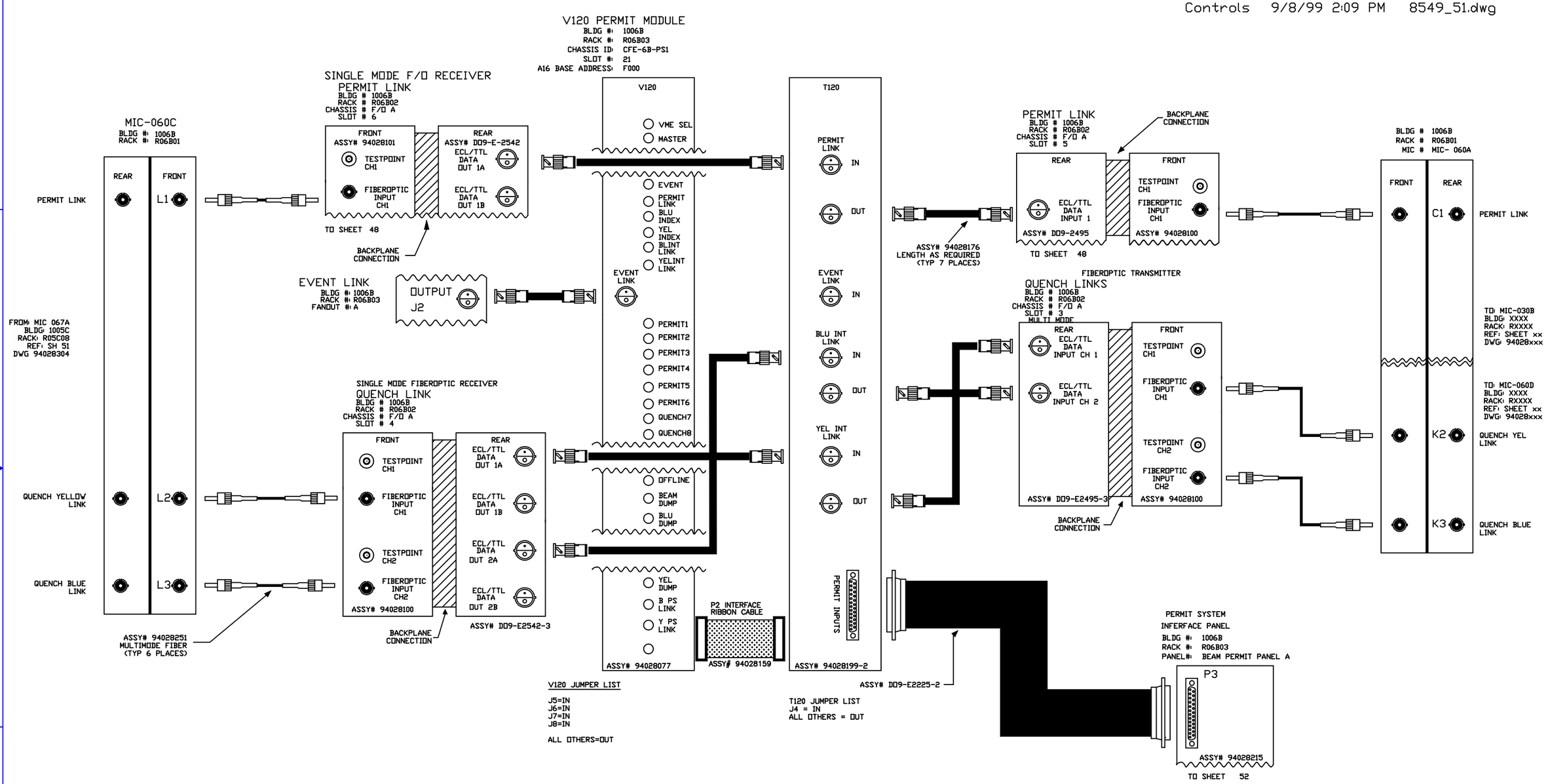

-3	-2	-1	REF DESIGNATOR	ITEM NO.	DESCRIPTION	MAT'L. DWG NO./INL NO.
QTY REQD						

INTERPRET IN GENERAL ACCORDANCE WITH ASME Y14.24M-1989

UNLESS OTHERWISE SPECIFIED DIMENSIONS ARE IN INCHES

DECIMAL TOLERANCES
X ±.030
.XX ±.015
.XXX ±.005
ANGULAR TOLERANCE ± .5°

NA FINISH

BREAK SHARP EDGES MAX. XX MIN. XX

OUTSTANDING ECN

Q.A. CATEGORY A-3

		DATE
DRAWN BY	Ed Koropsak	6/4/98
CHECKED BY		
DESIGN APPROVAL		
ENGINEER APPROVAL	R. MICHNOFF	6/4/98
SUPVR. APPROVAL		

NEXT ASSEMBLY

BROOKHAVEN NATIONAL LABORATORY
UPTON, N.Y. 11973

RHIC CONTROLS WIRING DIAGRAM

SERVIVE BLDG. 1006B, CHASSIS CFE-6B-PS2

V120/T120 PERMIT SYSTEM

SIZE D — DRAWING NUMBER 94028549 — REV. A

MATERIAL: ——— SCALE: NA WEIGHT: – SHEET 51OF 52

1 *AUTOCAD

REV.	ZONE	ECN NO.	DATE	BY	CKR	APP.

CONTROLS- 1/2/02 11:22 AM 8549_52.dwg

PERMIT SYSTEM INTERFACE MODULE

BLDG #: 1006B
RACK #: R06B03
PANEL #: PERMIT I/F PANEL A

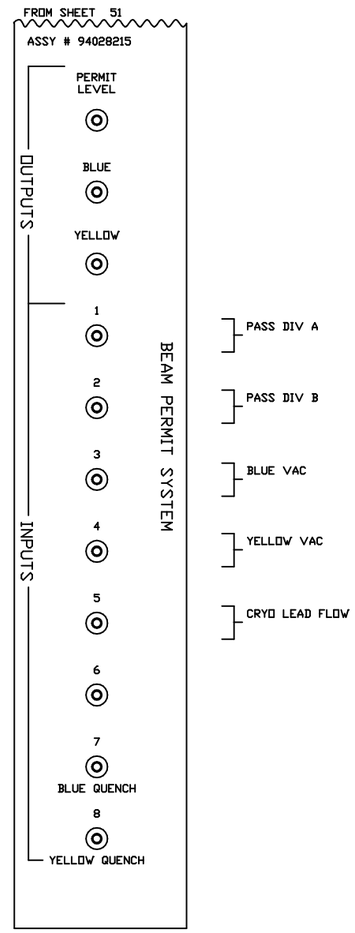

-3	-2	-1	REF DESIGNATOR	ITEM NO.	DESCRIPTION	MAT'L DWG NO.,BNL NO.
QTY REQD						

INTERPRET IN GENERAL ACCORDANCE WITH ASME Y14.24M-1989

UNLESS OTHERWISE SPECIFIED DIMENSIONS ARE IN INCHES

DECIMAL TOLERANCES
.X ±.030
.XX ±.015
.XXX ±.005
ANGULAR TOLERANCE
± .5°

NA FINISH

BREAK SHARP EDGES
MAX. XX MIN. XX

OUTSTANDING ECN

Q.A. CATEGORY A-3		DATE
DRAWN BY	Ed Koropsak	6/4/98
CHECKED BY		
DESIGN APPROVAL		
ENGINEER APPROVAL	R. MICHNOFF	6/4/98
SUPVR. APPROVAL		

NEXT ASSEMBLY

BROOKHAVEN NATIONAL LABORATORY
UPTON, N.Y. 11973

RHIC CONTROLS WIRING DIAGRAM
BLDG. 1006B, RACK R06B03
PERMIT SYSTEM INTERFACE PANEL

SIZE D | DRAWING NUMBER 94028549 | REV. A

MATERIAL: ——— SCALE: NA WEIGHT: – SHEET 52 OF 52

*AUTOCAD

REV.	ZONE	ECN NO.	DATE	BY	CKR	APP.

Bill Venegas, BNL 6/16/2003 1:13 PM 8549_60.dwg

FRONT END COMPUTER
BLDG #: 1006B
RACK #: R06B04
CHASSIS ID: CFE-6B-PS3
SLOT#: 1
FEC NAME: cfe-6b-ps3

ETHERNET NETWORK

REF. NETWORK DIAGRAM

DEVICE: MEMORY BOARD
BLDG #: 1006B
RACK #: R06B04
CHASSIS ID: CFE-6B-PS3
SLOT #: 2
A24 BASE ADDRESS:

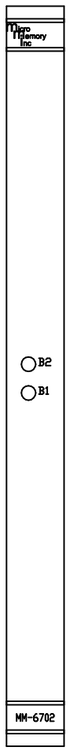

JUMPER LIST
1. REMOVE E1.
2. INSTALL E15.
3. SW3 CLOSE ALL POSITIONS.
4. SW2 CLOSE POSITIONS 7 AND 8.
5. SW1 CLOSE POSITIONS 2-8.
6. INSTALL E14 AND E25 TO ENABLE BATTERIES

DEVICE: V108 UTILITY MODULE
BLDG #: 1006B
RACK #: R06B04
CHASSIS ID: CFE-6B-PS3
SLOT #: 3
A24 BASE ADDRESS: 004000

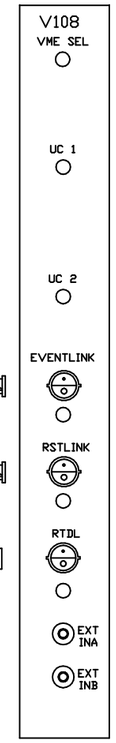

ASSY# 94028094

EVENT LINK
BLDG #: 1006B
RACK #: R06B02
FANOUT #: A

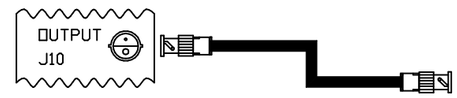

RESET LINK
BLDG #: 1006B
RACK #: R06B02
FANOUT #: C

REAL TIME DATA LINK
BLDG #: 1006B
RACK #: R06B02
FANOUT #: B

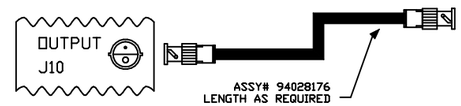

ASSY# 94028176
LENGTH AS REQUIRED
(TYP 3 PLACES)

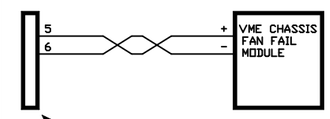

CONNECT TO P2 PINS
ON REAR OF VME CHASSIS
CABLE & CONNECTOR SUPPLIED
WITH VME CHASSIS

JUMPER LIST

E25 through E50 are configured for remote reset address
at the time of board acceptance test.
DO NOT MODIFY!

Remote reset pulls VME SYS Reset.
E58-E60, E59-E61

A24 BASE ADDRESS= 4000h
E57-E13, E2-E14, E3-E15, E4-E16, E5-E17, E6-E18
E7-E19, E8-E20, E9-E21, E10-E22, E11-E24, E57-E23
SW1=OPEN
SW2=CLOSED
SW3=OPEN
SW4=OPEN

HIGH BAY
ROOM
TEMP
SENSOR

POWER FROM
EXTERNAL
POWER SUPPLY

+24 V
GND

MADC MUX A/D IO PANEL
BLDG #: 1006B
RACK #: R06B03
PANEL #: MADC A/D IO PANEL H

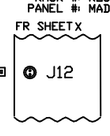

CHAN 60
HIGH BAY TEMP

ROOM
TEMP
SENSOR

POWER FROM
BUFFERED MADC
POWER SUPPLY

+24 V
GND

MADC MUX A/D IO PANEL
BLDG #: 1006B
RACK #: R06B03
PANEL #: MADC A/D IO PANEL H

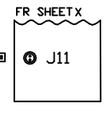

CHAN 59
CONTROL ROOM TEMP

-3	-2	-1	REF DESIGNATOR	ITEM NO.	DESCRIPTION	MAT'L. DWG NO.,BNL NO.
QTY REQD						

INTERPRET IN GENERAL ACCORDANCE WITH ASME Y14.24M-1989
UNLESS OTHERWISE SPECIFIED DIMENSIONS ARE IN INCHES
DECIMAL TOLERANCES .X ±.030 .XX ±.015 .XXX ±.005
ANGULAR TOLERANCE ± .5°
FINISH NA
BREAK SHARP EDGES MAX. XX MIN. XX
OUTSTANDING ECN

Q.A. CATEGORY A-3
DRAWN BY Venegas DATE 6/16/03
CHECKED BY
DESIGN APPROVAL
ENGINEER APPROVAL
SUPVR. APPROVAL
NEXT ASSEMBLY

BROOKHAVEN NATIONAL LABORATORY
UPTON, N.Y. 11973
RHIC CONTROLS WIRING DIAGRAM
1006B, VME CHASSIS CFE-6B-PS3
FT END COMP/V108 UTIL MODULE

SIZE D
DRAWING NUMBER 94028549
REV. A
MATERIAL: ——— SCALE: NA WEIGHT: — SHEET 60

1 *AUTOCAD

REV.	ZONE	ECN NO.	DATE	BY	CKR	APP.

Bill Venegas, BNL 6/23/2003 10:20 AM 8549_61.dwg

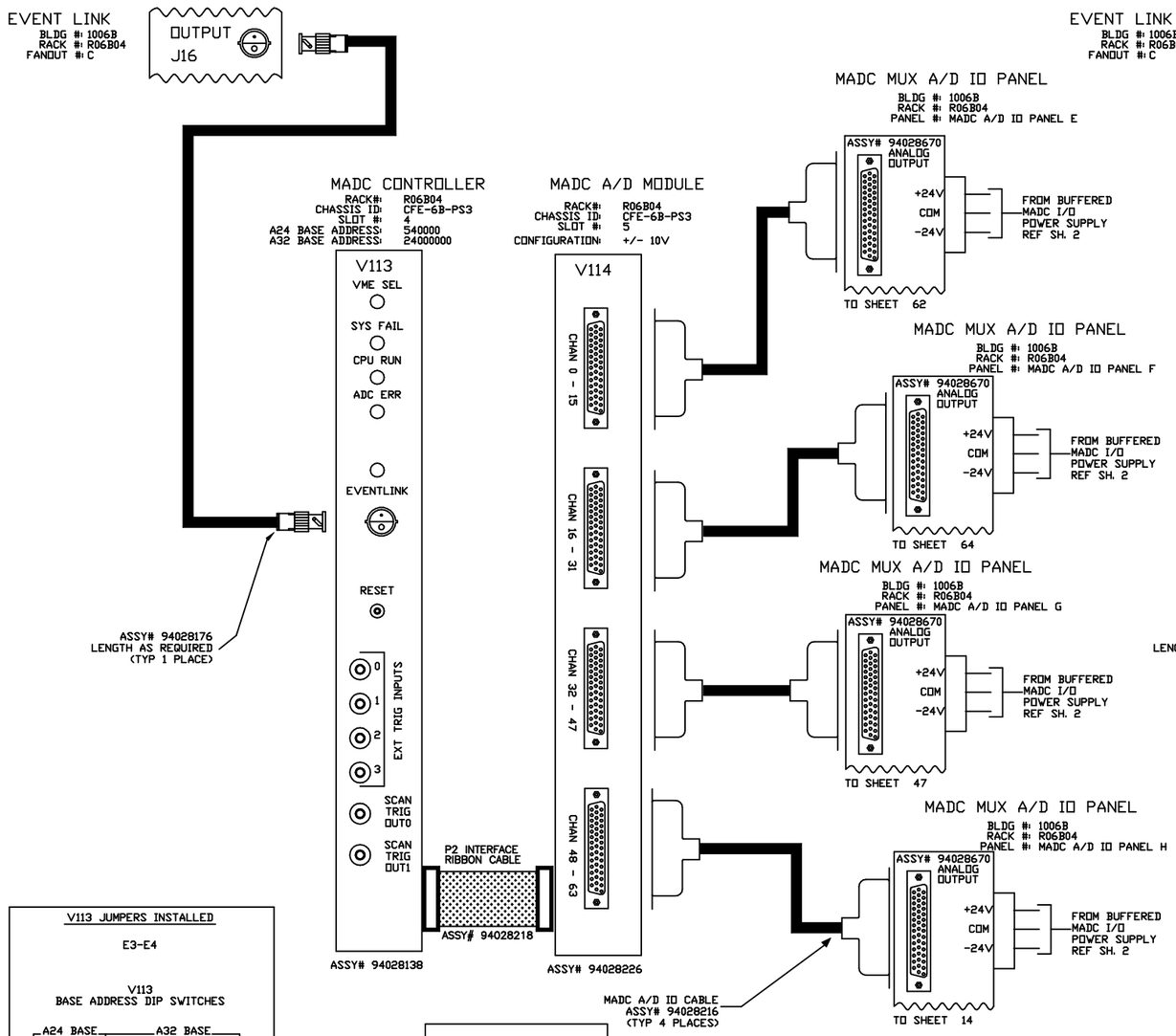

V113 JUMPERS INSTALLED

E3-E4

V113
BASE ADDRESS DIP SWITCHES

A24 BASE: A18 A19 A20 A21 A22 A23 A22 A23 — SW1
A32 BASE: A24 A25 A26 A27 A28 A29 A30 A31 — SW2

PUSH SWITCH IN DIRECTION SHOWN

V114 JUMPERS INSTALLED

J1, J2, J4, J5, J9
J19, J15, J21

ALL OTHER JUMPERS OUT

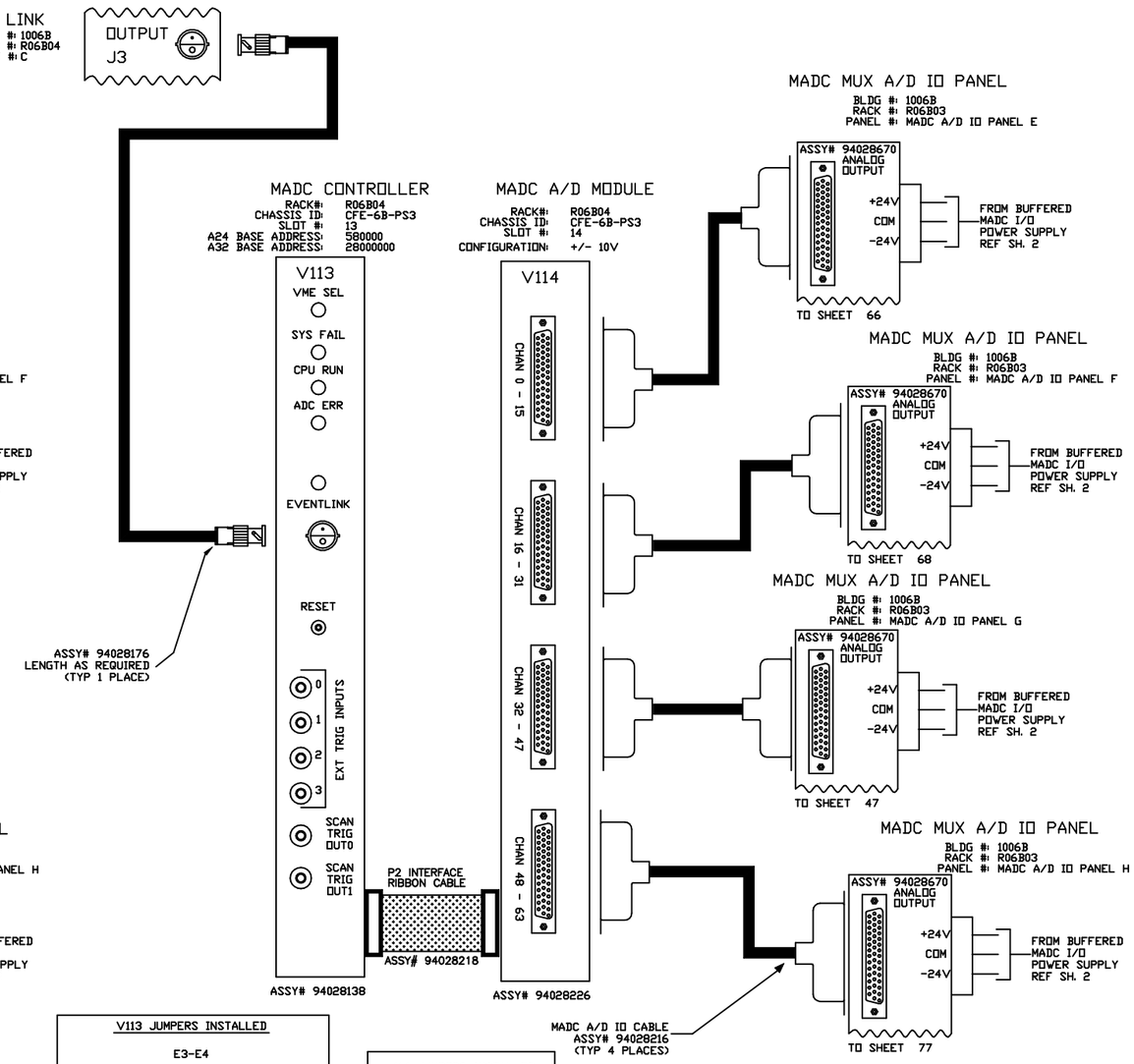

V113 JUMPERS INSTALLED

E3-E4

V113
BASE ADDRESS DIP SWITCHES

A24 BASE: A18 A19 A20 A21 A22 A23 A22 A23 — SW1
A32 BASE: A24 A25 A26 A27 A28 A29 A30 A31 — SW2

PUSH SWITCH IN DIRECTION SHOWN

V114 JUMPERS INSTALLED

J1, J2, J4, J5, J9
J19, J15, J21

ALL OTHER JUMPERS OUT

-3	-2	-1	REF DESIGNATOR	ITEM NO.	DESCRIPTION	MAT'L DWG NO./BNL NO.
QTY REQD						

INTERPRET IN GENERAL ACCORDANCE WITH ASME Y14.24M-1989	Q.A. CATEGORY A-3	DATE	BROOKHAVEN NATIONAL LABORATORY
	DRAWN BY Venegas	6/16/03	UPTON, N.Y. 11973
UNLESS OTHERWISE SPECIFIED DIMENSIONS ARE IN INCHES	CHECKED BY		RHIC CONTROLS WIRING DIAGRAM
DECIMAL TOLERANCES .X ±.030 .XX ±.015 .XXX ±.005 ANGULAR TOLERANCE ± .5°	DESIGN APPROVAL		1006B, VME CHASSIS CFE-6B-PS3
	ENGINEER APPROVAL		MADC SYSTEM
	SUPVR. APPROVAL		SIZE D — 94028549 — REV. A
OUTSTANDING ECN	NA FINISH	BREAK SHARP EDGES MAX. XX MIN. XX	NEXT ASSEMBLY — DRAWING NUMBER
			MATERIAL: — SCALE: FULL WEIGHT: – SHEET 61

*AUTOCAD

REV.	ZONE	ECN NO.	DATE	BY	CKR	APP.

Bill Venegas, BNL 6/17/2003 10:43 AM 8549_62.dwg

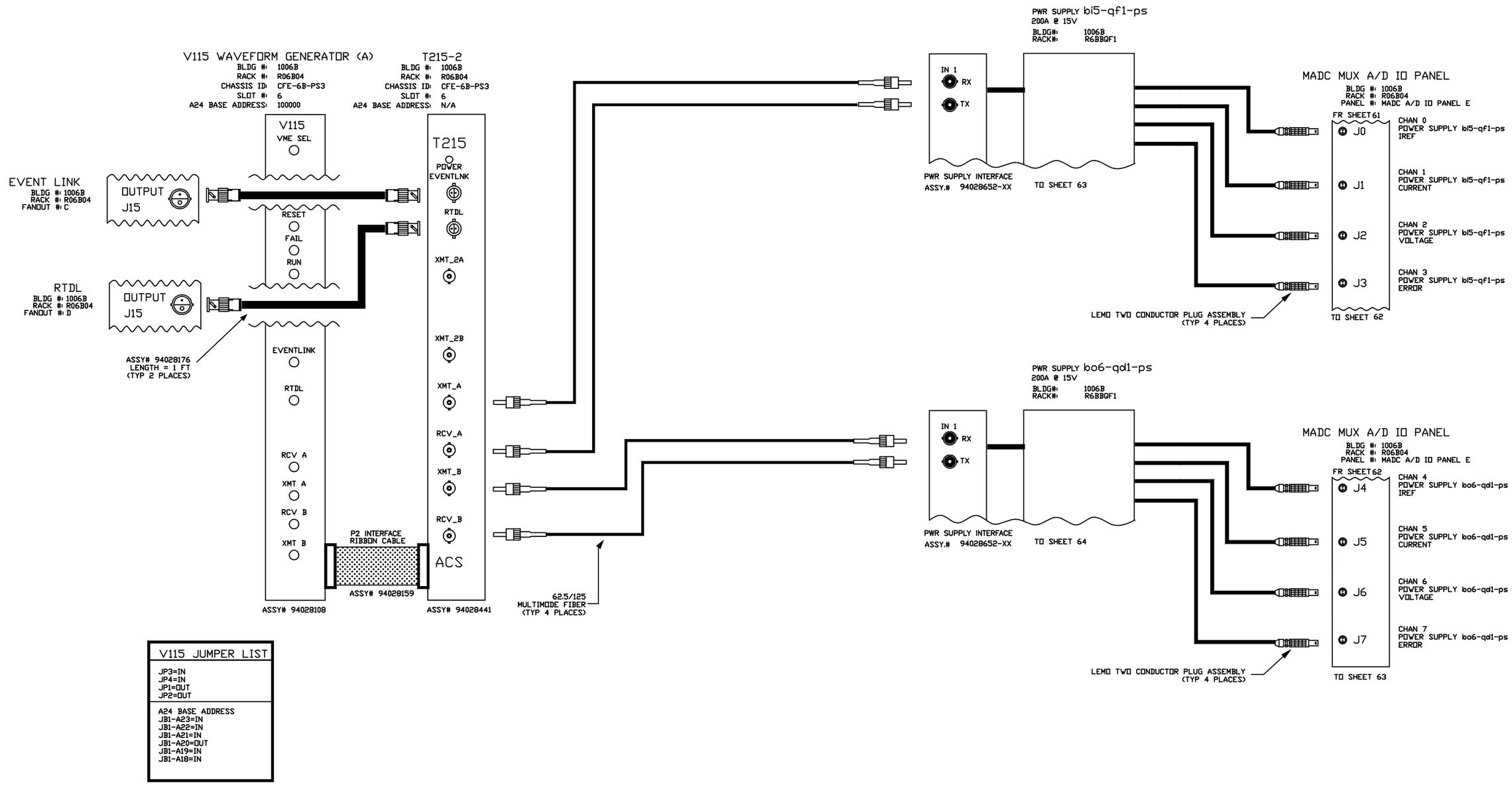

V115 JUMPER LIST
JP3=IN JP4=IN JP1=OUT JP2=OUT
A24 BASE ADDRESS JB1-A23=IN JB1-A22=IN JB1-A21=IN JB1-A20=OUT JB1-A19=IN JB1-A18=IN

-3	-2	-1	REF DESIGNATOR	ITEM NO.	DESCRIPTION	MAT'L DWG NO./BNL NO.
QTY REQD						

INTERPRET IN GENERAL ACCORDANCE WITH ASME Y14.24M-1989

UNLESS OTHERWISE SPECIFIED DIMENSIONS ARE IN INCHES

DECIMAL TOLERANCES
.X ±.030
.XX ±.015
.XXX ±.005
ANGULAR TOLERANCE
± .5°

NA FINISH

BREAK SHARP EDGES
MAX. XX MIN. XX

OUTSTANDING ECN

Q.A. CATEGORY A-3

		DATE
DRAWN BY	Venegas	6/17/98
CHECKED BY		
DESIGN APPROVAL		
ENGINEER APPROVAL		
SUPVR. APPROVAL		

NEXT ASSEMBLY

BROOKHAVEN NATIONAL LABORATORY
UPTON, N.Y. 11973

RHIC CONTROLS WIRING DIAGRAM

BLDG. 1006B, CFE-6B-PS3

bi5-qf1-ps/bo6-qd1-ps

SIZE D | 94028549 | REV. A

DRAWING NUMBER

MATERIAL: ——— SCALE: NA WEIGHT: – SHEET 62

1 *AUTOCAD

REV.	ZONE	ECN NO.	DATE	BY	CKR	APP.

Bill Venegas, BNL 6/17/2003 11:04 AM 8549_63.dwg

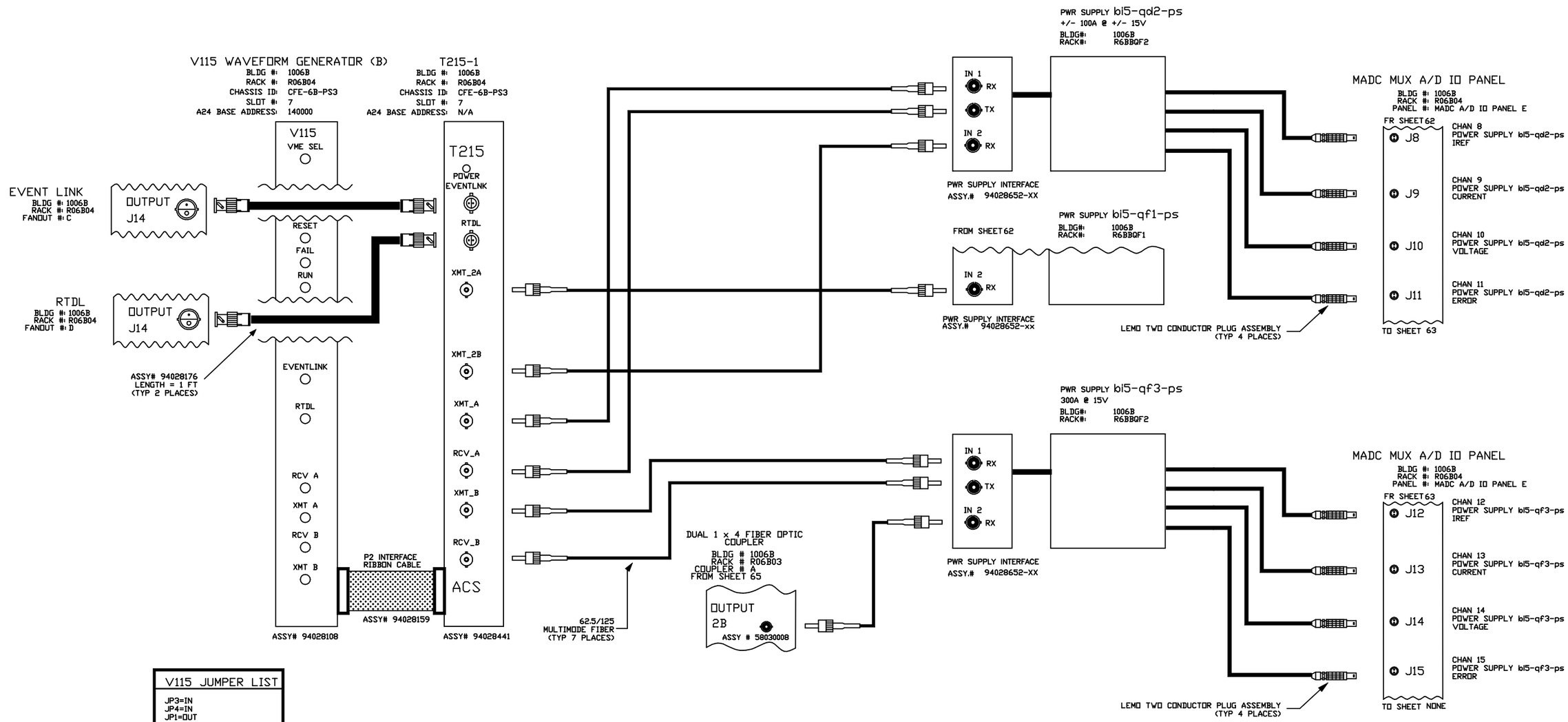

V115 JUMPER LIST
JP3=IN JP4=IN JP1=OUT JP2=OUT
A24 BASE ADDRESS JB1-A23=IN JB1-A22=IN JB1-A21=IN JB1-A20=OUT JB1-A19=IN JB1-A18=OUT

-3	-2	-1	REF DESIGNATOR	ITEM NO.	DESCRIPTION	MAT'L DWG NO.,BNL NO.
QTY REQD						

INTERPRET IN GENERAL ACCORDANCE WITH ASME Y14.24M-1989

UNLESS OTHERWISE SPECIFIED DIMENSIONS ARE IN INCHES

DECIMAL TOLERANCES
.X ±.030
.XX ±.015
.XXX ±.005
ANGULAR TOLERANCE
± .5°

OUTSTANDING ECN

NA FINISH

BREAK SHARP EDGES
MAX. XX MIN. XX

Q.A. CATEGORY A-3

		DATE
DRAWN BY	Venegas	6/17/03
CHECKED BY		
DESIGN APPROVAL		
ENGINEER APPROVAL		
SUPVR. APPROVAL		

NEXT ASSEMBLY

BROOKHAVEN NATIONAL LABORATORY
UPTON, N.Y. 11973

RHIC CONTROLS WIRING DIAGRAM
BLDG. 1006B, CFE-6B-PS3
bi5-qd2-ps/bi5-qf3-ps

SIZE D | DRAWING NUMBER 94028549 | REV. A

MATERIAL: ——— SCALE: NA WEIGHT: – SHEET 63

1 *AUTOCAD

REV.	ZONE	ECN NO.	DATE	BY	CKR	APP.

Bill Venegas, BNL 6/17/2003 11:06 AM 8549_64.dwg

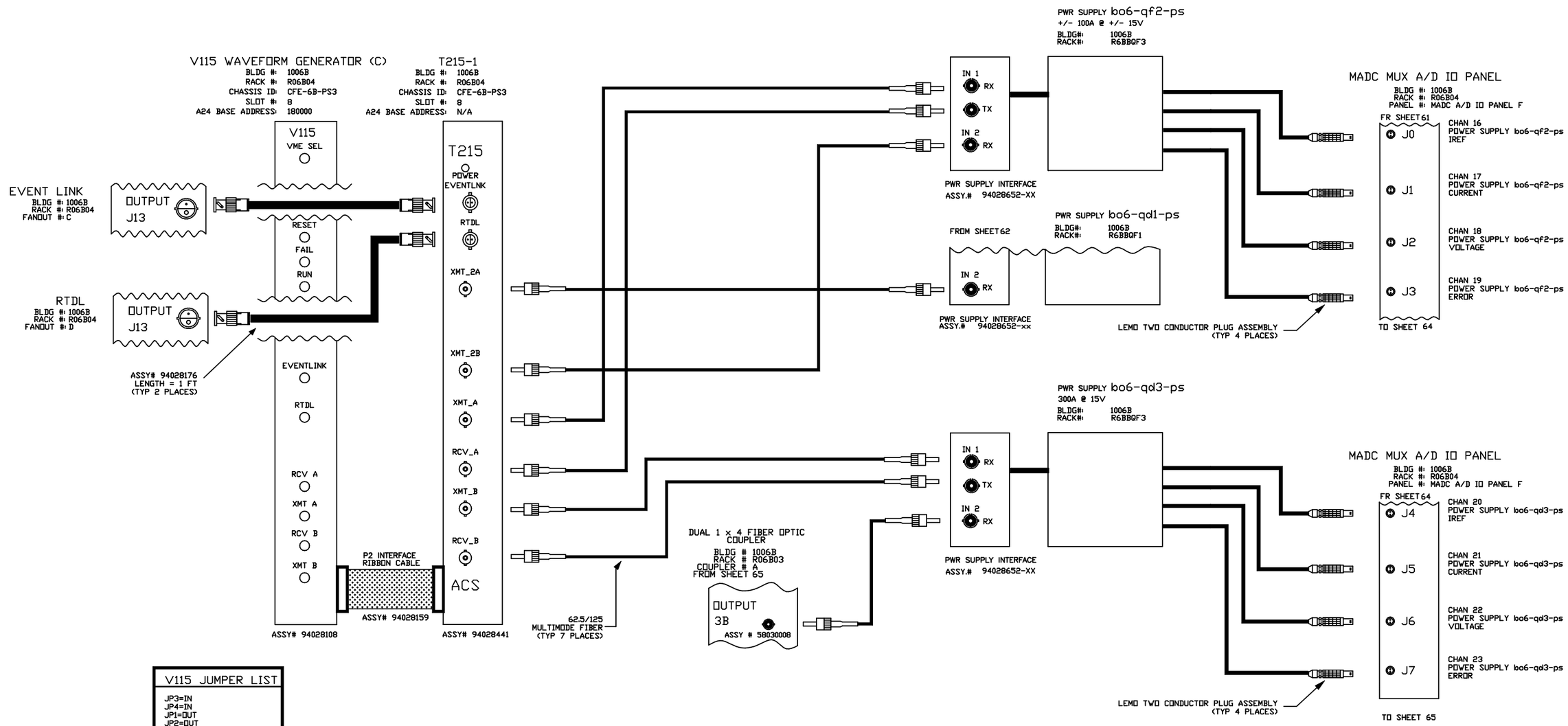

V115 JUMPER LIST
JP3=IN JP4=IN JP1=OUT JP2=OUT
A24 BASE ADDRESS JB1-A23=IN JB1-A22=IN JB1-A21=IN JB1-A20=OUT JB1-A19=OUT JB1-A18=IN

-3	-2	-1	REF DESIGNATOR	ITEM NO.	DESCRIPTION	MAT'L. DWG NO./INL NO.
QTY REQD						

INTERPRET IN GENERAL ACCORDANCE WITH ASME Y14.24M-1989

UNLESS OTHERWISE SPECIFIED DIMENSIONS ARE IN INCHES
DECIMAL TOLERANCES .X ±.030 .XX ±.015 .XXX ±.005
ANGULAR TOLERANCE ± .5°

OUTSTANDING ECN

NA FINISH

BREAK SHARP EDGES MAX. XX MIN. XX

Q.A. CATEGORY A-3

		DATE
DRAWN BY	Venegas	6/17/03
CHECKED BY		
DESIGN APPROVAL		
ENGINEER APPROVAL		
SUPVR. APPROVAL		

NEXT ASSEMBLY

BROOKHAVEN NATIONAL LABORATORY
UPTON, N.Y. 11973

RHIC CONTROLS WIRING DIAGRAM
BLDG. 1006B, CFE-6B-PS3
bo6-qf2-ps/bo6-qd3-ps

SIZE D | DRAWING NUMBER 94028549 | REV. A

MATERIAL: ——— SCALE: NA WEIGHT: – SHEET 64

*AUTOCAD

REV.	ZONE	ECN NO.	DATE	BY	CKR	APP.

Bill Venegas, BNL 6/16/2003 3:45 PM 8549_65.dwg

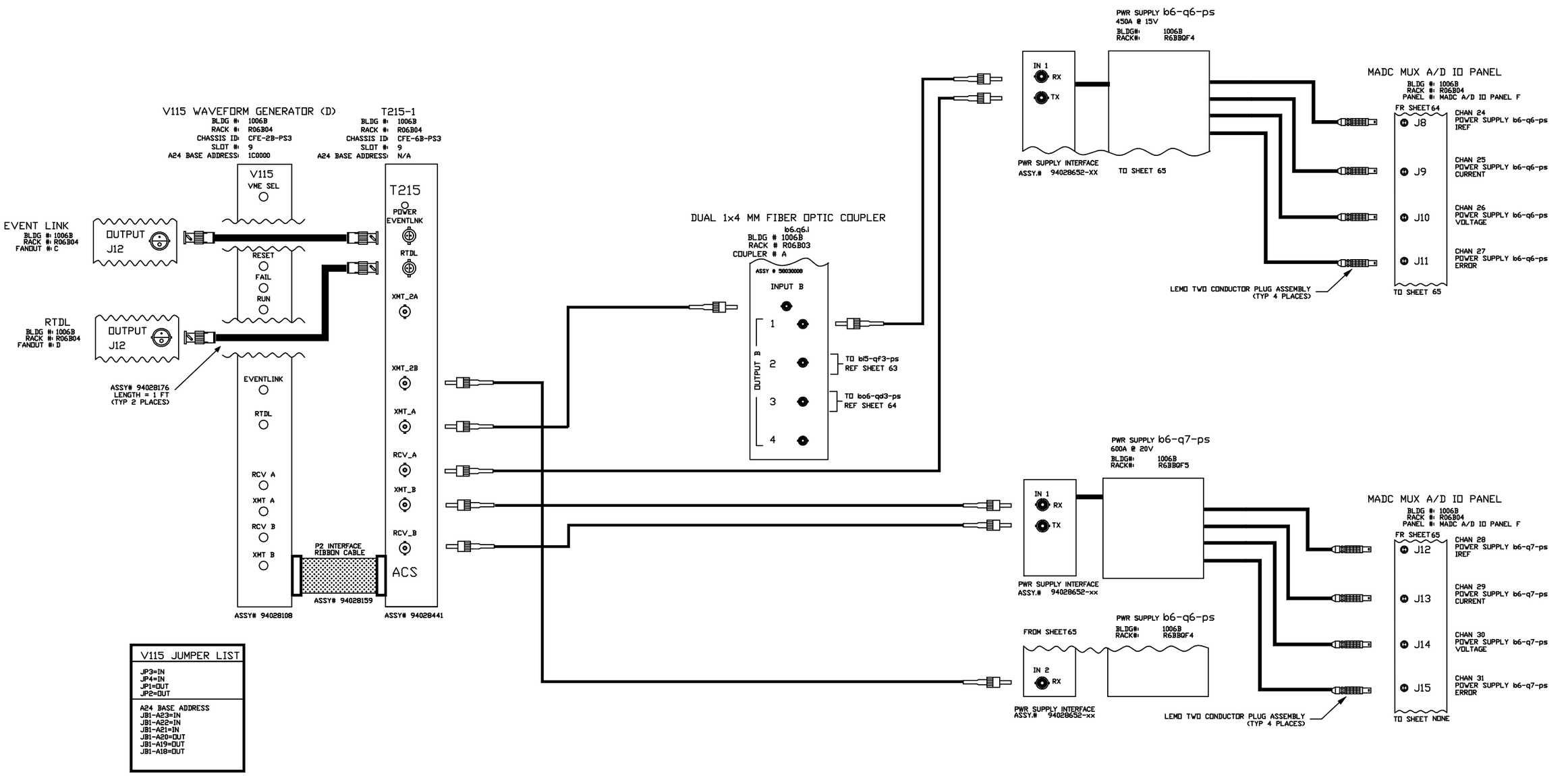

V115 JUMPER LIST

JP3=IN
JP4=IN
JP1=OUT
JP2=OUT

A24 BASE ADDRESS
JB1-A23=IN
JB1-A22=IN
JB1-A21=IN
JB1-A20=OUT
JB1-A19=OUT
JB1-A18=OUT

-3	-2	-1	REF DESIGNATOR	ITEM NO.	DESCRIPTION	MAT'L DWG NO./BNL NO.
QTY REQD						

INTERPRET IN GENERAL ACCORDANCE WITH ASME Y14.24M-1989

UNLESS OTHERWISE SPECIFIED DIMENSIONS ARE IN INCHES

DECIMAL TOLERANCES
.X ±.030
.XX ±.015
.XXX ±.005
ANGULAR TOLERANCE
± .5°

NA FINISH

BREAK SHARP EDGES
MAX. XX MIN. XX

OUTSTANDING ECN

Q.A. CATEGORY A-3

		DATE
DRAWN BY	Venegas	6/16/03
CHECKED BY		
DESIGN APPROVAL		
ENGINEER APPROVAL		
SUPVR. APPROVAL		

NEXT ASSEMBLY

BROOKHAVEN NATIONAL LABORATORY
UPTON, N.Y. 11973

RHIC CONTROLS WIRING DIAGRAM
BLDG. 1006B, CFE-6B-PS3
b6-q7-ps/b6-q6-ps

SIZE D | DRAWING NUMBER 94028549 | REV. A

MATERIAL: ——— SCALE: NA WEIGHT: – SHEET 65

*AUTOCAD

REV.	ZONE	ECN NO.	DATE	BY	CKR	APP.

Bill Venegas, BNL 6/17/2003 3:44 PM 8549_66.dwg

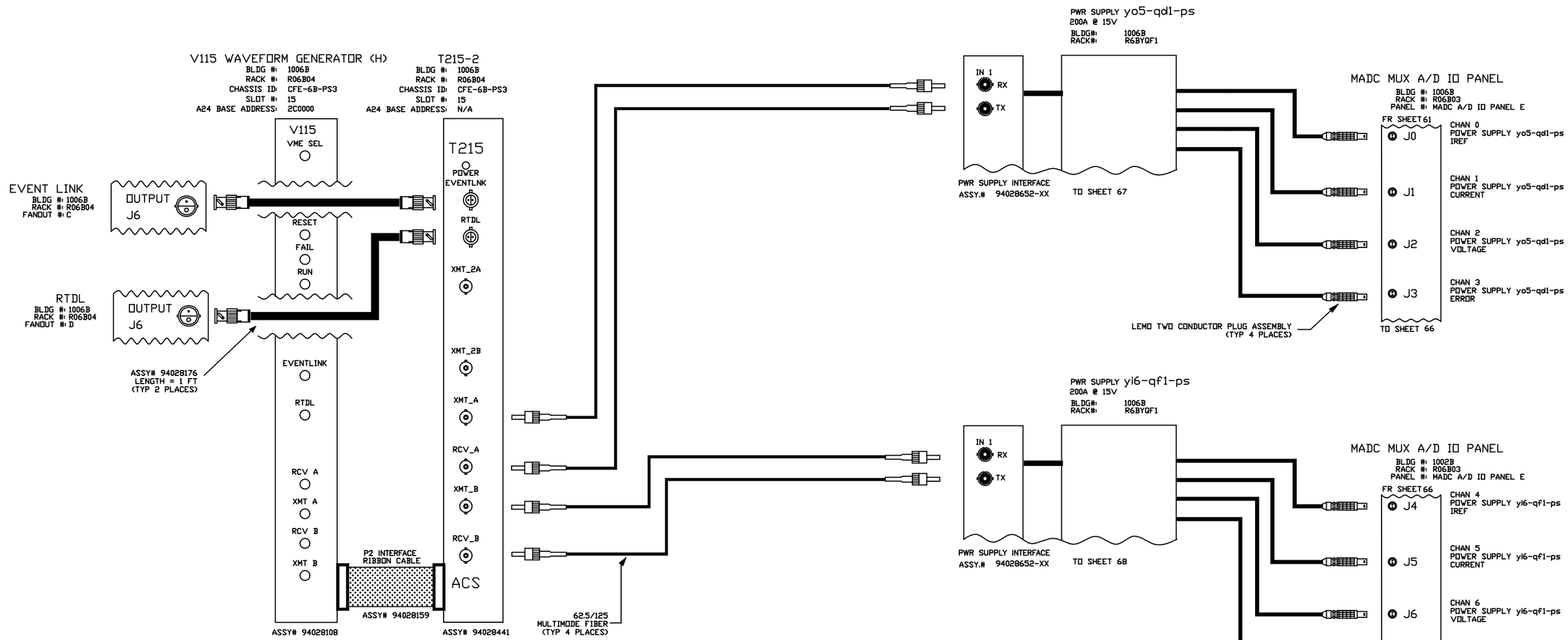

V115 JUMPER LIST
JP3=IN JP4=IN JP1=OUT JP2=OUT
A24 BASE ADDRESS JB1-A23=IN JB1-A22=IN JB1-A21=OUT JB1-A20=IN JB1-A19=OUT JB1-A18=OUT

-3	-2	-1	REF DESIGNATOR	ITEM NO.	DESCRIPTION	MAT'L DWG NO./BNL NO.
QTY REQD						

INTERPRET IN GENERAL ACCORDANCE WITH ASME Y14.24M-1989

UNLESS OTHERWISE SPECIFIED DIMENSIONS ARE IN INCHES

DECIMAL TOLERANCES
.X ±.030
.XX ±.015
.XXX ±.005
ANGULAR TOLERANCE
± .5°

OUTSTANDING ECN

NA FINISH

BREAK SHARP EDGES
MAX. XX MIN. XX

Q.A. CATEGORY A-3		DATE
DRAWN BY	Venegas	6/17/03
CHECKED BY		
DESIGN APPROVAL		
ENGINEER APPROVAL		
SUPVR. APPROVAL		

NEXT ASSEMBLY

BROOKHAVEN NATIONAL LABORATORY
UPTON, N.Y. 11973

RHIC CONTROLS WIRING DIAGRAM
BLDG. 1006B, CFE-6B-PS3
yo5-qd1-ps/yi6-qf1-ps

SIZE D | DRAWING NUMBER 94028549 | REV. A

MATERIAL: ——— SCALE: NA WEIGHT: – SHEET 66

*AUTOCAD

REV.	ZONE	ECN NO.	DATE	BY	CKR	APP.

Bill Venegas, BNL 6/17/2003 3:57 PM 8549_67.dwg

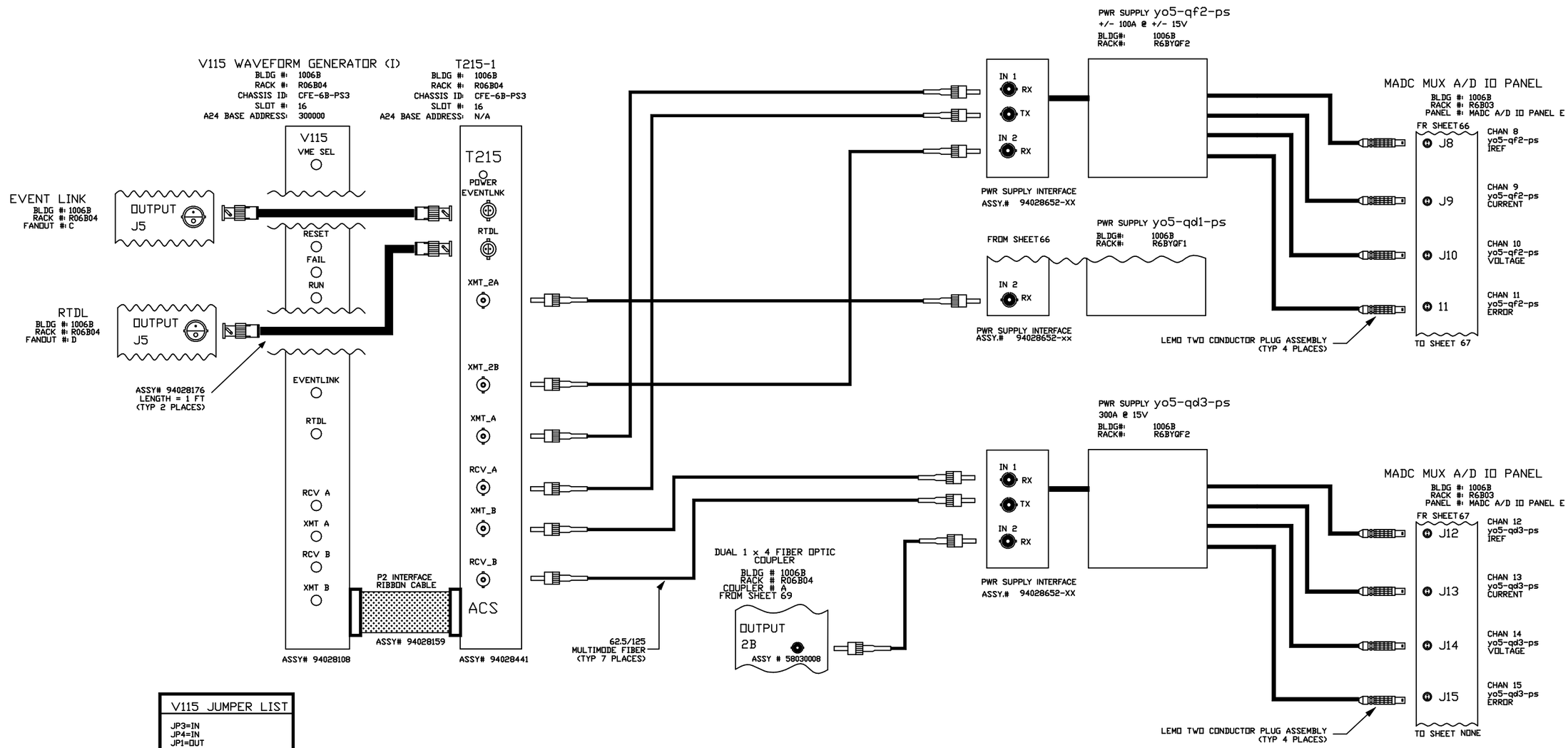

V115 JUMPER LIST
JP3=IN JP4=IN JP1=OUT JP2=OUT
A24 BASE ADDRESS JB1-A23=IN JB1-A22=IN JB1-A21=OUT JB1-A20=OUT JB1-A19=IN JB1-A18=IN

-3	-2	-1	REF DESIGNATOR	ITEM NO.	DESCRIPTION	MAT'L DWG NO.,BNL NO.
QTY REQD						

INTERPRET IN GENERAL ACCORDANCE WITH ASME Y14.24M-1989

UNLESS OTHERWISE SPECIFIED DIMENSIONS ARE IN INCHES
DECIMAL TOLERANCES .X ±.030 .XX ±.015 .XXX ±.005
ANGULAR TOLERANCE ± .5°

OUTSTANDING ECN

NA FINISH

BREAK SHARP EDGES MAX. XX MIN. XX

Q.A. CATEGORY A-3		DATE
DRAWN BY	Venegas	6/17/03
CHECKED BY		
DESIGN APPROVAL		
ENGINEER APPROVAL		
SUPVR. APPROVAL		
NEXT ASSEMBLY		

BROOKHAVEN NATIONAL LABORATORY
UPTON, N.Y. 11973

RHIC CONTROLS WIRING DIAGRAM
BLDG. 1006B, CFE-6B-PS3
yo5-qf2-ps/yo5-qd3-ps

SIZE D | DRAWING NUMBER 94028549 | REV. A

MATERIAL: ——— SCALE: NA WEIGHT: – SHEET 67

*AUTOCAD

REV.	ZONE	ECN NO.	DATE	BY	CKR	APP.

Bill Venegas, BNL 6/18/2003 9:11 AM 8549_68.dwg

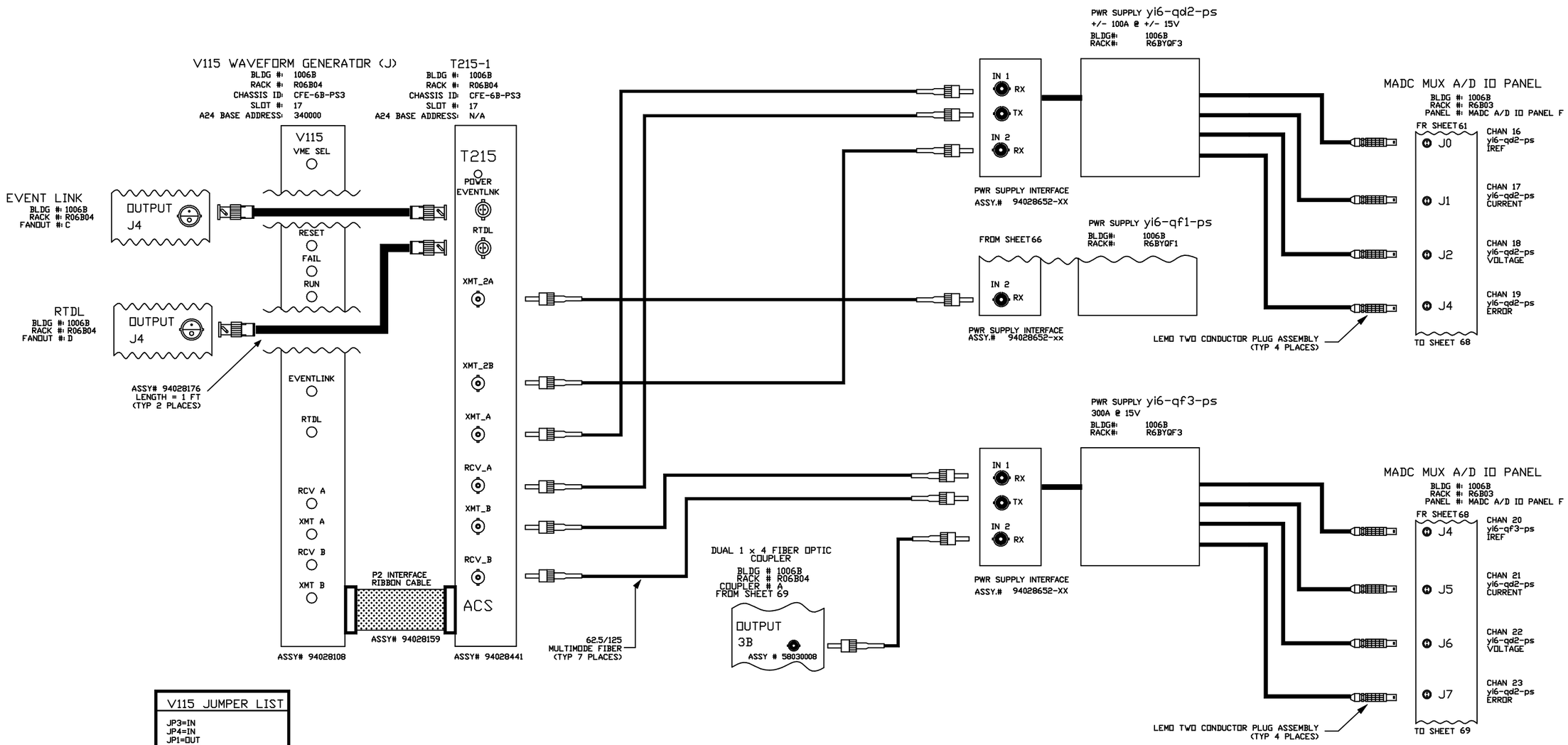

V115 JUMPER LIST
JP3=IN JP4=IN JP1=OUT JP2=OUT
A24 BASE ADDRESS JB1-A23=IN JB1-A22=IN JB1-A21=OUT JB1-A20=OUT JB1-A19=IN JB1-A18=OUT

-3	-2	-1	REF DESIGNATOR	ITEM NO.	DESCRIPTION	MAT'L DWG NO./BNL NO.
QTY REQD						

INTERPRET IN GENERAL ACCORDANCE WITH ASME Y14.24M-1989

UNLESS OTHERWISE SPECIFIED DIMENSIONS ARE IN INCHES
DECIMAL TOLERANCES
.X ±.030
.XX ±.015
.XXX ±.005
ANGULAR TOLERANCE
± .5°

OUTSTANDING ECN

NA FINISH

BREAK SHARP EDGES
MAX. XX MIN. XX

Q.A. CATEGORY A-3

		DATE
DRAWN BY	Venegas	6/18/03
CHECKED BY		
DESIGN APPROVAL		
ENGINEER APPROVAL		
SUPVR. APPROVAL		

NEXT ASSEMBLY

BROOKHAVEN NATIONAL LABORATORY
UPTON, N.Y. 11973

RHIC CONTROLS WIRING DIAGRAM
BLDG. 1006B, CFE-6B-PS3
yi6-qd2-ps/yi6-qf3-ps

SIZE D
DRAWING NUMBER 94028549
REV. A

MATERIAL: ——— SCALE: NA WEIGHT: – SHEET 68

1 *AUTOCAD

REV.	ZONE	ECN NO.	DATE	BY	CKR	APP.

Bill Venegas, BNL 6/17/2003 2:33 PM 8549_69.dwg

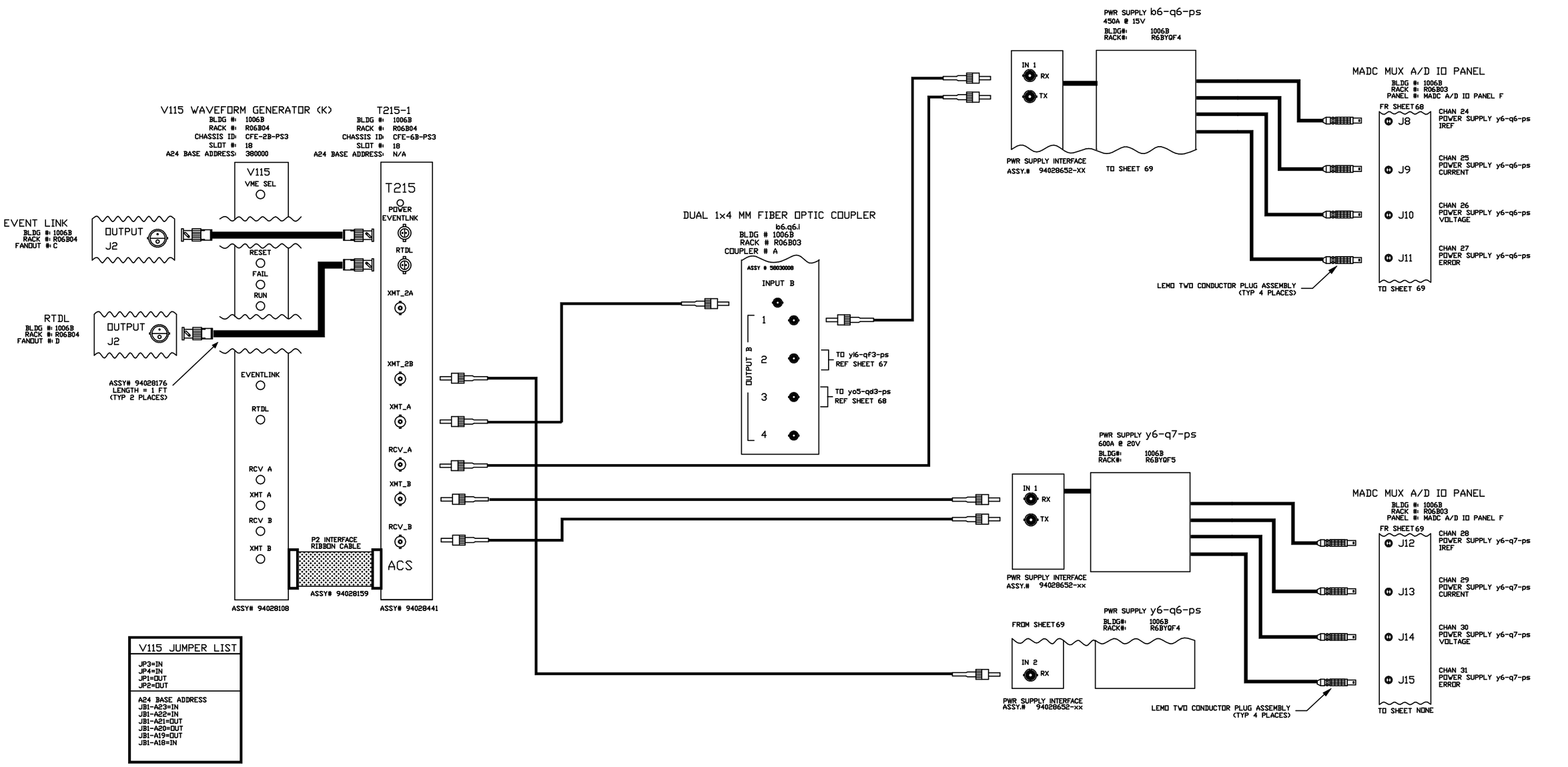

V115 JUMPER LIST

JP3=IN
JP4=IN
JP1=OUT
JP2=OUT

A24 BASE ADDRESS
JB1-A23=IN
JB1-A22=IN
JB1-A21=OUT
JB1-A20=OUT
JB1-A19=OUT
JB1-A18=IN

-3	-2	-1	REF DESIGNATOR	ITEM NO.	DESCRIPTION	MAT'L DWG NO.,BNL NO.
QTY REQD						

INTERPRET IN GENERAL ACCORDANCE WITH ASME Y14.24M-1989

UNLESS OTHERWISE SPECIFIED DIMENSIONS ARE IN INCHES

DECIMAL TOLERANCES
.X ±.030
.XX ±.015
.XXX ±.005
ANGULAR TOLERANCE
± .5°

NA FINISH

BREAK SHARP EDGES
MAX. XX MIN. XX

OUTSTANDING ECN

Q.A. CATEGORY A-3

DRAWN BY	Venegas	6/16/03
CHECKED BY		
DESIGN APPROVAL		
ENGINEER APPROVAL		
SUPVR. APPROVAL		

NEXT ASSEMBLY

BROOKHAVEN NATIONAL LABORATORY
UPTON, N.Y. 11973

RHIC CONTROLS WIRING DIAGRAM
BLDG. 1006B, CFE-6B-PS3
y6-q7-ps/y6-q6-ps

SIZE D
DRAWING NUMBER 94028549
REV. A

MATERIAL: ——— SCALE: NA WEIGHT: – SHEET 69

*AUTOCAD

Bill Venegas, BNL 6/27/2003 1:49 PM 8549_77.dwg

MADC MUX A/D IO PANEL

BLDG #: 1006B
RACK #: R6B03
PANEL #: G

FR SHEET 47

J9	Y05-PWLAMB7.1.ANALOG CH 41 REF:
J10	Y05-PWKI9.1.ANALOG CH 42 REF:
J11	B06-PWLAMB7.1.ANALOG CH 43 REF:
J12	B06-PWKI9.1.ANALOG CH 44 REF:
J13	G5-CC-PWX CH 45 REF:
J14	G5-CC-PW1 CH 46 REF:
J15	Y05-CC-PW3.2 CH 47 REF:

MADC MUX A/D IO PANEL

BLDG #: 1006B
RACK #: R6B03
PANEL #: H

FR SHEET 61

J0	BI5-CC-PW3.2 CH 48 REF:
J1	G6-CC-PWX CH 49 REF:
J2	G5-CC-PW1 CH 50 REF:
J3	YI6-CC-PW3.2 CH 51 REF:
J4	B06-CC-PW3.2 CH 52 REF:

TO SHEET 47

-3	-2	-1	REF DESIGNATOR	ITEM NO.	DESCRIPTION	MAT'L. DWG NO.,SPEC. NO.
QTY REQD						

INTERPRET IN GENERAL ACCORDANCE WITH ASME Y14.24M-1989

UNLESS OTHERWISE SPECIFIED DIMENSIONS ARE IN INCHES

DECIMAL TOLERANCES
.X ±.030
.XX ±.015
.XXX ±.005
ANGULAR TOLERANCE
± .5°

NA FINISH

BREAK SHARP EDGES
MAX. XX MIN. XX

OUTSTANDING ECN

Q.A. CATEGORY A-3		DATE
DRAWN BY	Venegas	06/20/03
CHECKED BY		
DESIGN APPROVAL		
ENGINEER APPROVAL		
SUPVR. APPROVAL		
NEXT ASSEMBLY		

BROOKHAVEN NATIONAL LABORATORY
UPTON, N.Y. 11973

RHIC CONTROLS WIRING DRAWING

1006B, VME CHASSIS CFE-6B-PS3

VACUUM MADC I/O PANELS G & H

SIZE D | DRAWING NUMBER 94028569 | REV. A

MATERIAL: ——— SCALE: FULL WEIGHT: – SHEET 77

*AUTOCAD

Bill Venegas, BNL 6/23/2003 9:02 AM 8549_78.dwg

MADC MUX A/D IO PANEL

BLDG #: 1006B
RACK #: R6B03
PANEL #: MADC A/D IO PANEL H "YELLOW"

FR SHEET 60

J13 — CHAN 61
208V LINE VOLTAGE MONITOR
VOLTAGE

J14 — CHAN 62
208V LINE VOLTAGE MONITOR
VOTAGE

J15 — CHAN 63
208V LINE VOLTAGE MONITOR
VOLTAGE

TO SHEET NONE

MADC MUX A/D IO PANEL

BLDG #: 1006B
RACK #: R6B04
PANEL #: MADC A/D IO PANEL H "BLUE"

FR SHEET 50

J13 — CHAN 61
208V LINE VOLTAGE MONITOR
VOLTAGE

J14 — CHAN 62
208V LINE VOLTAGE MONITOR
VOTAGE

J15 — CHAN 63
208V LINE VOLTAGE MONITOR
VOLTAGE

TO SHEET NONE

-3	-2	-1	REF DESIGNATOR	ITEM NO.	DESCRIPTION	MAT'L. DWG NO.,SPEC. NO.
QTY REQD						

INTERPRET IN GENERAL ACCORDANCE WITH ASME Y14.24M-1989

UNLESS OTHERWISE SPECIFIED DIMENSIONS ARE IN INCHES

DECIMAL TOLERANCES
.X ±.030
.XX ±.015
.XXX ±.005
ANGULAR TOLERANCE
± .5°

NA FINISH — BREAK SHARP EDGES MAX. XX MIN. XX

OUTSTANDING ECN

Q.A. CATEGORY A-3

		DATE
DRAWN BY	Venegas	6/23/03
CHECKED BY		
DESIGN APPROVAL		
ENGINEER APPROVAL		
SUPVR. APPROVAL		

NEXT ASSEMBLY

BROOKHAVEN NATIONAL LABORATORY
UPTON, N.Y. 11973

RHIC CONTROLS WIRING DIAGRAM
BLDG. 1006B

208 VOLTAGE MONITOR MADC CH

SIZE D — DRAWING NUMBER 94028549 — REV. A

MATERIAL: ——— SCALE: NA WEIGHT: – SHEET 78

*AUTOCAD