KEITHLEY

Model 6485 Picoammeter

Instruction Manual

A GREATER MEASURE OF CONFIDENCE

WARRANTY

Keithley Instruments, Inc. warrants this product to be free from defects in material and workmanship for a period of 1 year from date of shipment.

Keithley Instruments, Inc. warrants the following items for 90 days from the date of shipment: probes, cables, rechargeable batteries, diskettes, and documentation.

During the warranty period, we will, at our option, either repair or replace any product that proves to be defective.

To exercise this warranty, write or call your local Keithley representative, or contact Keithley headquarters in Cleveland, Ohio. You will be given prompt assistance and return instructions. Send the product, transportation prepaid, to the indicated service facility. Repairs will be made and the product returned, transportation prepaid. Repaired or replaced products are warranted for the balance of the original warranty period, or at least 90 days.

LIMITATION OF WARRANTY

This warranty does not apply to defects resulting from product modification without Keithley's express written consent, or misuse of any product or part. This warranty also does not apply to fuses, software, non-rechargeable batteries, damage from battery leakage, or problems arising from normal wear or failure to follow instructions.

THIS WARRANTY IS IN LIEU OF ALL OTHER WARRANTIES, EXPRESSED OR IMPLIED, INCLUDING ANY IMPLIED WARRANTY OF MERCHANTABILITY OR FITNESS FOR A PARTICULAR USE. THE REMEDIES PROVIDED HEREIN ARE BUYER'S SOLE AND EXCLUSIVE REMEDIES.

NEITHER KEITHLEY INSTRUMENTS, INC. NOR ANY OF ITS EMPLOYEES SHALL BE LIABLE FOR ANY DIRECT, INDIRECT, SPECIAL, INCIDENTAL OR CONSEQUENTIAL DAMAGES ARISING OUT OF THE USE OF ITS INSTRUMENTS AND SOFTWARE EVEN IF KEITHLEY INSTRUMENTS, INC., HAS BEEN ADVISED IN ADVANCE OF THE POSSIBILITY OF SUCH DAMAGES. SUCH EXCLUDED DAMAGES SHALL INCLUDE, BUT ARE NOT LIMITED TO: COSTS OF REMOVAL AND INSTALLATION, LOSSES SUSTAINED AS THE RESULT OF INJURY TO ANY PERSON, OR DAMAGE TO PROPERTY.

KEITHLEY

Keithley Instruments, Inc.		28775 Aurora Road • Cleveland, Ohio 44139 • 440-248-0400 • Fax: 440-248-6168 **1-888-KEITHLEY (534-8453) • www.keithley.com**
Sales Offices:	BELGIUM:	Bergensesteenweg 709 • B-1600 Sint-Pieters-Leeuw • 02-363 00 40 • Fax: 02/363 00 64
	CHINA:	Yuan Chen Xin Building, Room 705 • 12 Yumin Road, Dewai, Madian • Beijing 100029 • 8610-6202-2886 • Fax: 8610-6202-2892
	FINLAND:	Tietäjäntie 2 • 02130 Espoo • Phone: 09-54 75 08 10 • Fax: 09-25 10 51 00
	FRANCE:	3, allée des Garays • 91127 Palaiseau Cédex • 01-64 53 20 20 • Fax: 01-60 11 77 26
	GERMANY:	Landsberger Strasse 65 • 82110 Germering • 089/84 93 07-40 • Fax: 089/84 93 07-34
	GREAT BRITAIN:	Unit 2 Commerce Park, Brunel Road • Theale • Berkshire RG7 4AB • 0118 929 7500 • Fax: 0118 929 7519
	INDIA:	Flat 2B, Willocrissa • 14, Rest House Crescent • Bangalore 560 001 • 91-80-509-1320/21 • Fax: 91-80-509-1322
	ITALY:	Viale San Gimignano, 38 • 20146 Milano • 02-48 39 16 01 • Fax: 02-48 30 22 74
	KOREA:	FL., URI Building • 2-14 Yangjae-Dong • Seocho-Gu, Seoul 137-130 • 82-2-574-7778 • Fax: 82-2-574-7838
	NETHERLANDS:	Postbus 559 • 4200 AN Gorinchem • 0183-635333 • Fax: 0183-630821
	SWEDEN:	c/o Regus Business Centre • Frosundaviks Allé 15, 4tr • 169 70 Solna • 08-509 04 679 • Fax: 08-655 26 10
	SWITZERLAND:	Kriesbachstrasse 4 • 8600 Dübendorf • 01-821 94 44 • Fax: 01-820 30 81
	TAIWAN:	1FL., 85 Po Ai Street • Hsinchu, Taiwan, R.O.C. • 886-3-572-9077• Fax: 886-3-572-9031

© Copyright 2001 Keithley Instruments, Inc.
Printed in the U.S.A.

11/01

Model 6485 Picoammeter
Instruction Manual

©2001, Keithley Instruments, Inc.
All rights reserved.
Cleveland, Ohio, U.S.A.
First Printing, November 2001
Document Number: 6485-901-01 Rev. A

Manual Print History

The print history shown below lists the printing dates of all Revisions and Addenda created for this manual. The Revision Level letter increases alphabetically as the manual undergoes subsequent updates. Addenda, which are released between Revisions, contain important change information that the user should incorporate immediately into the manual. Addenda are numbered sequentially. When a new Revision is created, all Addenda associated with the previous Revision of the manual are incorporated into the new Revision of the manual. Each new Revision includes a revised copy of this print history page.

Revision A (Document number 6485-901-01) .....November 2001

All Keithley product names are trademarks or registered trademarks of Keithley Instruments, Inc.
Other brand names are trademarks or registered trademarks of their respective holders.

KEITHLEY

Safety Precautions

The following safety precautions should be observed before using this product and any associated instrumentation. Although some instruments and accessories would normally be used with non-hazardous voltages, there are situations where hazardous conditions may be present.

This product is intended for use by qualified personnel who recognize shock hazards and are familiar with the safety precautions required to avoid possible injury. Read and follow all installation, operation, and maintenance information carefully before using the product. Refer to the manual for complete product specifications.

If the product is used in a manner not specified, the protection provided by the product may be impaired.

The types of product users are:

Responsible body is the individual or group responsible for the use and maintenance of equipment, for ensuring that the equipment is operated within its specifications and operating limits, and for ensuring that operators are adequately trained.

Operators use the product for its intended function. They must be trained in electrical safety procedures and proper use of the instrument. They must be protected from electric shock and contact with hazardous live circuits.

Maintenance personnel perform routine procedures on the product to keep it operating properly, for example, setting the line voltage or replacing consumable materials. Maintenance procedures are described in the manual. The procedures explicitly state if the operator may perform them. Otherwise, they should be performed only by service personnel.

Service personnel are trained to work on live circuits, and perform safe installations and repairs of products. Only properly trained service personnel may perform installation and service procedures.

Keithley products are designed for use with electrical signals that are rated Installation Category I and Installation Category II, as described in the International Electrotechnical Commission (IEC) Standard IEC 60664. Most measurement, control, and data I/O signals are Installation Category I and must not be directly connected to mains voltage or to voltage sources with high transient over-voltages. Installation Category II connections require protection for high transient over-voltages often associated with local AC mains connections. Assume all measurement, control, and data I/O connections are for connection to Category I sources unless otherwise marked or described in the Manual.

Exercise extreme caution when a shock hazard is present. Lethal voltage may be present on cable connector jacks or test fixtures. The American National Standards Institute (ANSI) states that a shock hazard exists when voltage levels greater than 30V RMS, 42.4V peak, or 60VDC are present. **A good safety practice is to expect that hazardous voltage is present in any unknown circuit before measuring.**

Operators of this product must be protected from electric shock at all times. The responsible body must ensure that operators are prevented access and/or insulated from every connection point. In some cases, connections must be exposed to potential human contact. Product operators in these circumstances must be trained to protect themselves from the risk of electric shock. If the circuit is capable of operating at or above 1000 volts, **no conductive part of the circuit may be exposed.**

Do not connect switching cards directly to unlimited power circuits. They are intended to be used with impedance limited sources. NEVER connect switching cards directly to AC mains. When connecting sources to switching cards, install protective devices to limit fault current and voltage to the card.

Before operating an instrument, make sure the line cord is connected to a properly grounded power receptacle. Inspect the connecting cables, test leads, and jumpers for possible wear, cracks, or breaks before each use.

When installing equipment where access to the main power cord is restricted, such as rack mounting, a separate main input power disconnect device must be provided, in close proximity to the equipment and within easy reach of the operator.

For maximum safety, do not touch the product, test cables, or any other instruments while power is applied to the circuit under test. ALWAYS remove power from the entire test system and discharge any capacitors before: connecting or disconnecting cables or jumpers, installing or removing switching cards, or making internal changes, such as installing or removing jumpers.

Do not touch any object that could provide a current path to the common side of the circuit under test or power line (earth) ground. Always make measurements with dry hands while standing on a dry, insulated surface capable of withstanding the voltage being measured.

The instrument and accessories must be used in accordance with its specifications and operating instructions or the safety of the equipment may be impaired.

Do not exceed the maximum signal levels of the instruments and accessories, as defined in the specifications and operating information, and as shown on the instrument or test fixture panels, or switching card.

When fuses are used in a product, replace with same type and rating for continued protection against fire hazard.

Chassis connections must only be used as shield connections for measuring circuits, NOT as safety earth ground connections.

If you are using a test fixture, keep the lid closed while power is applied to the device under test. Safe operation requires the use of a lid interlock.

If a ⏚ screw is present, connect it to safety earth ground using the wire recommended in the user documentation.

The ⚠ symbol on an instrument indicates that the user should refer to the operating instructions located in the manual.

The ⚠ symbol on an instrument shows that it can source or measure 1000 volts or more, including the combined effect of normal and common mode voltages. Use standard safety precautions to avoid personal contact with these voltages.

The **WARNING** heading in a manual explains dangers that might result in personal injury or death. Always read the associated information very carefully before performing the indicated procedure.

The **CAUTION** heading in a manual explains hazards that could damage the instrument. Such damage may invalidate the warranty.

Instrumentation and accessories shall not be connected to humans.

Before performing any maintenance, disconnect the line cord and all test cables.

To maintain protection from electric shock and fire, replacement components in mains circuits, including the power transformer, test leads, and input jacks, must be purchased from Keithley Instruments. Standard fuses, with applicable national safety approvals, may be used if the rating and type are the same. Other components that are not safety related may be purchased from other suppliers as long as they are equivalent to the original component. (Note that selected parts should be purchased only through Keithley Instruments to maintain accuracy and functionality of the product.) If you are unsure about the applicability of a replacement component, call a Keithley Instruments office for information.

To clean an instrument, use a damp cloth or mild, water based cleaner. Clean the exterior of the instrument only. Do not apply cleaner directly to the instrument or allow liquids to enter or spill on the instrument. Products that consist of a circuit board with no case or chassis (e.g., data acquisition board for installation into a computer) should never require cleaning if handled according to instructions. If the board becomes contaminated and operation is affected, the board should be returned to the factory for proper cleaning/servicing.

Table of Contents

1 Getting Started

Introduction 1-2
Overview of this manual 1-2
General information 1-3
Warranty information 1-3
Contact information 1-3
Safety symbols and terms 1-3
Unpacking and inspection 1-3
Inspection for damage 1-3
Handling precautions 1-4
Package content 1-4
Options and accessories 1-4
Input cables, connectors, and adapters 1-4
GPIB and trigger link cables and adapters 1-5
Rack mount kits 1-5
Carrying case 1-5
Instruction Manual 1-5
Additional references 1-6
Features 1-6
Front and rear panel familiarization 1-6
Front panel summary 1-6
Rear panel summary 1-8
Analog output 1-10
Display 1-12
Status and error messages 1-12
Power-up 1-12
Line power connection 1-12
Line frequency 1-13
Front panel procedure 1-13
SCPI programming — line frequency 1-13
Power-up sequence 1-14
Default settings 1-15
Front panel setup operation 1-15
To save a user setup 1-15
To restore any setup 1-15
To select power-on setup 1-15
Remote setup operation 1-16
Saving and restoring user setups 1-16
Restoring factory or GPIB default setups 1-16
Selecting power-on setup 1-16
Menu 1-18

SCPI programming 1-18
Optional command words 1-19
Query commands 1-19

2 Measurement Concepts

Measurement overview 2-2
Performance considerations 2-2
Warm-up period 2-2
Autozero 2-2
SCPI programming 2-3
SYSTem:AZERo[:STATe] <b> 2-3
Connection fundamentals 2-3
Input connector 2-3
Maximum input levels 2-4
Low noise input cables 2-5
Basic connections to DUT 2-6
Connections 2-6
Voltages greater than 220V 2-6
Input voltage overload (OVRVOLT message) 2-9
Test fixture 2-9
Test fixture chassis 2-10
Guard plate 2-10
Connectors, terminals, and internal wiring 2-10
Handling and cleaning test fixtures 2-10
Input protection 2-11
Floating measurements 2-12
Zero check and zero correct 2-13
Zero check 2-13
Zero correct 2-14
SCPI programming — zero check and zero correct 2-15
A) SYSTem:ZCORrect:ACQuire 2-15
B) SYSTem:ZCORrect[:STATe] <b> 2-16
Measurement considerations 2-16

3 Measurements

Measurement overview 3-2
Procedure 3-2
Step 1. Enable zero check 3-3
Step 2. Perform zero correction 3-3
Step 3. Select a manual measurement range or enable auto range 3-3
Step 4. Connect the current to be measured to the picoammeter 3-3
Step 5. Disable zero check and take a reading from the display 3-3

SCPI programming 3-5
A) SENSe:DATA? 3-5
Programming example 3-5

4 Range, Units, Digits, Rate, and Filters

Range, units, and digits 4-2
Range 4-2
Manual ranging 4-2
Autoranging 4-2
Autorange limits 4-3
Units 4-3
Digits 4-3
SCPI programming — range and digits 4-4
Programming example — range and digits 4-4
Rate 4-5
SCPI programming — rate 4-6
Programming example — rate 4-7
Filters 4-7
Median filter 4-7
Median filter control 4-8
Digital filter 4-8
Digital filter classifications 4-8
Digital filter types 4-8
Response time 4-10
Operation consideration 4-10
Digital filter control 4-11
SCPI programming — filters 4-12
Programming example 4-12

5 Relative, mX+b, m/X+b (reciprocal), and log

Relative 5-2
Setting and controlling relative 5-2
REL key 5-2
Displaying or manually keying in REL 5-3
SCPI programming — relative 5-4
Programming example — relative 5-5
mX+b, m/X+b (reciprocal), and Logarithmic 5-5
mX+b and m/X+b 5-5
Configuring and controlling mX+b and m/X+b 5-5
Logarithmic 5-6
SCPI programming — mX+b, m/X+b, and log 5-7
A) :DATA? and :DATA:LATest? 5-7
Programming example — mX+b 5-8

6 Buffer

Buffer operations 6-2
Store 6-2
Recall 6-3
Buffer timestamps 6-4
Buffer statistics 6-4
SCPI programming 6-5
Programming example 6-8

7 Triggering

Trigger models 7-2
Idle and initiate 7-4
Trigger model operation 7-4
Event detectors and control sources 7-5
Trigger delay 7-6
Measure action 7-6
Output triggers 7-7
Counters 7-7
Trigger model configuration — front panel 7-7
SCPI programming 7-9
Programming example 7-11
External triggering 7-11
Input trigger requirements 7-12
Output trigger specifications 7-12
External trigger example 7-13

8 Limit Tests

Limit testing 8-2
Front panel operation 8-5
Limit test configuration 8-5
Limits configuration menu 8-5
Arm layer configuration menu 8-5
Perform limit tests 8-6
Step 1. Configure test system 8-6
Step 2. Configure measurement 8-6
Step 3. Configure limit tests 8-6
Step 4. Start testing process 8-6
Step 5. Stop testing process 8-6
SCPI programming 8-7
Programming example 8-8

9 Remote Operation

Selecting and configuring an interface 9-2
Interfaces 9-2
Languages 9-2
Interface selection and configuration procedures 9-3
Configuring the GPIB interface 9-3
RS-232 interface 9-3
GPIB operation and reference 9-4
GPIB bus standards 9-4
GPIB bus connections 9-4
Primary address 9-7
General IEEE-488 bus commands 9-7
Commands and associated statements 9-7
REN (remote enable) 9-7
IFC (interface clear) 9-8
LLO (local lockout) 9-8
GTL (go to local) 9-8
DCL (device clear) 9-8
SDC (selective device clear) 9-8
GET (group execute trigger) 9-9
SPE, SPD (serial polling) 9-9
Front panel GPIB operation 9-9
Error and status messages 9-9
GPIB status indicators 9-9
LOCAL key 9-10
Programming syntax 9-10
Command words 9-10
Query commands 9-12
Case sensitivity 9-12
Long-form and short-form versions 9-12
Short-form rules 9-12
Program messages 9-13
Single command messages 9-13
Multiple command messages 9-14
Command path rules 9-14
Using common commands and SCPI commands in the same message 9-14
Program Message Terminator (PMT) 9-15
Command execution rules 9-15
Response messages 9-15
Sending a response message 9-15
Multiple response messages 9-15
Response Message Terminator (RMT) 9-16
Message exchange protocol 9-16

RS-232 interface reference 9-16
Sending and receiving data 9-16
RS-232 settings 9-16
Baud rate 9-17
Data and stop bits 9-17
Parity 9-17
Terminator 9-17
Flow control (signal handshaking) 9-17
RS-232 connections 9-18
Error messages 9-19

10 Status Structure

Overview 10-2
Clearing registers and queues 10-4
Programming and reading registers 10-5
Programming enable registers 10-5
Reading registers 10-6
Status byte and service request (SRQ) 10-7
Status byte register 10-8
Service request enable register 10-8
Serial polling and SRQ 10-9
SPE, SPD (serial polling) 10-9
Status byte and service request commands 10-9
Programming example — set MSS (B6) when error occurs 10-10
Status register sets 10-10
Register bit descriptions 10-10
Standard event status 10-10
Operation event status 10-12
Measurement event status 10-13
Questionable event status 10-15
Condition registers 10-15
Event registers 10-16
Event enable registers 10-17
Programming example — program and read registers 10-18
Queues 10-18
Output queue 10-18
Error queue 10-18
Programming example — read error queue 10-20

11 Common Commands

Common Commands 11-2

12 SCPI Signal Oriented Measurement Commands

13 DISPlay, FORMat, and SYSTem

DISPlay subsystem 13-2
FORMat subsystem 13-3
SYSTem subsystem 13-8

14 SCPI Reference Tables

General notes 14-2

15 Performance Verification

Introduction 15-2
Verification test requirements 15-2
    Environmental conditions 15-2
    Warm-up period 15-3
    Line power 15-3
Recommended test equipment 15-3
Verification limits 15-5
    Example reading limits calculation 15-5
Calibrator voltage calculations 15-5
Performing the verification test procedures 15-6
    Test considerations 15-6
    Restoring factory defaults 15-6
Offset voltage calibration 15-7
Current measurement accuracy 15-7
    20mA-20mA range accuracy 15-7
    2nA-2mA range accuracy 15-8

16 Calibration

Introduction 16-2
Environmental conditions 16-2
    Temperature and relative humidity 16-2
    Warm-up period 16-2
    Line power 16-2
Calibration considerations 16-3
Calibration cycle 16-3
Recommended calibration equipment 16-3
Calibration errors 16-4
Calibration menu 16-5
Aborting calibration 16-6
Current calculations 16-6

Calibration procedure 16-6
Preparing for calibration 16-6
Offset voltage calibration 16-7
Current calibration 16-7
20mA-20mA range calibration 16-7
2nA-2mA range calibration 16-9
Entering calibration dates and saving calibration 16-11
Locking out calibration 16-12
Calibration support 16-12
Changing the calibration code 16-12
Resetting the calibration code 16-12
Displaying calibration dates 16-13
Displaying the calibration count 16-13

17 Routine Maintenance

Introduction 17-2
Setting line voltage and replacing line fuse 17-2
Front panel tests 17-3
DISP test 17-4
KEY test 17-4

A Specifications

B Status and Error Messages

C General Measurement Considerations

Measurement considerations C-2
Ground loops C-2
Triboelectric effects C-3
Piezoelectric and stored charge effects C-3
Electrochemical effects C-4
Humidity C-4
Light C-4
Electrostatic interference C-4
Magnetic fields C-5
Electromagnetic Interference (EMI) C-5

D DDC Emulation Commands

DDC language D-2
Status Byte Format D-12

E Example Programs

Programming examples E-2
1000 readings/second into internal buffer E-2
900 readings/second to IEEE-488 bus E-3

F IEEE-488 Bus Overview

Introduction F-2
Bus description F-2
Bus lines F-4
Data lines F-5
Bus management lines F-5
Handshake lines F-5
Bus commands F-6
Uniline commands F-9
Universal multiline commands F-9
Addressed multiline commands F-10
Address commands F-10
Unaddress commands F-10
Common commands F-11
SCPI commands F-11
Command codes F-11
Typical command sequences F-12
IEEE command groups F-13
Interface function codes F-14

G IEEE-488 and SCPI Conformance Information

Introduction G-2
GPIB 488.1 Protocol G-3
Selecting the 488.1 protocol G-4
Protocol differences G-4
Message exchange protocol (MEP) G-5
Using SCPI-based programs G-5
NRFD hold-off G-5
NDAC hold-off G-6
Trigger-on-talk G-7
Message available G-7
General operation notes G-7
SRQ when buffer fills with 200 readings G-7

H Remote Calibration

Introduction H-2
Calibration commands H-2
Remote calibration overview H-3

I Applications Guide

Measurement considerations I-2
- Leakage currents and guarding I-2
- Input bias current I-3
- Voltage burden I-3
  - Voltage offset correction procedure I-4
- Noise and source impedance I-5
  - Source resistance I-5
  - Source capacitance I-6
- Electrostatic interference and shielding I-7
  - Shielding vs. Guarding I-10
- Making connections I-10
- Typical range change transients I-12
  - Up-range input response I-13
  - Down-range voltage transients are smaller I-14
- Steps to minimize impact of range change transients I-15
  - Run test with a fixed range. I-15
  - Down-range by starting at highest current necessary I-15
  - Using protection circuitry I-16
  - Reduce up-ranging transient I-16
- Zero check on / off response I-16

Applications I-18
- Diode leakage current I-18
- Capacitor leakage current I-19
- Measuring high resistance with external bias source I-19
- Cable insulation resistance I-21
- Surface insulation resistance (SIR) I-22
- Photodiode characterization prior to dicing I-22
- Focused ion beam applications I-25
- Using switching systems to measure multiple current sources I-26

List of Illustrations

1 Getting Started

Figure 1-1 Front panel 1-7
Figure 1-2 Rear panel 1-9
Figure 1-3 Typical analog output connections 1-11

2 Measurement Concepts

Figure 2-1 BNC Input connector 2-4
Figure 2-2 Maximum input levels 2-5
Figure 2-3 Basic connections 2-6
Figure 2-4 Shielding for measurements (unguarded) 2-8
Figure 2-5 General purpose test fixture 2-9
Figure 2-6 Capacitor test circuit without protection 2-11
Figure 2-7 Capacitor test circuit with protection 2-12
Figure 2-8 Floating measurements 2-13
Figure 2-9 Equivalent input impedance with zero check enabled 2-14

3 Measurements

Figure 3-1 Connections for amps 3-4

4 Range, Units, Digits, Rate, and Filters

Figure 4-1 Speed vs. noise characteristics 4-5
Figure 4-2 Digital filter; averaging and advanced classifications 4-9
Figure 4-3 Digital filter types; moving and repeating 4-10

6 Buffer

Figure 6-1 Buffer locations 6-3

7 Triggering

Figure 7-1 Trigger model — front panel operation 7-2
Figure 7-2 Trigger model — remote operation 7-3
Figure 7-3 Measure action block of trigger model 7-6
Figure 7-4 Trigger link connection operation 7-11
Figure 7-5 Trigger link input pulse specifications 7-12
Figure 7-6 Trigger link output pulse specifications 7-12
Figure 7-7 DUT test system 7-13
Figure 7-8 Trigger link connections 7-14
Figure 7-9 Operation model for triggering example 7-15

8 Limit Tests

Figure 8-1 Limit tests 8-2
Figure 8-2 Limit tests example 8-2
Figure 8-3 Operation model for limit test 8-4

9 Remote Operation

Figure 9-1 IEEE-488 connector 9-5
Figure 9-2 Multi-unit connections 9-5
Figure 9-3 IEEE-488 connector location 9-6
Figure 9-4 RS-232 interface connector 9-18

10 Status Structure

Figure 10-1 6485 status mode structure 10-3
Figure 10-2 16-bit status register 10-6
Figure 10-3 Status byte and service request 10-7
Figure 10-4 Standard event status 10-11
Figure 10-5 Operation event status 10-12
Figure 10-6 Measurement event status 10-14
Figure 10-7 Questionable event status 10-15

13 DISPlay, FORMat, and SYSTem

Figure 13-1 ASCII data format 13-4
Figure 13-2 IEEE-754 single precision data format (32 data bits) 13-5
Figure 13-3 Key-press codes 13-10

15 Performance Verification

Figure 15-1 Connections for 20µA to 20mA range verification 15-8
Figure 15-2 Connections for 2nA to 2µA range verification 15-10

16 Calibration

Figure 16-1 Connections for 20µA to 20mA range calibration 16-9
Figure 16-2 Connections for 2nA to 2µA range calibration 16-11

17 Routine Maintenance

Figure 17-1 Line fuse location 17-3

C General Measurement Considerations

Figure C-1 Power line ground loops C-2
Figure C-2 Eliminating ground loops C-3

D DDC Emulation Commands

Figure D-1 U0 Status word D-10
Figure D-2 U1 Status word D-11
Figure D-3 U2 Status word D-12
Figure D-4 Status byte format D-14

F IEEE-488 Bus Overview

Figure F-1 IEEE-488 bus configuration F-4
Figure F-2 IEEE-488 handshake sequence F-6

G IEEE-488 and SCPI Conformance Information

Figure G-1 IEEE-488 handshake sequence G-6
Figure G-2 Program example G-8

I Applications Guide

Figure I-1 Guarding to reduce leakage currents I-3
Figure I-2 Voltage burden considerations I-5
Figure I-3 Simplified model of a feedback picoammeter I-6
Figure I-4 Electrostatic coupling I-8
Figure I-5 Shielding a high impedance device I-9
Figure I-6 Electrostatic shielding I-9
Figure I-7 Connecting the HI terminal (picoammeter) to high resistance I-10
Figure I-8 Proper connection I-11
Figure I-9 Improper connection I-12
Figure I-10 Range change voltage transients I-13
Figure I-11 Transient Voltage I-14
Figure I-12 Down-range voltage transients I-15
Figure I-13 Zero check transient I-17
Figure I-14 Connections; diode leakage current test I-18
Figure I-15 Connections; capacitor leakage current test I-19
Figure I-16 Measuring High Resistance Using the 6485 ..... I-20
Figure I-17 Overload Protection Circuit for 6485 Picoammeter I-20
Figure I-18 Connections; cable insulation resistance test I-21
Figure I-19 Connections; surface insulation resistance test I-22
Figure I-20 General photo diode leakage I-23
Figure I-21 PIN photo diode leakage I-24
Figure I-22 Avalanche photo diode leakage I-24
Figure I-23 Basic connection scheme I-25
Figure I-24 Focused Ion Beam signal connections I-26

List of Tables

1 Getting Started

Table 1-1 Example 2V analog output values 1-11
Table 1-2 SCPI commands — line frequency 1-13
Table 1-3 Default settings 1-16
Table 1-4 MENU structure 1-18

2 Measurement Concepts

Table 2-1 Basic measurement capabilities 2-2
Table 2-2 SCPI commands — autozero 2-3
Table 2-3 Display messages for zero check and zero correct 2-13
Table 2-4 SCPI commands — zero check and zero correct 2-15
Table 2-5 Summary of measurement considerations 2-16

3 Measurements

Table 3-1 SCPI commands — amps function 3-5

4 Range, Units, Digits, Rate, and Filters

Table 4-1 Measurement ranges 4-2
Table 4-2 SCPI commands — digits 4-4
Table 4-3 Ranges and values 4-5
Table 4-4 SCPI commands — rate 4-6
Table 4-5 SCPI commands — filters 4-12

5 Relative, mX+b, m/X+b (reciprocal), and log

Table 5-1 Range symbols for rel values 5-3
Table 5-2 SCPI commands — relative (null) 5-4
Table 5-3 SCPI commands — mX+b, m/X+b, and log 5-7

6 Buffer

Table 6-1 SCPI commands — buffer 6-5

7 Triggering

Table 7-1 Auto delay settings 7-6
Table 7-2 Trigger model menu structure 7-7
Table 7-3 SCPI commands — triggering 7-9

8 Limit Tests

Table 8-1 Test limit display messages 8-3
Table 8-2 SCPI commands — limit tests 8-7

9 Remote Operation

Table 9-1 General bus commands 9-7
Table 9-3 PC serial port pinout 9-19
Table 9-2 RS-232 connector pinout 9-19

10 Status Structure

Table 10-1 Common and SCPI commands — reset registers and clear queues 10-4
Table 10-2 SCPI command — data formats for reading status registers 10-7
Table 10-3 Common commands — status byte and service request enable registers 10-10
Table 10-4 Common and SCPI commands — condition registers 10-16
Table 10-5 Common and SCPI commands — event registers 10-16
Table 10-6 Common and SCPI commands — event enable registers 10-17
Table 10-7 SCPI commands — error queue 10-20

11 Common Commands

Table 11-1 IEEE-488.2 common commands and queries 11-2

12 SCPI Signal Oriented Measurement Commands

Table 12-1 Signal oriented measurement command summary 12-2

13 DISPlay, FORMat, and SYSTem

Table 13-1 SCPI commands — display 13-2
Table 13-2 SCPI commands — data format 13-3
Table 13-3 SCPI commands — system 13-8

14 SCPI Reference Tables

Table 14-1 CALCulate command summary 14-2
Table 14-2 DISPlay command summary 14-4
Table 14-4 SENSe command summary 14-5
Table 14-3 FORMat command summary 14-5
Table 14-5 STATus command summary 14-6
Table 14-6 SYSTem command summary 14-8
Table 14-7 TRACe command summary 14-9
Table 14-8 TRIGger command summary 14-10

15 Performance Verification

Table 15-1 Recommended performance verification equipment 15-4
Table 15-2 Reading limits for 20µA to 20mA ranges 15-8
Table 15-3 Reading limits for 2nA to 2µA ranges 15-9

16 Calibration

Table 16-1 Recommended calibration equipment 16-4
Table 16-3 Calibration menu 16-5
Table 16-2 Test uncertainty ratios with recommended equipment 16-5
Table 16-4 20µA to 20mA range calibration summary 16-8
Table 16-5 2nA to 2µA range calibration summary 16-10

17 Routine Maintenance

Table 17-1 Line fuse ratings 17-2
Table 17-2 Front panel tests 17-3

B Status and Error Messages

Table B-1 Status and error messages B-2

D DDC Emulation Commands

Table D-1 Device dependent command summary D-2
Table D-2 Status byte and mask interpretation D-13

F IEEE-488 Bus Overview

Table F-1 IEEE-488 bus command summary F-7
Table F-2 Command codes F-8
Table F-3 Hexadecimal and decimal command codes F-11
Table F-4 Typical bus sequence F-12
Table F-5 Typical addressed command sequence F-12
Table F-6 IEEE command groups F-13
Table F-7 Model 6485 interface function codes F-14

G IEEE-488 and SCPI Conformance Information

Table G-1 IEEE-488 documentation requirements G-2
Table G-2 Coupled commands G-3

H Remote Calibration

Table H-1 Calibration commands H-2
Table H-2 Calibration commands by range H-4

I Applications Guide

Table I-1 Minimum recommended source resistance values I-6
Table I-2 Internal impedance for zero check transient I-17

1
Getting Started

- **Introduction** — Description of the Model 6485 Picoammeter.
- **Overview of this manual** — Provides content of this manual.
- **General information** — Covers general information that includes warranty information, contact information, safety symbols and terms, inspection, and available options and accessories.
- **Features** — Summarizes the features of Model 6485.
- **Front and rear panel familiarization** — Summarizes the controls and connectors of the instrument as well as providing information on the front panel display.
- **Power-up** — Covers line power connection, line voltage setting, fuse replacement, power line frequency, and the power-up sequence.
- **Default settings** — Covers the five instrument setup configurations available to the user; three user defined, GPIB defaults, or factory defaults.
- **SCPI programming** — Explains how SCPI commands are presented in this manual.

Introduction

The Model 6485 is a high resolution bus-programmable (RS-232 and IEEE-488) picoammeter. The Model 6485 has the following current measurement ranges: 8 ranges (from 20mA down to the 2nA range, with the 2nA range having the lowest noise).

Overview of this manual

This manual describes how to connect, program, and maintain the Model 6485 Picoammeter. The sections of the manual are organized as follows:

- Section 1: Getting Started
- Section 2: Measurement Concepts and Connections
- Section 3: Measurements
- Section 4: Range, Units, Digits, Rate, and Filters
- Section 5: Relative, mX+b, m/X+b (Reciprocal), and Log
- Section 6: Buffer
- Section 7: Triggering
- Section 8: Limit test
- Section 9: Remote Operation
- Section 10: Status Structure
- Section 11: Common Commands
- Section 12: SCPI Signal Oriented Measurement Commands
- Section 13: DISPlay, FORMat, and SYSTem
- Section 14: SCPI Reference Tables
- Section 15: Performance Verification
- Section 16: Calibration
- Section 17: Routine Maintenance

Appendices to this manual contain specification and also provide additional information on specific topics. The appendices are organized as follows:

- Appendix A: Specifications
- Appendix B: Status and Error Messages
- Appendix C: Measurement Considerations
- Appendix D: DDC Emulation Commands
- Appendix E: Example Programs
- Appendix F: IEEE-488 Bus Overview
- Appendix G: IEEE-488 and SCPI Conformance Information
- Appendix H: Remote Calibration
- Appendix I: Applications Guide

General information

Warranty information

Warranty information is located at the front of this manual. Should your Model 6485 require warranty service, contact the Keithley representative or authorized repair facility in your area for further information. When returning the instrument for repair, be sure to fill out and include the service form at the back of this manual to provide the repair facility with the necessary information.

Contact information

Worldwide phone numbers are listed at the front of this manual. If you have any questions, please contact your local Keithley representative or call one of our Application Engineers at 1-800-348-3735 (U.S. and Canada only).

Safety symbols and terms

The following symbols and terms may be found on the instrument or used in this manual:

The ⚠ symbol on an instrument indicates that the user should refer to the operating instructions located in the manual.

The ⚠ symbol on the instrument shows that high voltage may be present on the terminal(s). Use standard safety precautions to avoid personal contact with these voltages.

The **WARNING** heading used in this manual explains dangers that might result in personal injury or death. Always read the associated information very carefully before performing the indicated procedure.

The **CAUTION** heading used in this manual explains hazards that could damage the instrument. Such damage may invalidate the warranty.

Unpacking and inspection

Inspection for damage

The Model 6485 was carefully inspected electrically and mechanically before shipment. After unpacking all items from the shipping carton, check for any obvious signs of physical damage that may have occurred during transit. (There may be a protective film over the display lens, which can be removed.) Report any damage to the shipping agent immediately. Save the original packing carton for possible future shipment. Before removing the 6485 Picoammeter from the bag, observe the precautions on handling discussed below.

Handling precautions

- Always grasp the 6485 by the covers.
- After removing the 6485 from its anti-static bag, inspect it for any obvious signs of physical damage. Report any such damage to the shipping agent immediately.
- When the 6485 is not installed and connected, keep the unit in its anti-static bag, and store it in the original packing carton.

Package content

The following items are included with every Model 6485 order:

- Model 6485 Picoammeter with line cord.
- Low Noise Cable with Male BNC on both ends (Model 4801).
- Protective BNC Shield/Cap (CAP-18).
- Banana lead to screw terminal adapter (Model CA-186-1B). (Referred to as ground link throughout this manual.)
- Accessories as ordered.
- Certificate of calibration.
- Model 6485 User Manual (P/N LCHR-950-01).
- Manual Addenda (pertains to any improvements or changes concerning the instrument or manual).

Options and accessories

Input cables, connectors, and adapters

Model 4801 Input Cable — This 4 ft (1.2m) low-noise coax cable is terminated with male BNC connectors on each end. (One Model 4801 is included with every order).

Model 4802-10 — This 10 ft (3m) low-noise coax cable is terminated at one end with a male BNC connector (the other end is unterminated).

Model 4803 Low Noise Cable Kit — This cable kit includes:

- 15m (50 ft) of low noise coax cable
- 10 male BNC connectors
- 5 female BNC chassis-mount connectors

Model 7078-TRX-BNC adapter — 3-slot male triax to female BNC

Model 8607 — Banana cable set (1m).

CA-186-1B — Banana lead to screw terminal adapter (one model CA-186-1B is included with every order).

CAP-18 — Protective shield/cap for BNC connectors (one model CAP-18 is included with every order).

CS-565 barrel adapter — This is a barrel adapter that allows you to connect two BNC cables together. Both ends of the adapter are terminated with 2-lug female BNC connectors.

GPIB and trigger link cables and adapters

Models 7007-1 and 7007-2 shielded GPIB cables — Connect Model 6485 to the GPIB bus using shielded cables and connectors to reduce electromagnetic interference (EMI). Model 7007-1 is lm long; Model 7007-2 is 2m long.

Models 8501-1 and 8501-2 trigger link cables — Connect Model 6485 to other instruments with Trigger Link connectors (e.g., Model 7001 Switch System). Model 8501-1 is lm long; Model 8501-2 is 2m long.

Model 8502 trigger link adapter — Lets you connect any of the six trigger link lines of Model 6485 to instruments that use the standard BNC trigger connectors.

Model 8503 DIN to BNC trigger cable — Lets you connect trigger link lines one (Voltmeter Complete) and two (External Trigger) of Model 6485 to instruments that use BNC trigger connectors. Model 8503 is lm long.

Rack mount kits

Model 4288-1 single fixed rack mount kit — Mounts a single Model 6485 in a standard 19-inch rack.

Model 4288-2 side-by-side rack mount kit — Mounts two instruments (Models 182, 428, 486, 487, 2000, 2001, 2002, 2010, 2400, 2410, 2420, 2430, 6430, 6485, 6517 A, 7001) side-by-side in a standard 19-inch rack.

Model 4288-4 side-by-side rack mount kit — Mounts Model 6485 and a 5.25-inch instrument (Models 195A, 196, 220, 224, 230, 263, 595, 614, 617, 705, 740, 775A, 6512) side-by-side in a standard 19-inch rack.

Carrying case

Model 1050 padded carrying case — A carrying case for Model 6485. Includes handles and shoulder strap.

Instruction Manual

If an additional Model 6485 manual is required, order the manual package. The Keithley part number for the Instruction manual is 6485-901-010. The manual package includes an instruction manual and any pertinent addenda.

Additional references

While reading this document, you may find it helpful to consult the following documentation for reference:

Low Level Measurements handbook — Keithley's guide for effective low current, low voltage, and high impedance measurements.

Features

The Model 6485 is a high-performance picoammeter capable of measuring current. Section 2 contains details on its measurement capabilities ("Measurement overview," page 4-2). Features of Model 6485 Picoammeter include:

Setup storage — Five instrument setups (three user, GPIB defaults, and factory defaults) can be saved and recalled. See "Front panel setup operation," page 1-15.

mX+b, m/X+b (reciprocal—for resistance calculations), and log10 — These calculations provide mathematical manipulation of readings (Section 5).

Relative — Null offsets or establish baseline values (Section 5).

Buffer — Store up to 2500 readings in the internal buffer (Section 6).

Limits — Set up to two stages of high and low reading limits to test devices (Section 8).

Remote interface — Model 6485 can be controlled using the IEEE-488 interface (GPIB) or the RS-232 interface (Section 9).

GPIB programming language — When using the GPIB, the instrument can be programmed using the SCPI or DDC programming language (Section 9).

Front and rear panel familiarization

Front panel summary

The front panel of Model 6485 is shown in Figure 1-1.

Figure 1-1
Front panel

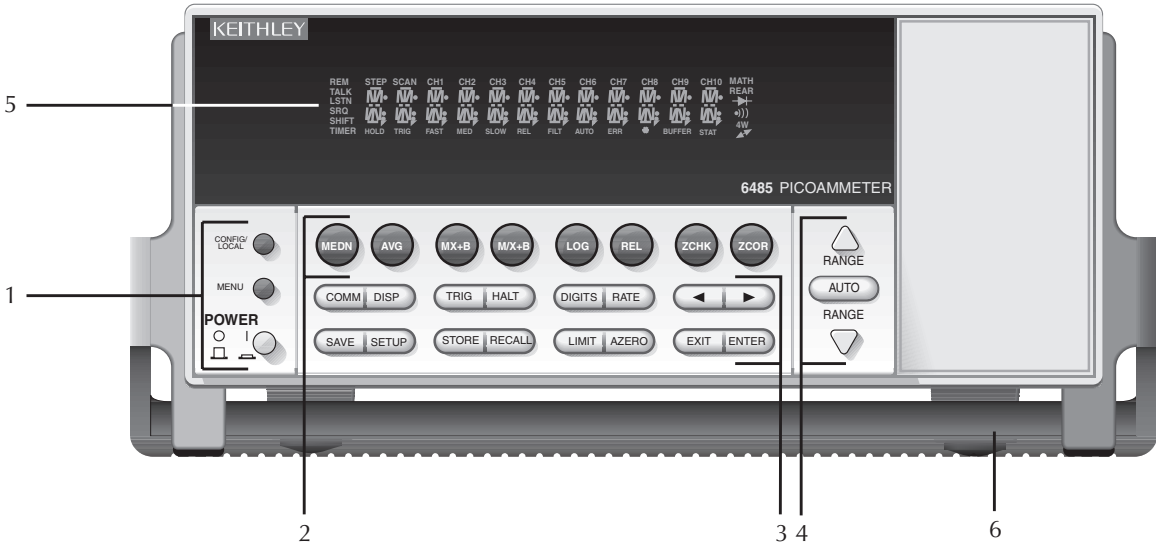

NOTE *To modify a key's properties, press the CONFIG / LOCAL key (see Special keys and power switch) and then the key. Not all keys have configurable properties.*

1 Special keys and power switch

CONFIG/ LOCAL	When in Local operation, use to configure properties of the next button pressed. When in Remote operation (REM annunciator lit), cancels GPIB remote mode.
MENU	Provides access to menu.
POWER	Power switch. In position turns 6485 on (I), out position turns it off (O).

2 Function keys

MEDN	Use to control and modify properties of the median filter.
AVG	Use to control and modify properties of the digital filter.
MX+B	Use to perform and configure properties of the mX+b math function.
M/X+B	Use to perform and configure properties of the m/X+b math function.
LOG	Use to convert output / display to log10 (on / off).
REL	Use to control and configure properties of the rel(ative) function.
ZCHK	Use to perform a Zero Check function.
ZCOR	Use to control Zero Correct function (on / off).

3 Operation keys

COMM	Use to control and modify communication properties (GPIB or RS-232).
DISP	Use to turn display on/off.
TRIG	Trigger measurement(s). Takes 6485 out of idle state. Use also to configure trigger properties.

HALT	Stops measurement process. Puts 6485 in idle state.
DIGITS	Use to set display resolution.
RATE	Use to select measurement rate.
◀ and ▶	Use to control cursor position for making selections or editing values.
SAVE	Use to save present setup to a memory location.
SETUP	Use to restore setup to either GPIB or factory defaults, or to a user memory location. Also use to modify properties of power on defaults to either GPIB or factory defaults, or to a user memory location.
STORE	Use to start buffer and modify the number of readings to store.
RECALL	Use to display stored readings (including maximum, minimum, peak-to-peak, average, and standard deviation). The ▲ and ▼ range keys scroll through the buffer, and the ◀ or ▶ key toggles between reading number, reading, and timestamp.
LIMIT	Use to perform and create limit tests.
AZERO	Use to control auto zero function (on / off).
EXIT	Use to cancel selection and move back to measurement display.
ENTER	Use to accept selection and move to next choice or back to measurement display.

4 Range keys

▲	Use to select the next higher measurement range. Also use to modify the upper autorange limit.
▼	Use to select the next lower measurement range. Also use to modify the lower autorange limit.
AUTO	Enables/disables autorange.

5 Display annunciators

* (asterisk)	Readings being stored in buffer.
(more)	Indicates additional selections are available.
AUTO	Autorange enabled.
BUFFER	Recalling readings stored in buffer.
ERR	Questionable reading, or invalid cal step.
FAST	Fast (0.1 PLC) reading rate selected.
FILT	MEDIAN and/or AVERAGE filter enabled.
LSTN	Instrument addressed to listen over GPIB.
MATH	mX+b, m/X+b, or log10 calculation enabled.
MED	Medium (1 PLC) reading rate selected.
REL	Relative enabled for present measurement function.
REM	Instrument in GPIB remote mode.
SLOW	Slow reading rate selected; 6 PLC for 60Hz or 5 PLC for 50Hz.
SRQ	Service request over GPIB.
STAT	Displaying buffer statistics.
TALK	Instrument addressed to talk over GPIB bus.
TIMER	Timer controlled triggering in use.
TRIG	External triggering (GPIB or trigger link) selected.

6 Handle

Pull out and rotate to desired position.

Rear panel summary

The rear panel of Model 6485 is shown in Figure 1-2.

Figure 1-2
Rear panel

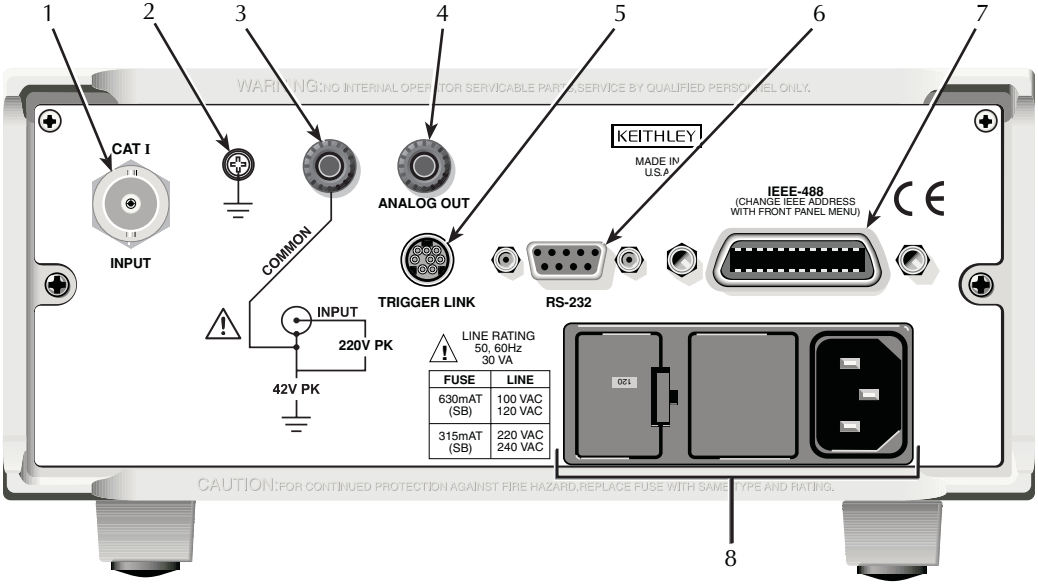

1 INPUT

This standard female BNC connector is used to connect the signal to be measured to the input of the Model 6485. Mates to a BNC cable.

2 CHASSIS

This screw terminal is used to connect COMMON to CHASSIS ground via the ground link connector.

3 COMMON

This standard banana connector can be used as input LO or as the common for the ANALOG OUT. Also can be used as a ground link.

4 ANALOG OUT

This standard banana connector provides a scaled, inverting output (inverting 2V full scale on all ranges).

5 TRIGGER LINK

Eight-pin micro-DIN connector for sending and receiving trigger pulses among connected instruments. Use a trigger link cable or adapter, such as Models 8501-1, 8501-2, 8502 and 8503.

6 RS-232

Female DB-9 connector for RS-232 operation. Use a straight-through (not null modem) DB-9 shielded cable.

7 IEEE-488

Connector for IEEE-488 (GPIB) operation. Use a shielded cable, such as Models 7007-1 and 7007-2.

8 Power module

Contains the AC line receptacle and power line fuse. The instrument can be configured for line voltages of 115V and 230VAC (nominal) at line frequencies of 50 or 60Hz automatically and over the bus. Changing line voltages requires changing fuses.

Analog output

The Model 6485 has an analog output on the rear panel. The ANALOG OUT provides a scaled, inverting ±2V output. A full-scale reading corresponds to ±2V output.

WARNING **The maximum safe voltage between picoammeter LO and chassis ground (common mode voltage) is 42V. The Model 6485 does not internally limit the LO to chassis voltage. Exceeding 42V can create a shock hazard.**

CAUTION **The LO to chassis breakdown voltage is 500V. Exceeding this voltage may cause damage to the instrument.**

Connecting COMMON or ANALOG OUT to earth while floating the input may damage the instrument.

Connections for using this output are shown in Figure 1-3. For a full-scale input (i.e. 2mA on the 2mA range), the output will be -2V. Example analog outputs are listed in Table 1-1.

The 2V analog output signal is not corrected during calibration. Gain errors of up to 3% may appear at this output, depending on range.

The output impedance is 1kΩ. To minimize the effects of loading, the input impedance of the device connected to the ANALOG OUT should be as high as possible. For example, for a device that has an input impedance of 10MΩ, the error due to loading will be approximately 0.01%. High capacitance connected to the analog output will increase the rise time.

Rel and the result of mX+b, m/X+b, or LOG have no affect on the analog output. The 2V analog output is scaled only to the actual input.

Figure 1-3
Typical analog output connections

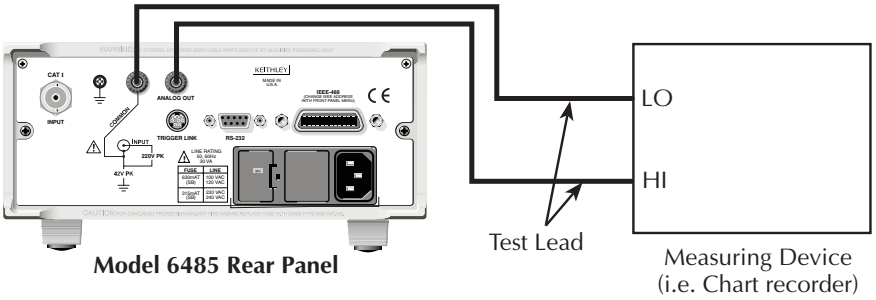

A. Connections

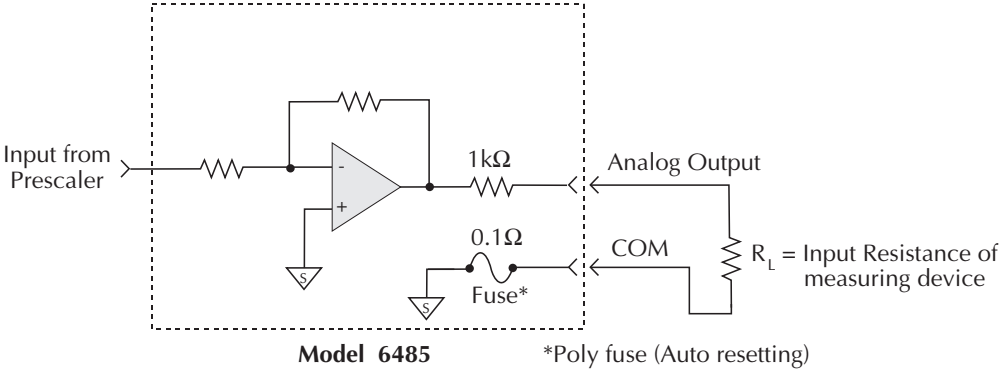

B. Equivalent Circuit

Table 1-1
Example 2V analog output values

Range	Applied signal	Analog output value (nominal)*
20nA	10.5nA	-1.05V
2mA	-1.65mA	1.65V

* Output values are within ±3% of nominal value.

Display

Readings can be displayed in engineering units or scientific notation (see "Units," page 4-3 for details). Annunciators indicate various states of operation. See "Front panel summary," page 1-6 for a complete listing of display annunciators.

The Display and Keys Test allows you to test display digit segments and annunciators, and check the functionality of front panel keys. These tests are accessed through the MENU. To access these tests:

1. While in reading mode, press MENU. If not in reading mode, press EXIT first then press MENU.
2. Scroll using range keys (▲ or ▼) to the TEST sub-menu (TEST will be flashing).
3. Press ENTER (or ◀ ▶) to select TEST (DISP will be flashing).
4. Scroll using range keys (▲ or ▼) to desired test (DISPlay or KEY).

Refer to Section 13 for additional details.

Status and error messages

Status and error messages are displayed momentarily. During operation and programming, you will encounter a number of front panel messages. Typical messages are either of status or error variety, as listed in Appendix B.

Messages, both status and error, are held in queues. For information on retrieving messages from queues, see Section 10.

Power-up

Line power connection

Follow the procedure below to connect the Model 6485 to line power and turn on the instrument.

1. Check to see that the line voltage indicated in the window of the fuse holder assembly (Figure 1-2) is correct for the operating voltage in your area. If not, refer to the procedure in Section 17 for setting line voltage and fuse replacement.

CAUTION **Operating the instrument on an incorrect line voltage may cause damage to the instrument, possibly voiding the warranty.**

2. Before plugging in the power cord, make sure that the front panel power switch is in the off (O) position.
3. Connect the female end of the supplied power cord to the AC receptacle on the rear panel. Connect the other end of the power cord to a grounded AC outlet.

WARNING **The power cord supplied with the Model 6485 contains a separate ground wire for use with grounded outlets. When proper connections are made, instrument chassis is connected to power line ground through the ground wire in the power cord. Failure to use a grounded outlet may result in personal injury or death due to electric shock.**

4. Turn on the instrument by pressing the front panel power switch to the on (I) position.

Line frequency

The Model 6485 operates at line frequencies of 50 or 60Hz. When auto detect is enabled (factory default), line frequencies are automatically sensed and set accordingly, therefore there are no switches to set. Use the :SYSTem:LFRequency? command (query) to read the line frequency. The factory default setting is auto detect enabled.

If the power line is noisy, auto detect may not be able to lock in on a frequency. If this occurs, set the frequency manually. This may be accomplished using the front panel (see the following procedure) or over the bus. Refer to Table 1-2 for commands.

Front panel procedure

1. Press MENU.
2. Scroll to the LFREQ: menu item using the ▲ and ▼ range keys. The present setting is displayed.
3. Press the ▶ range key. The present setting is now highlighted.
4. Use the ▲ and ▼ range keys to scroll to the desired menu item: AUTO*XX*, 50, or 60
5. Press ENTER.

NOTE *In the setting of AUTOXX, XX is the currently detected frequency.*

SCPI programming — line frequency

Table 1-2
SCPI commands — line frequency

Command	Description
SYSTem	SYSTem Subsystem:
:LFRequency <freq>	Set power line frequency (in Hz) to 50 or 60.
:AUTO <b>	Turn automatic frequency detection ON or OFF.
:AUTO?	Read the present automatic detected line frequency state (1 = on, 0 = off).
:LFRequency?	Read present line frequency setting.

Power-up sequence

The following power-up sequence occurs when the Model 6485 is turned on:

1. The Model 6485 performs self-tests on its EPROM and RAM with all digits and annunciators turned on. If a failure is detected, the instrument momentarily displays an error message and the ERR annunciator turns on. Error messages are listed in Appendix B.

NOTE *If a problem develops while the instrument is under warranty, return it to Keithley Instruments Inc., for repair.*

2. If the instrument passes the self-tests, the firmware revision levels are displayed. For example:
   `6485  B01`
3. After the firmware revision levels are displayed, the detected line frequency is displayed.
   For example:
   `FREQ: 60Hz`
4. After the detected line frequency is displayed, information on the selected remote interface is displayed:
   a. **GPIB** — If the GPIB is the selected interface, the instrument will display the selected language (SCPI or DDC) and primary address.
      Examples:
      `SCPI  ADDR:  14`
      `DDC  ADDR:  14`
   b. **RS-232** — If RS-232 is the selected interface, the instrument will display the baud rate setting. For example:
      `RS-232:  9600b`
5. If the FACTory setup is selected as the power on setup, the unit is placed in the default reading mode after the communication information is displayed. If a setup other than FACTory is selected, the configured setup will be displayed. For example, if the USR1 setup (User Setup #1) is selected:
   `USING USR1`

NOTE *To configure power-on set up:*
-Display PWR-ON: menu (press CONFIG and then SETUP).
-Use ▲ or ▼ range keys to scroll through the menu items.
-Press Enter to select or Exit to quit without changing power-on setup.

If DDC language is selected, user setups cannot be saved as power-on setup.

Default settings

The Model 6485 can be restored to one of five setup configurations; factory default (FACT), three user-saved (USR0, USR1 and USR2), and bus default (GPIB). As shipped from the factory, Model 6485 powers up to the factory default settings. Factory default settings provide a general purpose setup for front panel operation, while the bus default (GPIB) settings do the same for remote operation. Factory and GPIB default settings are listed in Table 1-2.

The instrument will power up to whichever default setup was saved as the power-on setup.

NOTE *At the factory, the factory default setup is saved into the USR0, USR1, and USR2 setups.*

Front panel setup operation

To save a user setup

1. Configure Model 6485 for the desired measurement application.
2. Press SAVE to access the save setup menu.
3. Use the ▲ or ▼ key to display the desired memory location (0 = USR0, 1 = USR1, 2 = USR2).
4. Press ENTER.

NOTE *Saved setups should not be used in DDC mode and will not be recalled upon power up (in DDC mode).*

To restore any setup

1. Press SETUP to display the restore menu:
2. Use the ▲ or ▼ key to display the desired setup (FACT, USR0, USR1, USR2, or GPIB).
3. Press ENTER.

To select power-on setup

1. Press CONFIG and then SETUP to display the power-on menu.
2. Use the ▲ or ▼ key to display the desired setup (FACT, USR0, USR1, USR2, or GPIB).
3. Press ENTER.

Remote setup operation

Saving and restoring user setups

The *SAV and *RCL commands are used to save and recall user setups. These commands are documented in Section 9.

Restoring factory or GPIB default setups

The SYSTem:PRESet command returns Model 6485 to the factory defaults and the *RST command returns it to the GPIB defaults. The *RST command is documented in Section 11 and SYSTem:PRESet is covered in Section 12.

Selecting power-on setup

The SYSTem:POSetup command is used to select which setup to return to on power-up. The SYSTem:POSetup command is documented in Section 12.

Table 1-3
Default settings

Setting	Factory (:SYStem:PRESet)	GPIB (*RST)
Trig Layer (CONF-TRIG):		*
TRIG:	TRIG-IN	*
Arm-In Source Event	IMM	
Arm Layer (CONF-ARM):		*
Arm-In Source Event	IMM	1
Arm Count	INF	*
Input Trigger Link Line	1	*
Source Bypass	NEVER	*
Output Trigger Link Line	2	*
Output Trigger	Off	
Buffer (STORE):	Disabled	*
Count	No effect	*
Digital Filter (AVG):	Off	*
Count	10	*
Type	Moving	*
Advanced:	No (disabled)	*
Noise Tolerance	0.0%	*
Display Resolution (DIGITS)	5½-digits	*
Format byte order	Swapped	Normal

*This factory (:SYStem:PRESet) and bus (*RST) GPIB defaults are the same. Bus settings that are different from factory reset are as shown.

Table 1-3 (continued)
Default settings

Setting	Factory (:SYStem:PRESet)	GPIB (*RST)
GPIB:	No effect (On at factory)	*
Address	No effect (14 at factory)	*
Language	No effect (SCPI at factory)	*
Limit Tests:		*
Limit 1 and Limit 2:	Disabled	*
HI and LO Values	1, -1	*
Median Filter:	Off	*
Rank	1	*
MX+B:	Disabled	*
"M" Value	1.0	*
"B" Value	0.0	*
Units	X	*
Log	OFF	*
M/X+B (reciprocal)	Disabled	*
"M" Value	1.0	*
"B" Value	0.0	*
Units	X	*
Range	AUTO	*
Rate:	Slow	*
NPLC	6.0 (60Hz) or 5.0 (50Hz)	*
Rel:	Off	*
Rel Value (VAL)	0.0	*
RS-232:	No effect (Off at factory)	*
All Settings	No effect	*
Trigger Layer (CONF-TRIG):		*
Trig-In Source Event	IMM	*
Trigger Count	1	*
Trigger Delay	0	*
Input Trigger Link Line	1	*
Source Bypass	NEVER	*
Output Trigger Link Line	2	
Units	No effect	*
Zero Check	Enabled	*
Zero Correct	Disabled	*

*This factory (:SYStem:PRESet) and bus (*RST) GPIB defaults are the same. Bus settings that are different from factory reset are as shown.

Menu

Many aspects of operation are configured through the menus summarized in Table 1-4. Refer to the Section listed in the table in-depth information. To access the menu, press the MENU key. Use the ▲ and ▼ range keys to scroll through the menu items, and the ◀ and ▶ cursor keys to change options. Press ENTER to save any changes made and leave the menu. Press EXIT to leave the menu without saving changes.

NOTE *The MENU key is used to access the menu structure. However, if in remote for IEEE-488 bus operation (REM annunciator is lit), pressing the menu key has no effect. Press the LOCAL key to place the unit in local operation, then press the MENU key to access the menu items.*

Table 1-4
MENU structure

Menu item	Description	Reference
CAL	Provides path to the following calibration submenu items: VOFFSET, COUNT, RUN, DATES, UNLOCK, LOCK, and SAVE. See reference section for verification and calibration information.	Section 15, Section 16
TSTAMP	Timestamp format can be ABSolute or DELTa.	Section 6
UNITS	Readings can be displayed in ENGineering units or SCIentific notation.	Section 6
TEST	Run display or key tests.	Section 17
SNUM	Displays the units serial number.	Section 11
LFREQ	Line frequency can be manually set to 50 or 60 Hz, or AUTOmatically set. The number after AUTO indicates present detected frequency value.	"Line frequency," page 1-13

SCPI programming

SCPI programming information is integrated with front panel operation throughout this manual. SCPI commands are listed in tables, and additional information that pertains exclusively to remote operation is provided after each table. The SCPI tables may reference you to other sections of this manual.

NOTE *Except for Section 14, most SCPI tables in this manual are abridged. That is, they do NOT include most optional command words and query commands. Optional command words and query commands are summarized as follows.*

Optional command words

In order to be in conformance with the IEEE-488.2 standard, Model 6485 accepts optional command words. Any command word that is enclosed in brackets ([]) is optional and does not have to be included in the program message.

Query commands

Most command words have a query form. A query command is identified by the question mark (?) that follows the command word. A query command requests (queries) the programmed status of that command. When a query command is sent and Model 6485 is addressed to talk, the response message is sent to the computer.

2
Measurement Concepts

- **Measurement overview** — Explains the basic measurement capabilities of Model 6485.
- **Performance considerations** — Covers a couple of considerations that affect overall performance; warm-up and autozero.
- **Connection fundamentals** — Covers fundamental information about connecting test circuits to the picoammeter.
- **Zero check and zero correct** — Provides operation information on these two important aspects of the basic measurement process.
- **Measurement considerations** — Summarizes the various factors that affect low level measurements.

Measurement overview

The basic measurement capabilities of Model 6485 are summarized in Table 2-1. Accuracy for each measurement function and range is listed in specifications (Appendix A).

Table 2-1
Basic measurement capabilities

Function	Reading Range	Available Ranges
Amps	±20fA to ±21mA	2nA, 20nA, 200nA, 2uA, 20uA, 200uA, 2mA and 20mA

Performance considerations

Warm-up period

Model 6485 can be used within one minute after it is turned on. However, the instrument should be turned on and allowed to warm up for at least one hour before use to achieve rated accuracy. If the instrument has been exposed to extreme temperatures, allow extra time for the internal temperature to stabilize.

Autozero

To help maintain stability and accuracy over time and changes in temperature, the Model 6485 periodically measures internal voltages corresponding to offsets (zero) and amplifier gains. These measurements are used in the algorithm to calculate the reading of the input signal. This process is known as autozeroing.

When autozero is disabled, the offset and gain measurements are not performed. This increases measurement speed up to 3 times. However, the zero and gain reference points can eventually drift resulting in inaccurate readings of the input signal. It is recommended that autozero only be disabled for short periods of time.

To disable autozero from the front panel, press the AZERO button. This button toggles autozero on and off. It can also be enabled by restoring factory or GPIB default conditions. When autozero is enabled, a colon will be displayed after the reading.

For example:

Autozero disabled: `0.00258 nA`
Autozero enabled: `0.00258 nA:`

SCPI programming

Table 2-2
SCPI commands — autozero

Command	Description	Default
SYSTem :AZERo [:STATe] <b>	SYSTem Subsystem: Enable or disable autozero.	 ON

SYSTem:AZERo[:STATe] <b>

Sending this command over the bus does not update the display while in remote. To verify the AZERo state, send the query. The displayed autozero state will be updated when the instrument is placed back in local.

Programming example

The following examples enables or disables the autozero feature:

```
SYST:AZER ON          ' Enable autozero.
SYST:AZER OFF         ' Disable autozero.
SYST:AZER?            ' Query autozero. 1=on, 0=off
```

Connection fundamentals

The following provides important fundamental information on input connections to the Model 6485. Typical connection drawings are included with the various measurement procedures provided in subsequent sections of this manual.

Input connector

The rear panel INPUT connector is a 2-lug female BNC connector (Figure 2-1). Make connections using a male terminated BNC cable (“Low noise input cables,” page 2-5.)

Figure 2-1
BNC Input connector

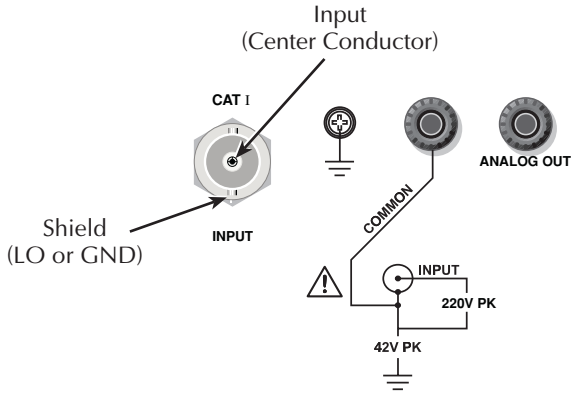

Maximum input levels

The maximum input levels to Model 6485 are summarized in Figure 2-2.

WARNING **The maximum safe voltage between picoammeter LO and chassis ground (common mode voltage) is 42V. The Model 6485 does not internally limit the LO-to-chassis voltage. Exceeding 42V can create a shock hazard.**

CAUTION **The LO-to-chassis breakdown voltage is 500V. Exceeding this voltage may cause damage to the instrument.**

Connecting COMMON or ANALOG OUTPUT to earth while floating the input may damage the instrument.

NOTE *Analog outputs will be at same voltages as applied to the BNC shell.*

Figure 2-2
Maximum input levels

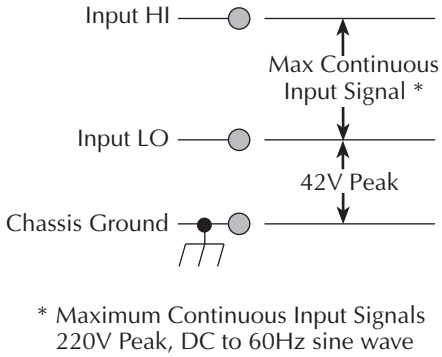

Low noise input cables

When making precision measurements, you should always use low noise cables. The following low noise cables are recommended for use with Model 6485:

Model 4801 Input Cable — This 4 ft (1.2m) low-noise triax cable is terminated with male BNC connectors on each end. (One Model 4801 is included standard with every order.)

Model 4802-10 — This 10 ft (3m) low-noise BNC cable is terminated at one end with a male BNC connector (the other end is unterminated).

Model 4803 Low Noise Cable Kit — This cable kit includes:

- 15m (50 ft) of low noise coax cable
- 10 male BNC connectors
- 5 female BNC chassis-mount connectors

NOTE *As a general rule, always use the shortest possible cable for measurements.*

Basic connections to DUT

Connections

Basic connections are shown in Figure 2-3, the DUT is the current to be measured. Circuit high is connected to the center conductor of the input connector and circuit low is connected to the connector's shell.

Figure 2-3
Basic connections

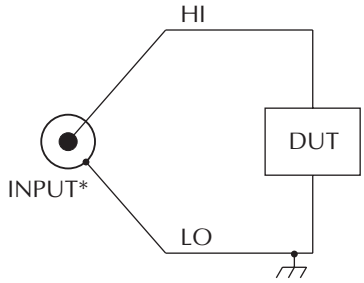

* Maximum Continuous Input Signals
220V Peak, DC to 60Hz sine wave

WARNING **If it is possible for the DUT or external supply to present more than 42V to the input HI, it is imperative that the connection between input LO and the external voltage source be sufficiently low impedance and capable of carrying the short-circuit current of the source, in order that the LO not exceed 42V.**

CAUTION **Current limiting resistors are required for DUTs capable of forcing voltages 220V or greater. Damage to the instrument may result if voltages greater than 220V are forced on the Model 6485 Input HI.**

Voltages greater than 220V

Often, when making resistance measurements, it is necessary to use an external voltage source with voltages greater than the maximum tolerable input voltage of 220V. In the event that the resistance to be measured becomes shorted, or an incorrect value of resistance is inserted in the test setup, the voltage source can permanently damage the Model 6485. To prevent this damage, the following steps should be taken as a protection precaution. (An alternate protection method is described in "Measuring high resistance with external bias source," page I-19, for cases not requiring the maximum sensitivity of the 6485.)

To prevent accidental damage, a series resistor should be added to the test setup. The minimum value of this series resistor depends on the lowest current range to be used in the measurement. If it will not be necessary to use the lower measurement ranges, a smaller series resistor can be used, reducing the effect it will have on measurement accuracy. The lowest necessary measurement range can be determined from the measurement range accuracy specs, the applied voltage and largest resistance desired to measure. If using auto range, program the Model 6485 to not use its lowest ranges when autoranging.

To set the auto range lower limit from the front panel:

1. Press the CONFIG key.
2. Press the down range key (▼).
3. Use the ▲ and ▼ range keys to scroll through the available lower limit settings.
4. Press ENTER to save the displayed value as the lower limit. Press EXIT to return to the previous setting.

To set the auto range lower limit over the bus, use [CURRent]:RANGe:AUTO:LLIMit (Section 4).

Use the following formula to determine the minimum resistance for proper current limiting resistors:

$$\mathrm{MinR}_{\mathrm{series}} = \left(\frac{\mathrm{SourceVoltage} - 220\mathrm{V}}{220\mathrm{V}}\right)\mathrm{R}_{\mathrm{in}}$$

Lowest range to be used	**R_{in}**
2nA or 20nA	11MΩ
200nA or 2µA	3.5MΩ
20µA or 200µA	50kΩ
2mA or 20mA	500Ω

The series limiting resistor should have a minimum power rating of:

$$\mathrm{MinPowerRating} = \mathrm{SourceVoltage}^2 / \mathrm{R}_{\mathrm{series}}$$

Example: If measuring 100GΩ resistances using an external voltage source of 500V, and thus, a lowest necessary current range of 20nA, the minimum series resistance that will prevent damage in the case of a shorted resistor would be:

minimum R_{series} = (500V - 220V)/220V×11 MΩ = 14MΩ

minimum power rating = $(500V)^2$/14MΩ =18mW

NOTE *The 14MΩ in series will increase the measured resistance to 100.014GΩ*

The 6485 can be programmed to calculate the resistance and subtract the series resistance. Using the M/X+B function, in the example above, one would set M to 500, B to -14e6, and the units character to “omega”. For more details on the M/X+B function, see Section 5.

Noise and safety shields — Figure 2-4 shows typical measurement shielding. A noise shield is used to prevent unwanted signals from being induced on the picoammeter input. Amps measurements below 1µA may benefit from effective shielding. Typically, the noise shield is connected to picoammeter input LO. Additionally, Figure 2-4 shows LO connected to earth ground via the ground link.

WARNING **The maximum safe voltage between picoammeter LO and chassis ground (common mode voltage) is 42V. The Model 6485 does not internally limit the LO-to-chassis voltage. Exceeding 42V can create a shock hazard.**

If it is possible for the DUT or external supply to present more than 42V to the input HI, it is imperative that the connection between input LO and the external voltage source be sufficiently low impedance and capable of carrying the short-circuit current of the source, in order that the LO not exceed 42V.

CAUTION **The LO to chassis breakdown voltage is 500V. Exceeding this voltage may cause damage to the instrument.**

Figure 2-4
Shielding for measurements (unguarded)

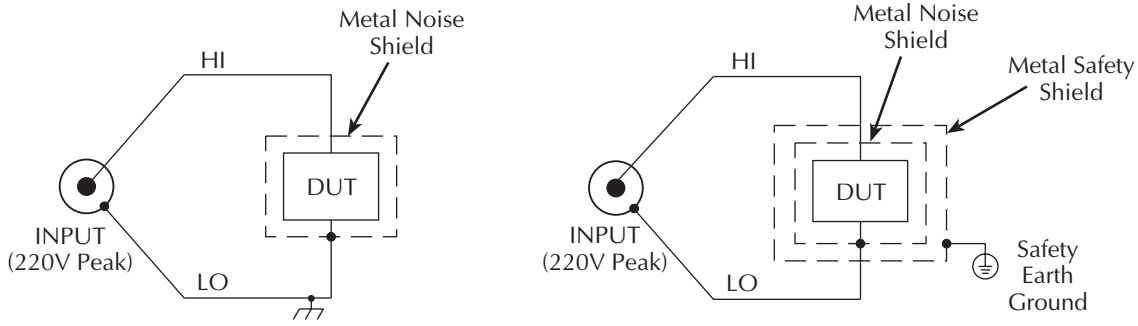

A. Noise Shield **B. Safety Shield**

Input voltage overload (OVRVOLT message)

During normal operation, there should not be a significant voltage between the input HI and LO terminals of the Model 6485. However, occasionally, as in the case of a DUT failure, a customer voltage source can become shorted directly to the Model 6485. Under that condition, protection circuits within the 6485 will limit the current flow for higher current ranges (20µA to 20mA). Additionally, when operating on the 2mA and 20mA ranges or when the 6485 auto ranges up to these ranges as a response to the applied voltage, if the input voltage exceeds 60V, the Model 6485 will change from a current limit to a 1MΩ–3MΩ input impedance to prevent excess power dissipation. The OVRVOLT message will be displayed to indicate the change in the protection circuit. The same information is available with remote operation (see "Measurement event status," page 10-13.)

To return the instrument to normal operation, the over-voltage condition must be removed. Once the input voltage is reduced to under 60V, the protection circuit will return to its current limit operation until the current is reduced to a valid (on-scale) level. Extended operation near, but under 60V, will produce heat inside the instrument and may require time to cool before returning to accurate readings.

Test fixture

Whenever possible, use a shielded low leakage test fixture to make precision measurements. A general purpose test fixture is shown in Figure 2-5. This test fixture will accommodate a variety of connection requirements.

Figure 2-5
General purpose test fixture

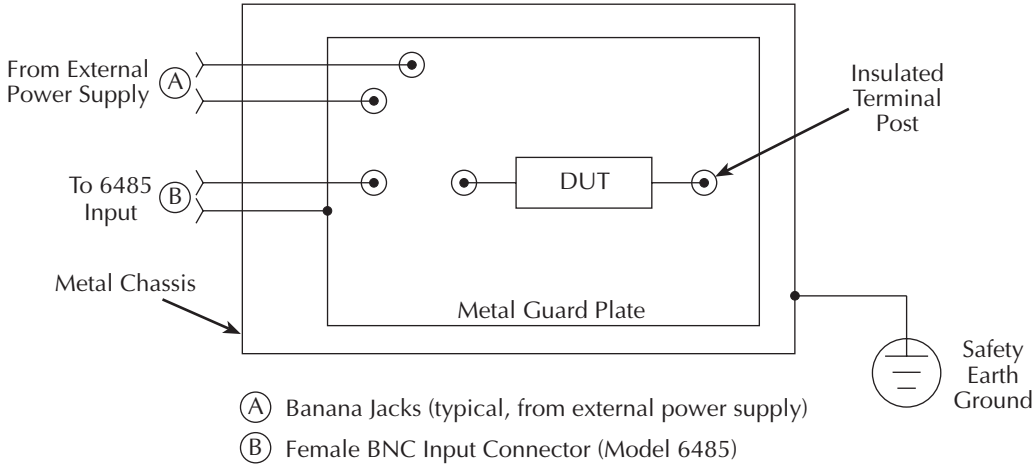

Test fixture chassis

- The chassis of the test fixture should be metal so that it can function as a shield for the DUT or test circuit.
- The test box must have a lid that closes to prevent contact with live circuitry.
- The test fixture must have a screw terminal that is used exclusively for connection to safety earth ground.

WARNING **To provide protection from shock hazards, the test fixture chassis must be properly connected to safety earth ground. A grounding wire (#18 AWG or larger) must be attached securely to the test fixture at a screw terminal designed for safety grounding. The other end of the ground wire must be attached to a known safety earth ground.**

Guard plate

A metal guard plate will provide guarding or noise shielding for the DUT or test circuit. It will also serve as a mounting panel for DUT or test circuits. The guard plate must be insulated with appropriate spacing from the chassis of the test fixture commensurate with the external source used.

Connectors, terminals, and internal wiring

Basic connector requirements include a female BNC connector and two banana jacks. The banana jacks provide for connection to an external power supply. The banana jacks must be insulated from the chassis of the test fixture.

DUT and test circuits are to be mounted on the guard plate using insulated terminals. To minimize leakage, select terminals that use virgin Teflon insulators.

Inside the test fixture, use an insulated wire to connect the shell of the BNC connector to the guard plate (the guard plate will serve as a noise shield).

Handling and cleaning test fixtures

Dust, body oil, solder flux, and other contaminants on connector and terminal insulators can significantly decrease the leakage resistance resulting in excessive leakage currents. Contaminants on DUT and test circuit components can create a leakage path. The leakage currents may be large enough to corrupt low-level measurements.

Handling tips:

- Do not touch the bodies of DUT or test circuit components. If you can not handle them by their leads, use clean cotton gloves to install them in the test fixture.
- Do not touch any connector or terminal insulator.
- If installing a test circuit that is on a PC board, handle the board by the edges. Do not touch any board traces or components.

Cleaning tips:

- Use dry nitrogen gas to clean dust off connector and terminal insulators, DUT, and other test circuit components.
- If you have just built the test fixture, remove any solder flux using methanol along with clean foam-tipped swabs or a clean soft brush. Clean the areas as explained in the next tip.
- To clean contaminated areas, use methanol and clean foam-tipped swabs. After cleaning a large area, you may want to flush the area with methanol. Blow dry with dry nitrogen gas.
- After cleaning, the test fixture (and any other cleaned devices or test circuits) should be allowed to dry in a 122° F (50° C) low-humidity environment for several hours.

Input protection

Model 6485 incorporates protection circuitry against nominal overload conditions. However, a voltage higher than the maximum voltage value for the selected current range, and the resultant current surge could damage the input circuitry.

NOTE *Maximum peak voltage: 220V Peak*

A typical test circuit to measure the leakage current of a capacitor is shown in Figure 2-6. When Switch S is closed, an initial charging current will flow and the high voltage will be seen across the input of Model 6485.

Figure 2-6
Capacitor test circuit without protection

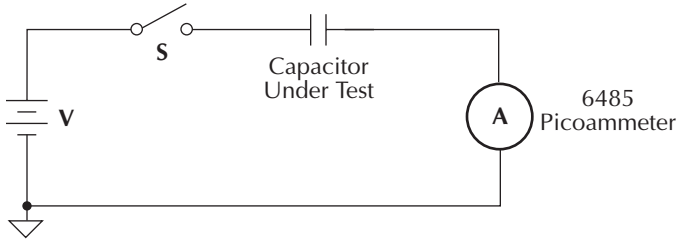

Adding a resistor and two diodes (1N3595) as shown in Figure 2-7 will provide considerable extra protection. The resistor must be large enough to limit the current through the diodes to 20mA or less, and be large enough to withstand the supply voltage. The protection circuit should be enclosed in a light-tight conductive shield.

Figure 2-7
Capacitor test circuit with protection

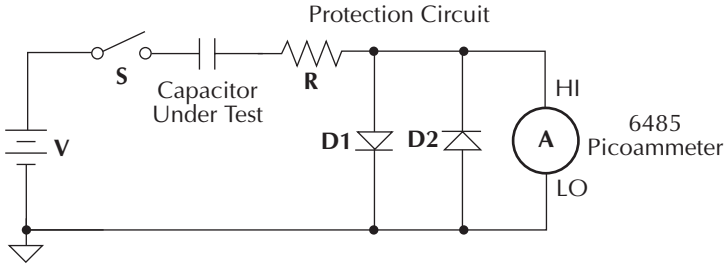

Floating measurements

Figure 2-8 shows an example where Model 6485 floats.

WARNING **Before attempting floating measurements, make sure to have a thorough understanding of any dangers involved. Take adequate precautions before connecting any instruments or power sources. Also, make sure to read and understand information contained in "Connection fundamentals," page 2-3. Death or injury due to electrical shock can result if adequate safety measures are not taken.**

The maximum safe voltage between picoammeter LO and chassis ground (common mode voltage) is 42V. The Model 6485 does not internally limit the LO-to-chassis voltage. Exceeding 42V can create a shock hazard.

If it is possible for the DUT or external supply to present more than 42V to the input HI, it is imperative that the connection between input LO and the external voltage source be sufficiently low impedance and capable of carrying the short-circuit current of the source, in order that the LO not exceed 42V.

CAUTION **Connecting COMMON or ANALOG OUT to earth while floating the input may damage the instrument.**

The LO-to-chassis breakdown voltage is 500V. Exceeding this voltage may cause damage to the instrument.

Figure 2-8
Floating measurements

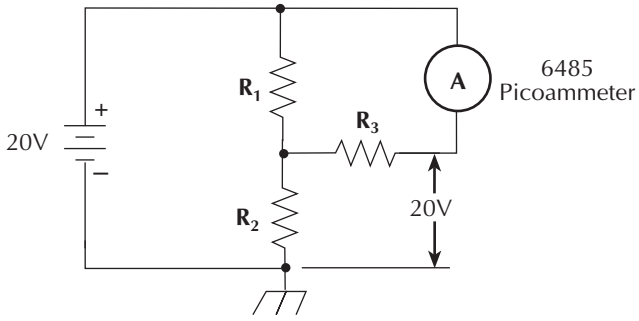

Zero check and zero correct

Table 2-3 lists the display messages associated with zero check and zero correct. The two-character message is displayed along with the reading.

Table 2-3
Display messages for zero check and zero correct

Display Message	Zero Check	Zero Correct
ZC	On	Off
ZZ	On	On
CZ	Off	On

Zero check

When zero check is enabled (on), the input amplifier is reconfigured to shunt the input signal to low as shown in Figure 2-9.

From the front panel, enable / disable zero check by pressing the ZCHK key. Refer to Table 2-4 for bus commands.

Leave zero check enabled when connecting or disconnecting input signals.

Figure 2-9
Equivalent input impedance with zero check enabled

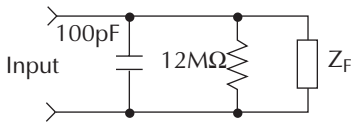

Z_F = 500Ω ||200nF....2 mA, 20 mA
50kΩ || 2nF.....20 µA, 200 µA
5MΩ || 20pF .....200 nA, 2 µA
500MΩ || 5pF ...2 nA, 20 nA

Zero correct

Model 6485 has a zero correct feature to algebraically subtract the voltage offset term from the measurement (to actually reduce the voltage at the input terminals, see the Voltage Offset Correction procedure in Section 16). Perform the following steps to algebraically zero correct the measurement:

NOTE *The ZCOR key toggles zero correct on and off. If zero correct is enabled ("ZZ" or "CZ" message displayed), press ZCOR to disable it.*

1. Enable zero check ("ZC" message displayed).
2. Select the range that will be used for the measurement, or select the lowest range.
3. Press ZCOR to enable zero correct ("ZZ" message displayed).
4. Press ZCHK to disable zero check.
5. Readings can now be taken from the display. The "CZ" message indicates that the displayed reading is zero corrected.

NOTES *With regard to the zero correct feature:*
-Model 6485 will remain zero corrected even if it is upranged. If downranged, re-zero the instrument.
-Model 6485 does not have to be re-zero corrected as long as the ambient temperature remains stable.
-Zero correction cancels the voltage offset term of the amplifier. With both zero check and zero correct enabled, the instrument may not display a perfectly zeroed reading.
-If Model 6485 is operating at, or near T_{CAL}, zero correction will have very little effect. T_{CAL} is the internal temperature of Model 6485 when it was last calibrated.

SCPI programming — zero check and zero correct

Table 2-4
SCPI commands — zero check and zero correct

Commands	Description	Default	Ref	DDC
SYSTem	SYSTem Subsystem:			
:ZCHeck	Zero check:	ON		
[:STATe] <b>	Enable or disable zero check.	OFF	A	
:ZCORrect	Zero correct:			
[:STATe] <b>	Enable or disable zero correct.	OFF	A	C0 (Off) C1 (On)
:ACQuire	Acquire a new zero correct value.		B	
INITiate	Trigger a reading.		B	

A) SYSTem:ZCORrect:ACQuire

The zero correct value can only be acquired while zero check is enabled and zero correct state is off. The internal offset measured at that moment will become the correction value. Zero correction can then be applied and zero check disabled. This acquire method makes it convenient if you need to re-zero the instrument often.

The following command sequence uses the acquire method to zero correct the 200µA range:

```
*RST                        ' Set instrument to known default
                              conditions in one-shot trigger mode.
SYST:ZCH ON                 ' Enable zero check.
CURR:RANG 2E-4              ' Set instrument to 200uA range.
INIT                        ' Trigger one reading.
SYST:ZCOR:ACQ               ' Acquire zero correct value.
SYST:ZCH OFF                ' Disable zero check.
SYST:ZCOR ON                ' Perform zero correction.
```

The INITiate command in the above sequence is used to trigger a reading. This reading is the offset that is acquired as the zero correct value. See Section 7 for more information on INITiate.

NOTE *Sending the :ACQuire command while zero check is disabled will result in an error. The command will not be executed.*

B) SYSTem:ZCORrect[:STATe] <b>

This method to perform zero correction is consistent with the way it is performed from the front panel. That is, zero correction is performed while zero check is enabled. The zero correct state can be turned on and off repeatedly without requiring. If no ACQ has not been performed since the most recent reset, zero is used for the ACQ value.

Measurement considerations

There are a variety of factors to consider when making low level measurements. These considerations are listed and summarized in Table 2-5 and are detailed in Section 3 and Section C. For comprehensive information on all measurement considerations, refer to the Low Level Measurements handbook, which is available from Keithley Instruments.

Table 2-5
Summary of measurement considerations

Considerations	Description
	See Section 3 for details
Input bias current	Offset current of Model 6485 could affect low current measurements.
Voltage burden	Offset voltage of Model 6485 could cause errors if it is high in relation to the voltage of the measured circuit.
Noise	Noise generated by source resistance and source capacitance.
	See Section C for details
Ground loops	Multiple ground points can create error signals.
Triboelectric effects	Charge currents generated in a cable by friction between a conductor and the surrounding insulator (i.e. bending a triax cable).
Piezoelectric and stored charge effects	Currents generated by mechanical stress on certain insulating materials.
Electrochemical effects	Currents generated by the formation of chemical batteries on a circuit board caused by ionic contamination.
Humidity	Reduces insulation resistance on PC boards and test connection insulators.
Light	Light sensitive components must be tested in a light-free environment.
Electrostatic interference	Charge induced by bringing a charged object near your test circuit.
Magnetic fields	The presence of magnetic fields can generate EMF (voltage).
Electromagnetic interference (EMI)	EMI from external sources (i.e. radio and TV transmitters) can affect sensitive measurements.

3
Measurements

- **Measurement overview** — Summarizes the current measurement capabilities of Model 6485 and provides a basic procedure to measure amps.
- **SCPI programming** — Covers the basic SCPI commands.

Measurement overview

Measurements — Model 6485 can make amps measurements from 20fA to 21mA using 8 measurement ranges; 2nA, 20nA, 200nA, 2µA, 20µA, 200µA, 2mA, and 20mA.

NOTE *Accuracy specifications are provided in Appendix A.*

Procedure

WARNING **The maximum safe voltage between picoammeter LO and chassis ground (common mode voltage) is 42V. The Model 6485 does not internally limit the LO to chassis voltage. Exceeding 42V can create a shock hazard.**

If it is possible for the DUT or external supply to present more than 42V to the input HI, it is imperative that the connection between input LO and the external voltage source be sufficiently low impedance and capable of carrying the short-circuit current of the source, in order that the LO not exceed 42V.

CAUTION **The LO to chassis breakdown voltage is 500V. Exceeding this voltage may cause damage to the instrument.**

The maximum input voltage and current to Model 6485 is 220V peak and 21mA. Exceeding either of these values may cause damage to the instrument that is not covered by the warranty.

To achieve optimum precision for low-level current measurements, input bias current and voltage burden can be minimized by performing the offset correction procedure. Information about these offsets are provided in "Measurement considerations,"on page I-2.

NOTE *After overloading with high voltage, it may take several minutes for the input current to drop to within specified limits. Input current can be verified by placing the protection cap on the input BNC connector and then use the ground link to connect COMMON and CHASSIS ground. With the instrument on the 2nA range and zero check disabled, allow the reading to settle until the input bias current is within specifications. The specifications for input bias current are included in the offset portion of the accuracy specification listed in Appendix A.*

Perform the following steps to measure current:

Step 1. Enable zero check

Zero check should always be enabled before making connection changes. The ZCHK key toggles zero check on and off. When on, the “ZC” or “ZZ” message is displayed. See Section 2 for details on zero check.

Step 2. Perform zero correction

To achieve optimum accuracy for low current measurements, it is recommended that you zero correct the picoammeter. (See Section 2 for details on zero correction:)

-Select the 2nA range (which is the lowest range).
-Press the ZCOR key until the “ZZ” message is displayed.

Step 3. Select a manual measurement range or enable auto range

Use the RANGE ▲ and ▼ keys to select a manual measurement range, or press AUTO to enable auto range. With auto range enabled, the instrument will automatically go to the most sensitive range to make the measurement. See Section 4 for details on range.

Step 4. Connect the current to be measured to the picoammeter

Basic connections for measurements are shown in Figure 3-1.

WARNING **A safety shield is advisable whenever floating measurements are being made (see “Floating measurements,” page 2-12). Connections for the safety shield are shown in Figure 3-1. The metal safety shield must completely surround the noise shield or floating test circuit, and it must be connected to safety earth ground using #18 AWG or larger wire.**

NOTE *When not making floating measurements, it is recommended that you ground measurement LO at only one place in the circuit, such as with the ground link connection on the rear panel of the 6485. (See “Ground loops,” page C-2.)*

Fundamental information on making connections to the picoammeter input is provided in Section 2.

Step 5. Disable zero check and take a reading from the display

If the readings are noisy, you may want to use filtering to reduce noise. Use filtering if the noise is caused by a noisy input signal. Filtering is covered in Section 4.

Figure 3-1
Connections for amps

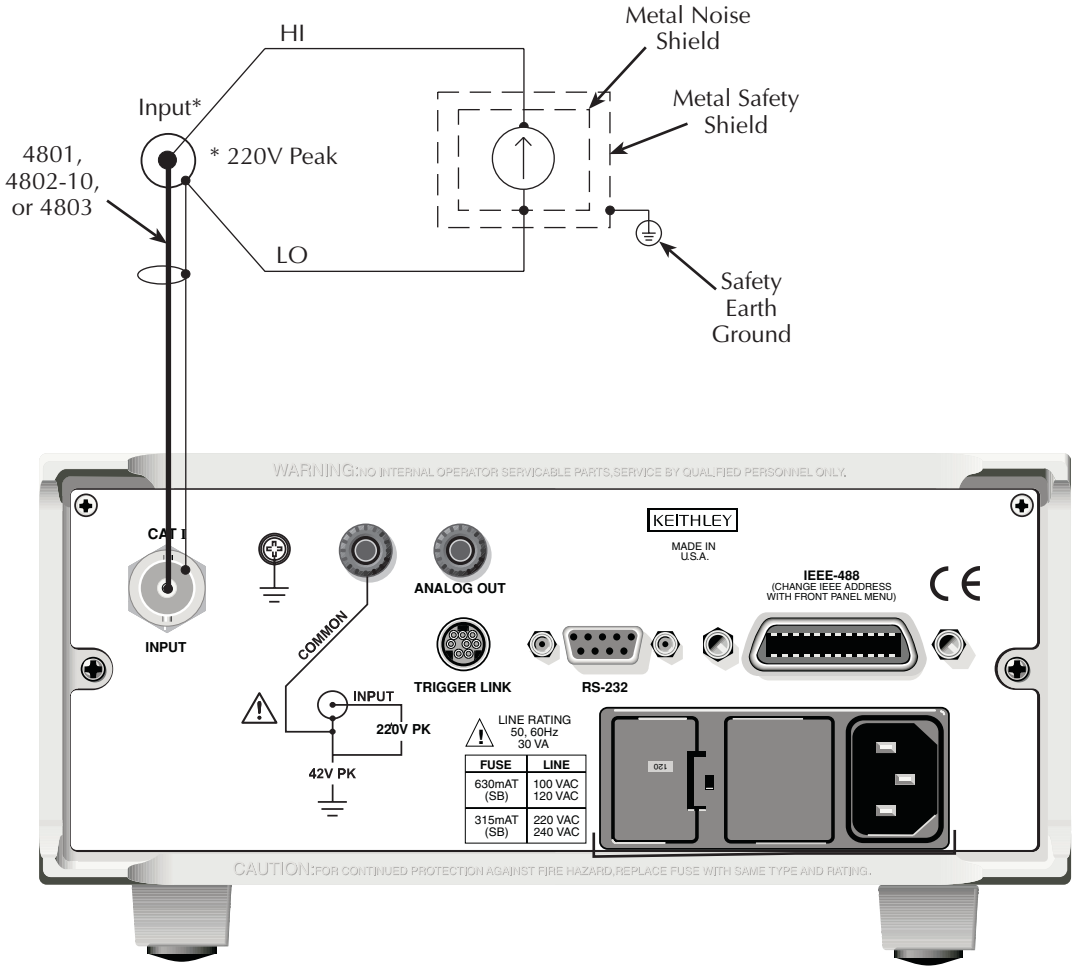

SCPI programming

Table 3-1
SCPI commands — amps function

Commands	Description	Default	Ref
[SENSe]	SENSe Subystem:		
:DATA?	Return latest "raw" reading.		A
INITiate	Trigger one or more readings.		A
READ?	Trigger and return reading(s).		A

A) SENSe:DATA?

This command does not trigger a reading. It simply returns the last "raw" reading string. It will not return the result of any instrument calculation. The reading reflects what is applied to the input.

To return a fresh (new) reading, you can send the INITiate command to trigger one or more readings before sending :DATA?. Details on INITiate are provided in Section 7.

While Model 6485 is busy performing measurements, the :DATA? command will not return the reading string until the instrument finishes and goes into the idle state.

NOTE *The format that the reading string is returned in is set by commands in Table 14-3.*

If there is no reading available when :DATA? is sent, an error (-230) will occur.

The READ? command can be used to return "fresh" readings. This command triggers and returns the readings. See Section 13 for details.

Programming example

The following command sequence will perform one zero corrected amps measurement:

```
*RST                        ' Return 6485 to RST defaults.
SYST:ZCH ON                 ' Enable zero check.
CURR:RANG 2e-9              ' Select the 2nA range.
INIT                        ' Trigger reading to be used as zero
                            ' correction.
SYST:ZCOR:ACQ               ' Use last reading taken as zero
                            ' correct value.
SYST:ZCOR ON                ' Perform zero correction.
CURR:RANG:AUTO ON           ' Enable auto range.
SYST:ZCH OFF                ' Disable zero check.
READ?                       ' Trigger and return one reading.
```

4
Range, Units, Digits, Rate, and Filters

- **Range, units, and digits** — Provides details on measurement range, reading units, and display resolution selection. Includes the SCPI commands for remote operation.
- **Rate** — Provides details on reading rate selection. Includes the SCPI commands for remote operation.
- **Filters** — Explains how to configure and control the digital and median filters. Includes the SCPI commands for remote operation.

Range, units, and digits

Range

The ranges for current measurements are listed in Table 4-1.

Table 4-1
Measurement ranges

nA	µA	mA
2nA	2µA	2mA
20nA	20µA	20mA
200nA	200µA	

The full scale readings for every measurement range are 5% over range. For example, on the 20µA range, the maximum input current is ± 21µA. Input values that exceed the maximum readings cause the overflow message OVRFLOW to be displayed.

Manual ranging

To select a range, press the RANGE ▲ or ▼ key. The instrument changes one range per key-press. If the instrument displays the OVRFLOW message on a particular range, select a higher range until an on-range reading is displayed. Use the lowest range possible without causing an overflow to ensure best accuracy and resolution.

Autoranging

When using autorange, the instrument automatically goes to the most sensitive available range to measure the applied signal. Up-ranging occurs at 105% of range, while down-ranging occurs at the range value. For example, if on the 20µA range, the instrument will go up to the 200µA range when the input signal exceeds 21µA. While on the 200µA range, the instrument will go down to the 20µA range when the input level goes below 20µA.

The AUTO key toggles the instrument between manual ranging and autoranging. The AUTO annunciator turns on when autoranging is selected. To disable autoranging, press AUTO or the RANGE ▲ or ▼ key. Pressing AUTO to disable autoranging leaves the instrument on the present range.

Every time an autorange occurs, a search for every available range of the selected function is performed. The time it takes to perform the search could slow down range change speed significantly. Setting upper and/or lower autorange limits can reduce search time.

NOTE *Range limits and groups are not in effect for manual ranging. Every range is accessible with manual range selection.*

Autorange limits

Search time for amps can be reduced by setting upper and/or lower autorange limits. For example, if you know the maximum input will be around 1µA, set the upper current range limit to 2µA. This eliminates the 20µA, 200µA, 2mA, and 20mA ranges from the search, thereby increasing the range change speed. Should the input exceed 2.1µA, the OVR-FLOW message will be displayed.

Perform the following steps to set upper and/or lower autorange limits.

1. Press CONFIG key (CONFIGURE: will be displayed).
2. Display the desired limit (UPPER or LOWER):
   a. Press the RANGE ▲ key to display the present UPPER range limit.
   b. Press the RANGE ▼ key to display the present LOWER range limit.
3. Scroll through the available range limits using the ▲ and ▼ range keys.
4. Press ENTER when the desired range is flashing.

NOTE *If you attempt to select an incompatible range limit, it will be ignored and TOO LARGE or TOO SMALL will be displayed briefly. For example, if the lower range limit is 20µA, trying to set the upper limit to 2µA will result in the TOO SMALL error.*

Units

Readings can be displayed using engineering (ENG) units (i.e. 1.236 mA) or scientific (SCI) notation (i.e. 1.236E-03A). Perform the following steps to change the units setting:

1. Press MENU key.
2. Scroll down to the UNITS item using the ▲ or ▼ range keys (UNITS: will be flashing).
3. Press ENTER to select setting (ENG or SCI will be flashing).
4. Use the ▲ or ▼ key to display the desired units setting.
5. Press ENTER.

NOTE
1. *The units setting can only be changed from the front panel (no remote operation).*
2. *Scientific notation provides more resolution on small values than engineering units.*

Digits

The DIGITS key sets display resolution for Model 6485. Display resolution can be set from 3 to 6 digits. This single global setting affects display resolution for all measurement ranges.

To set display resolution, press (and release) the DIGITS key until the desired number of digits is displayed.

NOTE *Changing the integration rate does not change display resolution. Also changing display resolution does not change the rate setting.*

SCPI programming — range and digits

Table 4-2
SCPI commands — digits

Commands	Description	Default	DDC
[:CURRent]	Measure current:		
:RANGe	Range selection:		
[:UPPer] <n>	Specify expected reading; -0.021 to 0.021 (A). See Table 4-3.	200µA	R0 (Auto on) Also see Table 4-3.
: AUTO <b>	Enable or disable autorange.	ON	
:ULIMit <n>	Specify upper range limit for autorange: -0.021 to 0.021 (A).	20mA	
:LLIMit <n>	Specify lower range limit for autorange: -0.021 to 0.021 (A).	2nA	
For Digits:	DISPlay Subsystem:		
DISPlay :DIGits <n>	Set display resolution: 4 to 7, where <n> of: 4 = 3 -digit resolution 5 = 4 -digit resolution 6 = 5 -digit resolution 7 = 6 -digit resolution Note: Rational numbers can be used. For example, to set 5 resolution send a value of 4.5 (the 6485 rounds it to 5).	6	

Programming example — range and digits

The following command sequence selects the 20mA range and sets display resolution to 3:

```
*RST                        ' Restore RST defaults.
CURR:RANG 0.02              ' Set to 20mA range.
DISP:DIG 3.5                ' Set display resolution to 3-1/2 digits.
```

Table 4-3
Ranges and values

Range	<n> value	Display (5 -digit resolution)	DDC
20mA	2E-2 or 0.02	00.0000 mA	R8
2mA	2E-3 or 0.002	0.00000 mA	R7
200µA	2E-4 or 0.0002	000.000 µA	R6
20µA	2E-5 or 0.00002	00.0000 µA	R5
2µA	2E-6 or 0.000002	0.00000 µA	R4
200nA	2E-7 or 0.0000002	000.000 nA	R3
20nA	2E-8 or 0.00000002	00.0000 nA	R2
2nA	2E-9 or 0.000000002	0.00000 nA	R1

Rate

The RATE key selects the integration time of the A/D converter. This is the period of time the input signal is measured. The integration time affects the amount of reading noise, as well as the ultimate reading rate of the instrument. The integration time is specified in parameters based on a number of power line cycles (NPLC), where 1 PLC for 60Hz is 16.67msec (1/60) and 1 PLC for 50Hz (and 400Hz) is 20msec (1/50).

In general, Model 6485 has a parabola-like shape for its speed vs. noise characteristics and is shown in Figure 4-1. Model 6485 is optimized for the 1 PLC to 10 PLC reading rate. At these speeds (lowest noise region in the graph), Model 6485 will make corrections for its own internal drift and still be fast enough to settle a step response <100ms.

Figure 4-1
Speed vs. noise characteristics

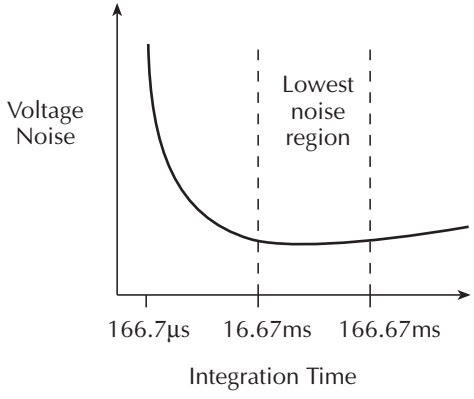

The rate setting is global for all ranges. Therefore, it does not matter what range is presently selected when you set rate.

There are two ways to set rate. You can select slow, medium, or fast by using the RATE key, or you can set the number of power cycles from the NPLC menu that is accessed by pressing CONFIG / LOCAL (while in LOCAL) and then RATE.

:Rate Key — The RATE key selections are explained as follows:

- **SLOW** — Selects the slowest preset integration time (6 PLC for 60Hz or 5 PLC for 50Hz). The SLOW rate provides better noise performance at the expense of speed.
- **MED** — Selects the medium integration time (1 PLC). Select the MED rate when a compromise between noise performance and speed is acceptable.
- **FAST** — Selects the fastest preset integration time (0.1 PLC). Select the FAST rate if speed is of primary importance (at the expense of increased reading noise).

To change the rate setting, press (and release) the RATE key until the desired rate annunciator (SLOW, MED or FAST) is displayed.

NPLC Menu — From this menu you can set rate by setting the PLC value. Perform the following steps to set NPLC:

1. Press CONFIG / LOCAL and then RATE to display the present PLC value.
2. Use the ◀, ▶, ▲, and ▼ keys to adjust to the desired PLC value. Valid values are:
   60Hz operation: 0.01 to 60
   50Hz operation: 0.01 to 50
3. Press ENTER.

NOTE *The SLOW, MED, or FAST annunciator will only turn on if the set PLC value corresponds exactly to the slow (5 or 6 PLC for the respective frequency of 50 or 60Hz), medium (1 PLC) or fast (0.1 PLC) integration rate. For example, with the integration rate set to 2 PLC, none of the rate annunciators will turn on.*

SCPI programming — rate

Table 4-4 contains the path and the command to set rate.

Table 4-4
SCPI commands — rate

Command	Description	Default
[:SENSe] [:CURRent] :NPLCycles <n>	SENSe Subsystem: Specify integration rate; 0.01 (PLCs) to 6.0 (60Hz) or 5.0 (50Hz)	 6.0 (60Hz) 5.0 (50Hz)

Programming example — rate

The following command sets the integration rate for all measurement ranges to 2 PLC:

```
CURR:NPLC 2                ' Set integration rate to 2 PLC.
```

Filters

Filtering stabilizes noisy measurements caused by noisy input signals. The Model 6485 uses two types of filters: median and digital. The displayed, stored or transmitted reading is simply the result of the filtering processes. Note that both the median and digital filters can be in effect at the same time.

With both filters enabled, the median filter operation is performed first. After the median filter yields a reading, it is sent to the stack of the digital filter. Therefore, a filtered reading will not be displayed until both filter operations are completed.

The settings for the filter are global. The MEDN key is used to control the median filter. The AVG key is used to control the digital filter (press CONFIG and then the AVG key to configure). When either the median or digital filter is enabled, the FILT annunciator is on.

Median filter

The median filter is used to determine the "middle-most" reading from a group of readings that are arranged according to size. For example, assume the following readings:

20mA, 1mA, 3mA

The readings are rearranged in an ascending order as follows:

1mA, 3mA, 20mA

From the above readings, it is apparent that 3mA is the median (middle-most) reading. The number of sample readings used for the median calculation is determined by the selected rank (1 to 5) as follows:

Sample readings $= (2 \times R) + 1$

where; R is the selected rank (1 to 5)

For example, a rank of 5 will use the last 11 readings to determine the median; $(2 \times 5) + 1 = 11$. Each new reading replaces the oldest reading, and the median is then determined from the updated sample of readings.

Median filter operation — The median filter operates as a moving type filter. For example, if the median filter is configured to sample 11 readings (Rank 5), the first filtered reading will be calculated (and displayed) after 11 readings are acquired and placed in its filter stack. Each subsequent reading will then be added to the stack (oldest reading discarded) and another median filter reading will be calculated and displayed. The median filter operation will reset (start over) whenever the Zero Check operation is performed or the range is changed.

Median filter control

The MEDN key is a toggle key: it will either enable the median filter (displays MEDIAN ON) or disable the median filter (displays MEDIAN OFF). To configure the median filter:

1. Press the CONFIG key.
2. Press the MEDN key. The present rank will be displayed (flashing).
3. Use the RANGE (▲ or ▼) keys to display the desired rank (1 to 5).
4. Press ENTER to set. To return to the previously set value, press EXIT instead of ENTER.

Digital filter

Digital filter classifications

Model 6485 has two classifications of the digital filter: averaging and advanced. Both are a simple average of one to 100 reading conversions. The difference between them is the user-programmable noise "window" for the advanced filter.

The noise window, which is expressed as a percentage of range (0-105%), allows a faster response time to large signal step changes. A reading conversion outside the plus or minus noise window fills the filter "stack" immediately.

If the noise does not exceed the selected percentage of range, the reading is based on an average of reading conversions. In this case, the advanced filter works the same as the averaging filter. If the noise does exceed the selected percentage, the reading is a single reading conversion, and new averaging starts from this point. The two filter classes are compared in Figure 4-2.

Digital filter types

An additional filter parameter is type (type is either moving or repeating). Filter types are compared in Figure 4-3.

Moving Filter — Every time a reading conversion occurs, the readings in the stack are averaged to yield a single filtered reading. The stack type is first-in, first-out. After the stack fills, the newest reading conversion replaces the oldest. Note that the instrument does not wait for the stack to fill before releasing readings.

Repeating Filter — Takes a selected number of reading conversions, averages them, and yields a reading. It then flushes its stack and starts over.

Figure 4-2
Digital filter; averaging and advanced classifications

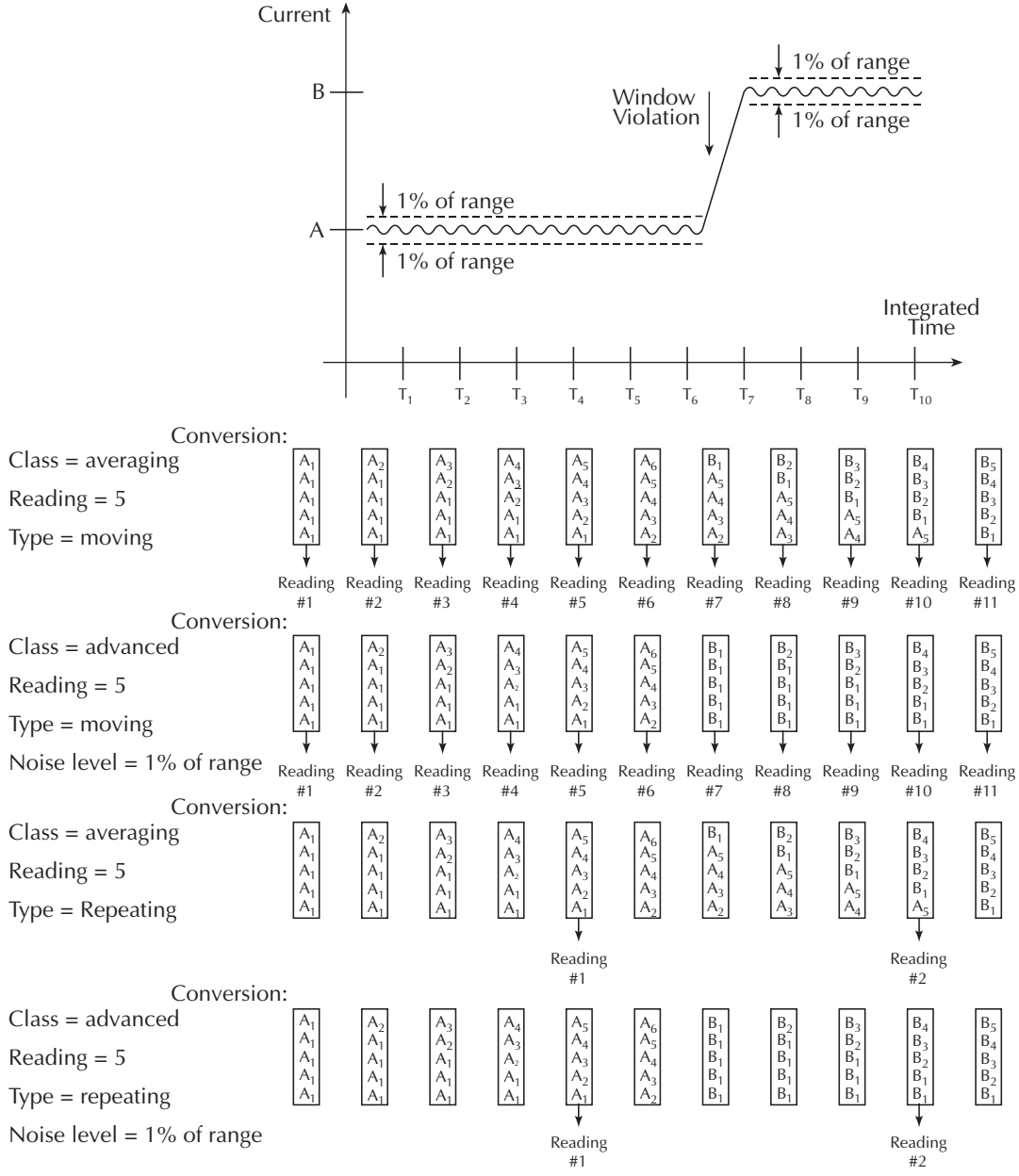

Figure 4-3
Digital filter types; moving and repeating

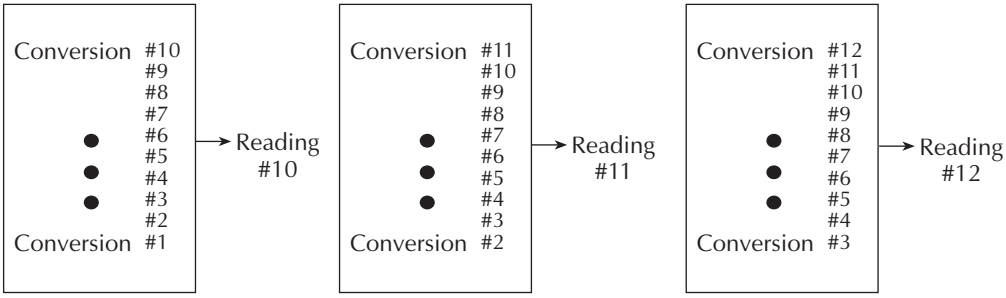

A. Class - Average, Readings = 10, Type - Moving

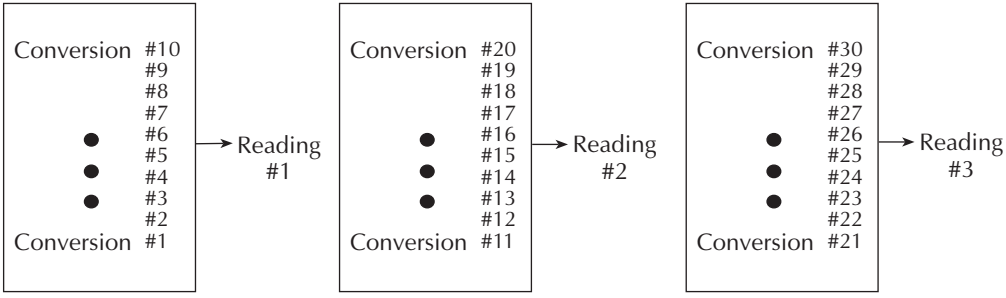

B. Class - Average, Readings = 10, Type - Repeating

Response time

The various filter parameters have the following effects on the time needed to display, store, or output a filtered reading:

- Filter classification: The time to the first reading is the same for both classifications, but thereafter, the moving mode yields a faster reading than repeating mode. Also, advanced has a faster response to changes in the input signal than averaging.
- Number of reading conversions: Speed and noise are tradeoffs.
- Noise window: For the advanced filter, a tradeoff of speed, noise, and response to input signal changes.

Operation consideration

- The digital filter operation will reset (start over) whenever the zero check operation is performed or the range is changed.

Digital filter control

The AVG key is a toggle key: it will either enable the digital filter (displays AVERAGE ON) or disable the digital filter (displays AVERAGE OFF). To configure the median filter:

NOTE *For the following procedure, use the ◀ and ▶ keys and the RANGE ▲ and ▼ keys to set values. The ◀ and ▶ keys provide cursor control, while the ▲ and ▼ keys increment and decrement the value.*

To return to the previously set value and cancel configuration, press EXIT instead of ENTER. Values change immediately when the ENTER key is pressed.

1. Press the CONFIG key.
2. Press the AVG key. The present number of reading conversions to average (filter count) will be displayed (flashing).
3. Set filter count (1 to 100):
   - Use the range keys ▲ or ▼ to display the desired filter count value at the RDGS prompt.
   - Press ENTER to set.
4. Set filter type (REPEAT or MOVING AV):
   - Use the range keys ▲ or ▼ to display the desired filter type at the TYPE: prompt.
   - Press ENTER to set.
5. Enable or disable advanced filter (YES or NO).
   - Use the range keys ▲ or ▼ to display the desired state at the ADVANCED?: prompt.
   - Press ENTER to set.
6. If the advanced filter is enabled (ADVANCED?:YES), enter the noise tolerance level at the NTOL: prompt (0–105.0000%).
   - Use the range keys ◀, ▶, ▲, and ▼, to display the desired value.
   - Press ENTER to set.

SCPI programming — filters

Table 4-5
SCPI commands — filters

Commands	Description	Default
For median filter:		
[:SENSe[1]]	SENSe Subsystem:	
:MEDian	Median Filter:	
:RANK <n>	Specify filter rank; 1 to 5.	1
[:STATe] <b>	Enable or disable median filter.	OFF
For digital filter:		
[:SENSe[1]]	SENSe Subsystem:	
:AVERage	Digital Filter:	
:TCONtrol <name>	Select filter control; MOVing or REPeat.	REP
:COUNt <n>	Specify filter count; 1 to 100.	10
:ADVanced	Advanced filter:	
:NTOLerance <n>	Specify noise tolerance (in %); 0 to 105.	0
[:STATe] <b>	Enable or disable advanced filter.	OFF
[:STATe] <b>	Enable or disable digital filter.	OFF

Programming example

The following command sequence configures and enables both filters:

```
' Median Filter:
MED:RANK 5                  ' Set rank to 5.
MED ON                      ' Enable median filter.

' Digital Filter:
AVER:COUN 20                ' Set filter count to 20.
AVER:TCON MOV               ' Select moving filter.
AVER:ADV:NTOL 30            ' Set noise tolerance to 30%.
AVER:ADV ON                 ' Enable advanced filter.
AVER ON                     ' Enable digital filter.
```

5
Relative, mX+b, m/X+b (reciprocal), and log

- **Relative** — Explains how to null an offset or establish a baseline value. Includes the SCPI commands for remote operation.
- **mX+b, m/X+b (reciprocal), and Logarithmic** — Covers these three basic math operations and includes the SCPI commands for remote operation.

Relative

Relative (Rel) nulls an offset or subtracts a baseline reading from present and future readings. When a Rel value is established, subsequent readings will be the difference between the actual input and the Rel value.

Displayed (Rel'ed) Reading = Actual Input - Rel Value

A Rel value is the same for all measurement ranges. For example, a Rel value of 1E-6 is 1µA on the 2µA range. It is also 1µA on the 20µA range and the 200µA range. Note changing ranges does not disable Rel.

When a Rel value is larger than the selected range, the display is formatted to accommodate the Rel'ed reading. However, this does not increase the maximum allowable input for that range. An over-range input signal will still cause the display to overflow. For example, on the 20µA range, Model 6485 still overflows for a 21µA input.

NOTE *Rel can be used on the result of the mX+b, m/X+b, or LOG calculations. However, Rel will disable whenever a math function is enabled or disabled.*

Setting and controlling relative

From the front panel, there are two ways to set the Rel value. You can use the input reading as the Rel value or you can manually key in the Rel value.

REL key

When the REL key is used to enable Rel, the present display reading is used as the Rel value. Perform the following steps to set a Rel value:

1. Display the reading you want as the Rel value. This could be a zero offset reading that you want to null out, or it could be an applied level that you want to use as a baseline.
2. Press REL. The REL annunciator turns on and subsequent readings will be the difference between the actual input and the Rel value.
3. To disable REL, press the REL key a second time or select a different measurement function. The REL annunciator turns off.

NOTE *When Rel is disabled, the Rel value is remembered. To reinstate the previous Rel value, press CONFIG, then press REL, and finally press ENTER. If the REL is disabled and then REL is pressed again, it will determine and set a new null value.*

Displaying or manually keying in REL

Pressing CONFIG and then REL displays the present Rel value. This displayed Rel value can be enabled (pressing ENTER) or a different Rel value can be entered and enabled.

1. Press CONFIG and then REL. The present Rel value will be displayed.
2. To change the Rel value, use the ◀, ▶, ▲ and ▼ keys and change the value. To change Rel polarity, place the cursor on the polarity sign and press ▲ or ▼. To change the Rel range, place the cursor on the range symbol (at the end of the reading) and use the ▲ and ▼ keys (Table 5-1).
3. With the desired Rel value displayed, press ENTER to enable Rel.

Table 5-1
Range symbols for rel values

Symbol	Prefix	Exponent
p	pico-	10^{-12}
n	nano-	10^{-9}
µ	micro-	10^{-6}
m	milli-	10^{-3}
^	(none)	10^{0}
K	kilo-	10^{3}
M	mega-	10^{6}
G	giga-	10^{9}
T	tera-	10^{12}

SCPI programming — relative

Table 5-2
SCPI commands — relative (null)

Commands	Description	Default	Ref	DDC
CALCulate2	Path to configure and control limit testing (CALC2):			
:FEED <name>	Specify reading to Rel; SENSe[1] or CALCulate[1].	SENS	A	
:NULL	Configure and control Relative.			
:ACQuire	Use input signal as Rel value.			Z1
:OFFSet <NRf>	Specify Rel value; -9.999999e20 to 9.999999e20.	0.0		
:STATe <b>	Enable or disable Rel.	OFF	B	Z0 (Off)
:DATA?	Return Rel'ed readings triggered by INITiate.		C	
:LATest?	Return only the latest Rel'ed reading.		C	
INITiate	Trigger one or more readings.			

A) :FEED <name> Specify reading to Rel

With SENSe[1] selected, the Rel operation will be performed on the input signal. With CALCulate[1] selected, the Rel operation will be performed on the result of the mX+b or m/X+b calculation.

B) :STATe <b> Toggle state of Rel

This command toggles the state of Rel without acquiring new values. This operation is different than the REL key from front panel (which toggles the Rel state) — the front panel key acquires new values when pressed (unless CONFIG is pressed first). If a NULL value has not been acquired before enabling Rel, 0.000000E+00 will be used.

C) :DATA? and :DATA:LATest?

With Rel enabled, these commands will return one or more Rel'ed readings. They will not trigger fresh (new) readings. Use the INITiate command to trigger new readings (see Section 7 for details on INITiate).

If the instrument is programmed to perform a finite number of measurements, the :DATA? command will return all the Rel'ed readings after the last reading is taken. The :DATA:LATest? command will only return the last (latest) Rel'ed reading.

If the instrument is programmed to perform an infinite number of measurements (arm count or trigger count set to infinite), you cannot use the :DATA? command to return Rel'ed readings. However, you can use the :DATA:LATest? command to return the last Rel'ed reading after aborting the measurement process. After sending the INITiate command to start the measurement process, use the ABORt command to abort the measurement process, then use :DATA:LATest? to return to the last Rel'ed reading.

Programming example — relative

This program fragment establishes a 1µA baseline for measurements:

```
CALC2:NULL:OFFS 1e-6        ' Set Rel value of 1µA.
CALC2:NULL:STAT ON          ' Enable Rel.
CALC2:FEED SENS             ' Rel input signal.
INIT                        ' Trigger reading(s).
CALC2:DATA?                 ' Request Rel'ed reading.
```

mX+b, m/X+b (reciprocal), and Logarithmic

mX+b and m/X+b

The following math operations manipulate normal display readings (X) mathematically according to the following calculations:

Y = mX+b

Y = m/X+b

where: X is the normal display reading
m and b are user-entered constants for scale factor and offset
Y is the displayed result

NOTE *Changing the "m" or "b" for mX+b also changes it for m/X+b.*

Pressing the mX + b key toggles the state of the mX+b math calculation on or off. When pressed, the MATH annunciator will toggle in addition to the presently selected units designator (default is an "X") indicating the state of the mX+b math function (note that the m/X+b calculation uses the same designator as selected for the mX+b calculation).

Configuring and controlling mX+b and m/X+b

To configure and control either of these math calculations, perform the following steps:

NOTE *Enabling or disabling by pressing the mX+b key disables Rel (if Rel is enabled).*

1. Press CONFIG and then MX+B (or M/X+B) to display the present scale factor:
   M: +1.0000000 ^ (factory default)

2. Key in a scale factor value. The ◀ and ▶ keys control cursor position and the ▲ and ▼ range keys increment and decrement the digit value. To change range, place the cursor on the range symbol and use the ▲ and ▼ keys. With the cursor on the polarity sign, the ▲ and ▼ keys toggle polarity.

NOTE *Range symbols are defined in Table 5-1.*

3. Press ENTER to enter the M value and display the offset (B) value:
   B: +00.000000 P (factory default)
4. Key in the offset value.
5. Press ENTER to set the B value and display the one-character UNITS designator:
   UNITS: X (factory default)

NOTE *The configuration for mX+b calculations consists of a units designator, a value for M, and a value for B. This configuration is used for both the mX+b and the m/X +b calculations. Therefore, changing either configuration (of the mX+b or the m/X+b calculation) also changes the other calculation's configuration.*

6. To change the units designator (default is "X", press the ▶ cursor key, and use the ▲ and ▼ range keys. The character can be any letter in the alphabet (A through Z).
7. Press ENTER. The MATH annunciator and the units designator will turn on, and the result of the calculation will be displayed. Note that the calculation will be applied to all measurement functions.

Logarithmic

This calculation converts input readings to logarithm base 10 values. The calculation is performed as follows:

$$\log_{10} X = Y$$

where: X is the input reading
y is the logarithmic result

For example: Assume that exactly 1mA is being measured by the Model 6485.

$$\log_{10} 1.000000\text{mA} = -3$$

NOTE *This calculation uses the absolute value of the normal input reading as the log of a negative number cannot be computed.*

SCPI programming — mX+b, m/X+b, and log

Table 5-3
SCPI commands — mX+b, m/X+b, and log

Commands	Description	Default	Ref	DDC
CALCulate[1]	CALCulate1 Subsystem:			
:FORMat <name>	Select calculation; MXB, RECiprocal, or LOG10.	MXB		D1 (LOG10)
:KMATh	Path to configure mX+b and m/X+b:			
:MMFactor <n>	Specify scale factor (M) for mX+b and m/X+b; -9.99999e20 to 9.99999e20.	1.0		
:MBFactor <n>	Specify offset (B) for mX+b and m/X+b; -9.99999e20 to 9.99999e20.	0.0		
:MUNits <name>	Specify units for mX+b or m/x+b result: 1 character: A–Z, ‘[‘=Ω, ‘\’=°, ‘]’=%.	X		
:STATe <b>	Enable or disable the selected calculation.	OFF		D0 (Off)
:DATA?	Returns all CALC1 results triggered by the INITiate.		A	
:DATA:LATest?	Returns only the latest CALC1 reading.		A	

A) :DATA? and :DATA:LATest?

The INITiate command must be sent to trigger the measurements and calculations. The number of calculations depend on how many measurements the instrument is programmed to perform.

If the instrument is programmed to perform a finite number of measurements, the :DATA? command will return all the CALC1 readings after the last reading is taken. The :DATA:LATest? command will only return the last (latest) CALC1 reading.

If the instrument is programmed to perform an infinite number of measurements (arm count or trigger count set to infinite), you cannot use the :DATA? command to return CALC1 readings. However, you can use the :DATA:LATest? command to return the last CALC1 reading after aborting the measurement process. After sending the INITiate command to start the measurement process, use the ABORt command to abort the measurement process, then use :DATA:LATest? to return the last CALC1 reading.

Programming example — mX+b

This command sequence performs a single mX+b calculation and displays the result on the computer CRT:

```
*RST                        'Restores RST defaults.
CALC:FORM MXB               'Selects mX+b calculation.
CALC:KMAT:MMF 2             'Sets scale factor (M) to 2.
CALC:KMAT:MBF 0.5           'Sets offset (B) to 0.5.
CALC:STAT ON                'Enables calculation.
INIT                        'Perform one measurement and
                            'calculate mX+b.
CALC:DATA?                  'Request mX+b result.
```

6
Buffer

- **Buffer operations** — Explains how to store and recall readings including buffer statistics.
- **SCPI programming** — Covers the SCPI commands used to control buffer operations.

Buffer operations

Model 6485 has a buffer to store from one to 2500 readings. It also stores overflow readings. Each reading has a timestamp. The timestamp for each reading is referenced to the time the measure/store process is started. In addition, recalled data includes statistical information (maximum, minimum, peak-to-peak, average and standard deviation).

The buffer fills with the specified number of readings and stops. Readings are placed in the buffer after any filters and/or math operations have been performed. Math operations include relative, mX+b, m/X+b, LOG, or limits.

Buffered data is overwritten each time the storage operation is selected. The data is volatile — it is not saved through a power cycle.

Measurement function changes are permissible during the storage process. Note however, that the statistics will be based on the readings of the different measurement functions.

Store

Perform the following steps to store readings:

1. Set up the instrument for the desired configuration.
2. Press CONFIG (CONFIGURE: will be displayed).
3. Press STORE. The present buffer size (in readings) is displayed.
4. Use the cursor keys ◀ and ▶, and the RANGE keys ▲ and ▼ to set the number of readings to store (1 to 2500).
5. Press ENTER to save the buffer size. Press the STORE key. If in the immediate trigger mode, the storage process will start immediately. If in the external input trigger mode, each input trigger (or press of TRIG key) will store a reading. See Section 7 for information on triggering.

NOTE *The asterisk (*) annunciator turns on to indicate that the data storage operation is enabled. It will turn off when the storage process is finished (buffer full).*

Figure 6-1
Buffer locations

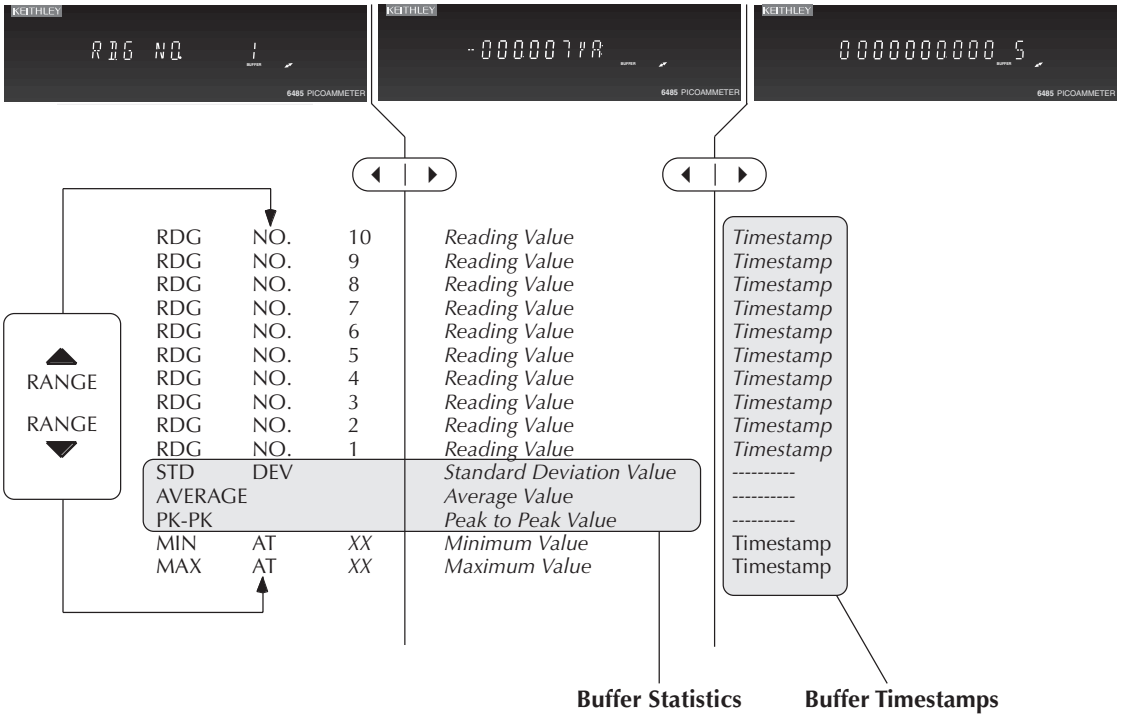

Recall

Perform the following steps to view stored readings and buffer statistics:

1. Press RECALL. The message RDG NO. 1 is displayed. Note that the arrow annunciator (↔) also turns on to indicate that additional data is available for viewing.
2. Use the RANGE keys ▲ and ▼, and the cursor keys ◀ and ▶, to navigate through the reading numbers and buffer statistics, reading values, and timestamps (shown in Figure 6-1). For information on how to set buffer timestamps, see "Buffer timestamps," page 6-4.
3. Press EXIT to return to the normal display.

Buffer timestamps

Use the TSTAMP: menu item to change the timestamp format. To access the menu:

1. Press MENU.
2. Scroll to the TSTAMP: menu item using RANGE keys ▲ and ▼.
3. Press ENTER.
4. Using RANGE keys ▲ and ▼, select desired setting. Available options are ABS (absolute) or DELT (delta).
5. ABS: each timestamp is referenced to the first reading stored in the buffer. The first reading always has a timestamp of 0000000.0000.
6. DELT: each timestamp provides the time between the readings.

Buffer statistics

- **MIN** and **MAX** provides the minimum and maximum readings stored in the buffer. It also indicates the buffer location of these readings.
- The **PK-PK (peak-to-peak)** value is the difference between the maximum and minimum readings stored in the buffer:

  PK-PK = MAX - MIN
- **Average** is the mean of the buffer readings. Mean is calculated as follows:

$$y = \sum_{i=1}^{n} \frac{X_i}{n}$$

Where: X_i is a stored reading
n is the number of stored readings

- The **STD DEV** value is the standard deviation of the buffered readings. Standard deviation is calculated as follows:

$$y = \sqrt{\frac{\sum_{i=1}^{n} (Avg - X_i)^2}{n-1}}$$

Where: $\mathbf{X_i}$ is a stored reading
n is the number of stored readings
Avg is the mean of the buffer readings.

NOTE *If any readings stored in the buffer are the result of an overflow or overvoltage condition, the buffer statistics calculation will not be performed. Buffer recall via front panel operation will show a series of dashes in place of the requested buffer statistics value. In remote operation, the corresponding buffer statistics will be represented by the value +9.91e37.*

SCPI programming

Commands associated with buffer operation are listed in Table 6-1. The TRACe commands are used to store and recall readings in the buffer. The FORMat:ELEMents command is used to specify which data elements to include in the response message for TRACe:DATA? (which is the command to read the buffer). The CALCulate3 commands are used to obtain statistics from the buffer data.

NOTE *The Model 6485 uses IEEE-754 floating point format for statistics calculations.*

Table 6-1
SCPI commands — buffer

Commands	Description	Default	Ref
:TRACe	TRACe Subsystem:	See Note	
:CLEar	Clear readings from buffer.		
:FREE?	Query bytes available and bytes in use.		A
:POINts <n>	Specify number of readings to store; 1 to 2500.	100	
:ACTual?	Returns number of readings actually stored in buffer.		
:FEED <name>	Select source of readings; SENSe[1], CALCulate[1] or CALCulate2.	SENS1	B
:CONTrol <name>	Select buffer control mode; NEVer or NEXT.	NEV	C
:TSTamp	Timestamp:		
:FORMat <name>	Select timestamp format; ABSolute or DELTa.	ABS	D
:DATA?	Read all readings in buffer.		E
:FORMat	FORMat Subsystem:		Section 13
:ELEMents <list>	Specify data elements for :TRACe:DATA? response message; READing, UNITs, TIME and STATus. On *RST or SYSTem:PRESet, resets to default values.	All 4	F
:CALCulate3	CALCulate3 Subsystem:		
:FORMat <name>	Select buffer statistic; MINimum, MAXimum, MEAN, SDEViation or PKPK.	MEAN	G
:DATA?	Read the selected buffer statistic.		H

Note: SYSTem:PRESet and *RST have no effect on :TRACe commands. The listed defaults are power-on defaults.

A) TRACe:FREE?

Two values, separated by commas, are returned. The first value indicates how many bytes of memory are available, and the second value indicates how many bytes are reserved to store readings.

B) TRACe:FEED <name>

Name parameters:

- SENSe — Raw input readings are stored in the buffer.
- CALCulate1 — The results of the mX+b, m/X+b, or log calculation are stored in the buffer. See Section 5 for information on mX+b, m/X+b, or log.
- CALCulate2 — Test limit or Rel readings are stored in the buffer. See Section 8 for information on limit tests.

C) TRACe:FEED:CONTrol <name>

Name parameters:

- NEXT — Enables the buffer and turns on the asterisk (*) annunciator. After the buffer stores the specified number of readings, the asterisk annunciator turns off.
- NEVer — Disables the buffer.

D) TRACe:TSTamp:FORMat <name>

Name parameters:

- ABSolute — Each timestamp is referenced to the first reading stored in the buffer.
- DELTa — Timestamps provide the time between each buffer reading.
- The timestamp data element can be included with each buffer reading (see Ref F).

E) TRACe:DATA?

1. The response message will include one to four data elements for each stored reading. Use the FORMat:ELEMents command (see Ref F) to specify the elements.
2. Reading an empty buffer will result in the “ERROR: -230” display message.
3. Buffer data can be sent in the binary format. (See Table 14-3, Table , “FORMat command summary,” on page 5 for details).

F) FORMat:ELEMents <list>

List parameters:

- READing — Includes the buffer reading in each data string.
- UNITs — identifies amps or math units.
- TIME — Includes the timestamp for each reading. Timestamp can be in the absolute or delta format (see Ref D).

- STATus — Includes a status word for each reading. It provides status information on instrument operation. (See Table 14-3.)
- At least one data element must be in the list. Listed elements must be separated by a comma (i.e. FORMat:ELEMents, READing, TIME). Elements not listed will not accompany the response message for TRACe:DATA?. Data in the response message will be in order of the listed data elements set by this command.

G) CALCulate3:FORMat <name>

This command selects the statistic to be returned by CALCulate3:DATA? (see Ref H). Name parameters:

- MINimum — Select the lowest reading stored in the buffer.
- MAXimum — Select the largest reading stored in the buffer.
- MEAN — Select the mean average statistic for the readings stored in the buffer.
- SDEViation — Select the standard deviation statistic for the readings stored in the buffer.
- PKPK — Select the peak-to-peak statistic for readings stored in the buffer. Peak-to-Peak is calculated as follows: PKPK = MAXimum - MINimum.

H) CALCulate3:DATA?

1. If the number of data points in the buffer is one or none, CALCulate3:DATA? will result in an error (-230).
2. If there is a lot of data in the buffer, some statistic operations may take too long and cause a bus time-out error. To avoid this, send calc3:data? and then wait for the MAV (message available) bit in the Status Byte Register to set before addressing the Model 6485 talk (Section 11).

Programming example

The following program fragment stores 20 readings into the buffer and then calculates the mean average on the buffer readings:

```
' Select data elements:
*RST                        ' Return 6485 to RST defaults.
FORM:ELEM READ,TIME         ' Select reading and timestamp.

' Store and Recall Readings:
TRIG:COUN 20                ' Set trigger model to take to 20
                              readings.
TRAC:POIN 20                ' Set buffer size to 20.
TRAC:FEED SENS              ' Store raw input readings.
TRAC:FEED:CONT NEXT         ' Start storing readings.
INIT                        ' Trigger readings
                            ' setup to SRQ on buffer full - see
                            ' Figure G-2 for example
TRAC:DATA?                  ' Request all stored readings.

' Acquire Mean Statistic for Buffer Readings:
CALC3:FORM MEAN             ' Select mean statistic.
CALC3:DATA?                 ' Request mean statistic.
```

7 Triggering

- **Trigger models** — Explains the various components of the trigger models which control the triggering operations of the instrument. Also explains how to configure the trigger model from the front panel.
- **SCPI programming** — Includes the commands used to configure the trigger model and the commands to control the measurement process.
- **External triggering** — Explains external triggering which allows Model 6485 to trigger other instruments and be triggered by other instruments.

Trigger models

The flowcharts in Figure 7-1 and Figure 7-2 summarize triggering for Model 6485. They are called trigger models because they are modeled after the SCPI commands to control triggering (operation)

Figure 7-1
Trigger model — front panel operation

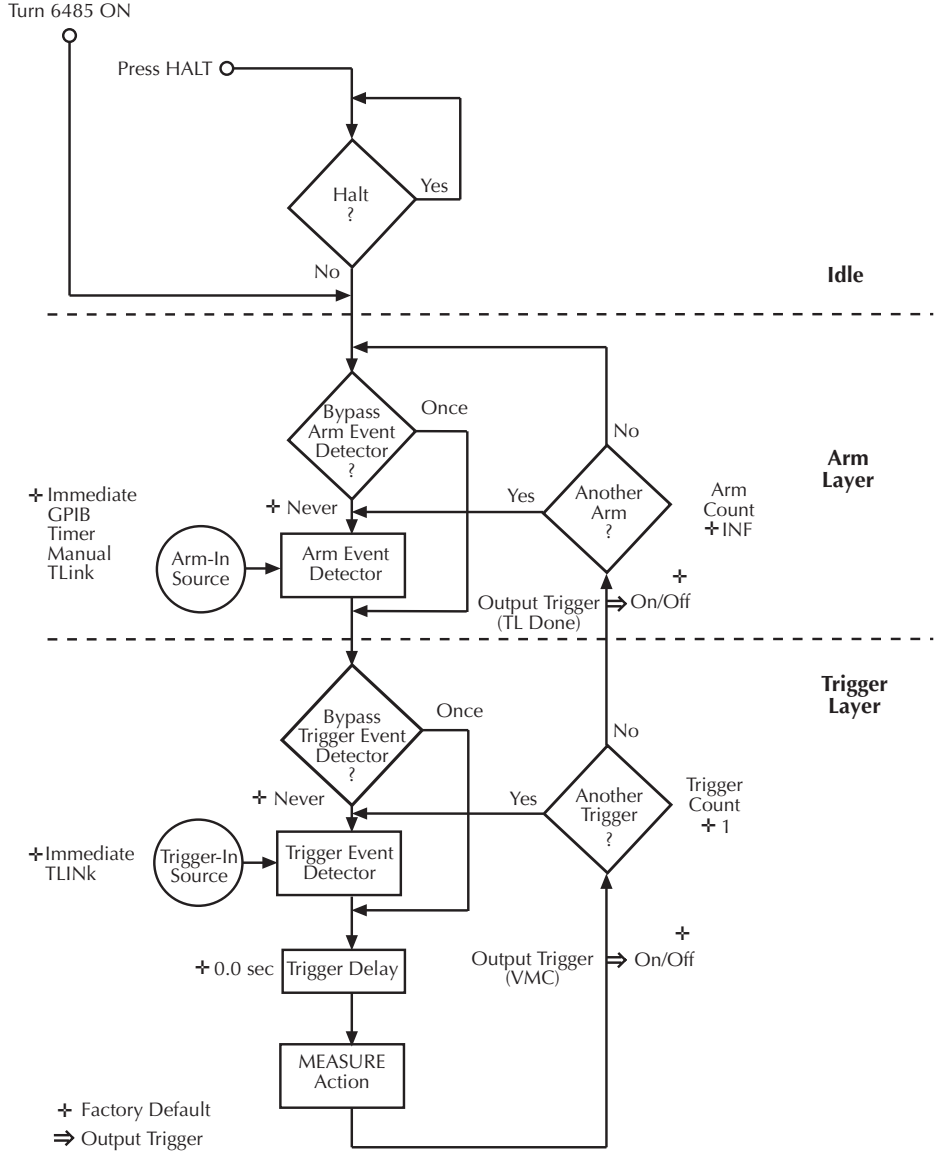

Figure 7-2
Trigger model — remote operation

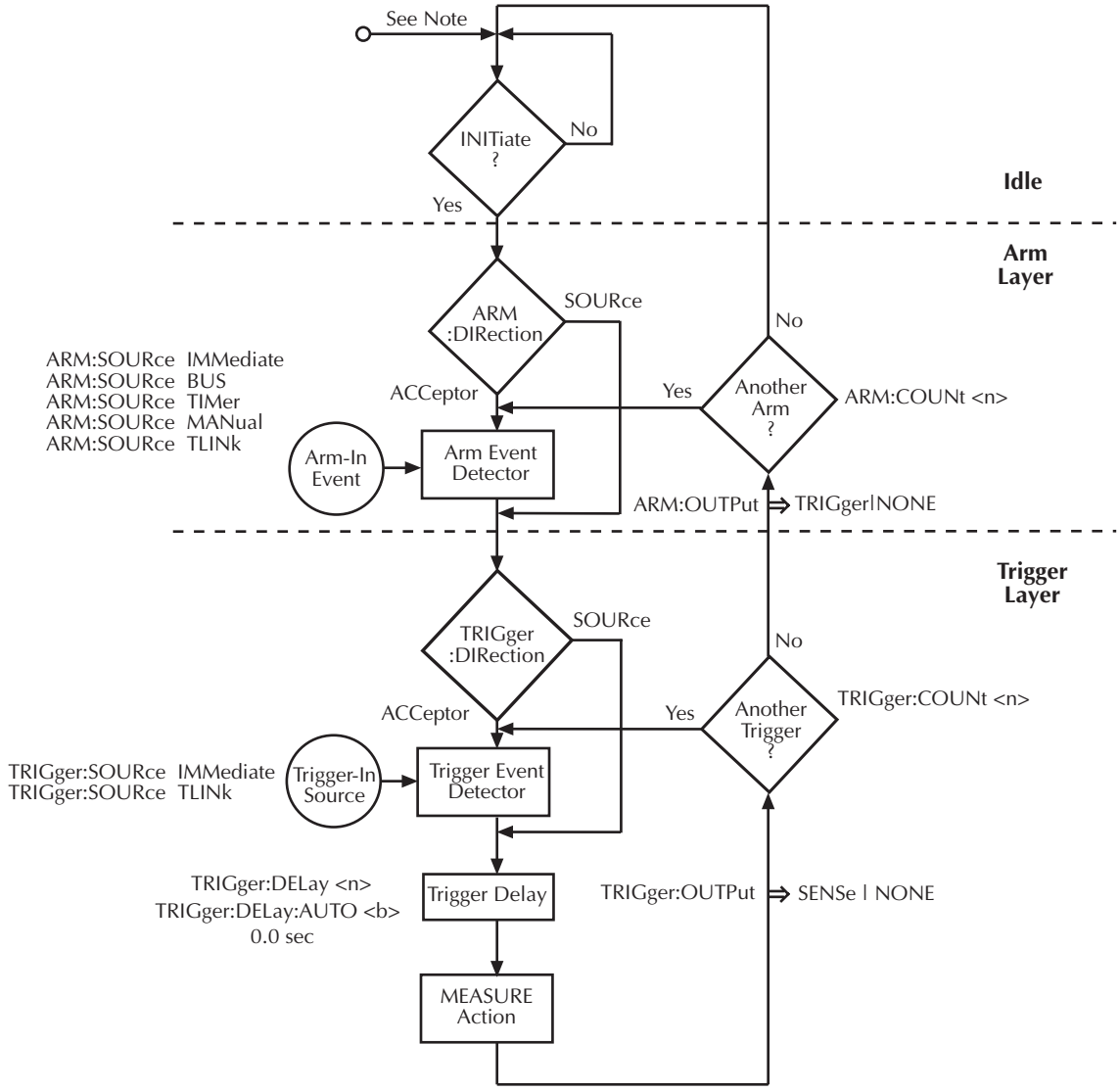

Note: The following commands place the Model 6485 into idle: ABORt, *RST, SYSTem:PRESet, *RCL <NRf>, DCL, and SDC.

⇨ = Output Trigger

The difference between front panel operation (Figure 7-1) and remote operation (Figure 7-2) is within the idle state of the instrument. Nomenclature in Figure 7-1 relates to the various names used for configuration menu items while Figure 7-2 provides the SCPI commands to control operation.

Idle and initiate

While in the idle state, the instrument cannot perform measurements. While in idle, the reading remains frozen or dashes replace the reading (i.e. -.------ A). Once Model 6485 is taken out of idle, operation proceeds through the trigger model.

Front panel operation — As shown in Figure 7-1, Model 6485 immediately leaves the idle state when it is turned on. Typically, operation remains in the arm and trigger layers of the trigger model. However, Model 6485 can be put into the idle state at any time by pressing the HALT key. To take the instrument out of idle, press the TRIG key. Other front panel keys can be pressed instead, but they may change the setup.

Remote operation — As shown in Figure 7-2, an initiate command is required to take the instrument out of idle. The following commands perform an initiate operation:

- INITiate
- READ?
- MEASure?

While operating within the trigger model (not in idle), most commands will not be executed until the instrument completes all of its programmed operations and returns to the idle state. The IFC, SDC and DCL commands can be executed under any circumstance while operating within the trigger model. They will abort any other command or query.

The following commands can be executed while operating within the trigger model except when a READ? or MEASure? is being processed.

- ABORt
- SYSTem:PRESet
- *TRG or GET
- *RST
- *RCL <NRf>

NOTE *For fastest response, use SDC or DCL to return to idle (see Section 10 for details on general bus commands).*

Trigger model operation

Once the instrument is taken out of idle, operation proceeds through the trigger model to perform a measurement (measure action).

NOTE The following discussion focuses on the front panel trigger model (Figure 7-1). However, equivalent SCPI commands are included where appropriate.

Event detectors and control sources

A control source holds up operation until the programmed event occurs and is detected. Note that there are two detector bypasses. A bypass around a detector is only enabled if the appropriate TLink control source is selected. See TLink control source (Arm-In and Trigger-In) as follows for details.

Arm-In source — The Arm-In control sources are explained as follows:

- **Immediate** (ARM:SOURce IMMediate) — Event detection for the arm layer is satisfied immediately allowing operation to continue into the trigger layer.
- **GPIB** (ARM:SOURce BUS) — Event detection for the arm layer is satisfied when a bus trigger (GET or *TRG) is received by Model 6485.
- **Timer** (ARM:SOURce TIMer) — Event detection for the arm layer is immediately satisfied after the instrument leaves the idle state. Detection for each subsequent pass is satisfied when the programmed timer interval elapses. The timer resets to its initial state when the instrument goes back into idle.
- **Manual** (ARM:SOURce MANual) — Event detection for the arm layer is satisfied by pressing the TRIG key. Model 6485 must be in the local mode for it to respond to the TRIG key. Press LOCAL or send LOCAL 14 over the bus to place Model 6485 in local.
- **TLink** (ARM:SOURce TLINk) — Event detection for the arm layer is satisfied when an input trigger via the TRIGGER LINK connector is received by Model 6485. Note that if the source bypass is set to ONCE (ARM:DIRection SOURce), operation will initially loop around the source detector after the instrument leaves the idle state. Detection for each subsequent pass is satisfied by an input trigger. The bypass resets when the instrument goes into idle.

Trigger-In source — The Trigger-In control sources are explained as follow:

- **Immediate** (TRIGger:SOURce IMMediate) — Event detection for the trigger layer is satisfied immediately allowing operation to continue to perform a measurement.
- **TLink** (TRIGger:SOURce TLINk) — Event detection for the trigger layer is satisfied when an input trigger via the TRIGGER LINK connector is received by Model 6485. Note that if the source bypass is set to ONCE (TRIGger:DIRection SOURce), operation will loop around the source detector on the initial pass through the arm layer. Detection for each subsequent pass is satisfied by an input trigger. The bypass resets when Model 6485 leaves the trigger layer.

Trigger delay

A programmable delay is available after event detection. It can be set manually (0 to 999.9998 seconds) or an auto delay can be used. With auto delay selected, the Model 6485 automatically sets delay according to range. The auto delay settings are listed in Table 7-1.

Table 7-1
Auto delay settings

Range	Delay
2nA	10ms
20nA	10ms
200nA	10ms
2µA	10ms
20µA	5ms
200µA	5ms
2mA	1ms
20mA	0.5ms

Measure action

The measure action block of the trigger model is where a measurement is performed. However, if the repeating filter is enabled (see Figure 7-3), the instrument samples the specified number of reading conversions to yield single filtered reading. Only one reading conversion is performed if the digital filter is disabled, or after the specified number of reading conversions for a moving average filter is reached.

Figure 7-3
Measure action block of trigger model

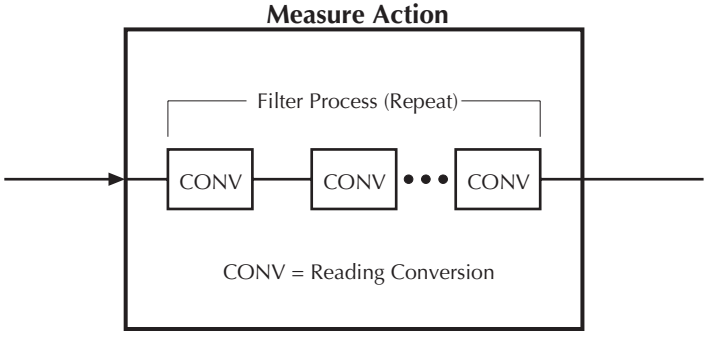

Output triggers

Model 6485 can send out an output trigger (via the rear panel TRIGGER LINK connector) right after the measure action and/or when operation leaves the trigger layer. An output trigger can be used to trigger another instrument to perform an operation (e.g., select the next output step for a source).

Counters

Programmable counters are used to repeat operations within the trigger model layers. For example, if the trigger count is set for 10, operation will keep looping around in the trigger layer until 10 measurements are performed. If the arm count is set to 2, operation will then loop back through the arm layer and go back into the trigger layer to perform 10 more measurements.

Trigger model configuration — front panel

NOTE *See "SCPI Programming" (Table 7-3) for the SCPI commands to configure the trigger model over the bus.*

Press CONFIG and then TRIG to configure both the TRIG and ARM layers of the trigger model.

NOTE *When done configuring the trigger level, press ENTER to confirm value and then use the EXIT key to save changes and leave trigger model configuration.*

Once in trigger model configuration mode, use the ▲ and ▼ range keys to display either the TRIGGER layer or the ARM layer menus. Press ENTER to select the desired menu. Then use the ▲ and ▼ range keys to display menu items. Use the cursor (◀ and ▶) and the ▲ and ▼ keys to key in values. A menu item or value is selected by pressing ENTER. Use the EXIT key to exit from the menu (saving all changes made).

Table 7-2
Trigger model menu structure

Menu	Description
CONFIG	Path to TRIG and ARM menus. Access by pressing CONFIG and then TRIG.
- **TRIG**	Path to TRIG layer sub-menus
- - **COUNT**	Set TRIG measure count
- - - INF	Specify an INFinite measure count
- - - FIN	Specify a FINite measure count: 1–2500

Table 7-2 (continued)
Trigger model menu structure

Menu	Description
- - **DELAY**	Set Trigger delay
- - - MAN	Specify trigger delay 0–999.9998sec.
- - - AUTO	Enable auto delay
- - **TRIG-OUT**	Configure output triggers
- - - LINE	Select the output trigger link line
- - - - TLINK	Set trigger link value: 1–6
- - - EVENTS	Select VMC (voltmeter complete) output trigger
- - - - VMC	Enable/disable VMC (on or off)
- - **TRIG-IN**	Path to control source
- - - SOURCE	Set the TRIG-IN control source
- - - - IMM	Set control source to IMMediate
- - - - TLINK	Set control source to TLINK
- - - - -TLINK	Set TLINK value: 1–6
- - - - -EVENT	Enable (set to ONCE) or disable (set to NEVER)
- **ARM**	Path to ARM layer submenus
- - **ARM-IN**	Path to ARM-IN control source
- - - IMM	Set control source to IMMediate
- - - TLINK	Set control source to TLINK
- - - - TLINK	Set TLINK value: 1–6
- - - - EVENT	Enable (set to ONCE) or disable (set to NEVER)
- - - MAN	Set control source to MANual
- - - TIMER	Set control source to TIMER. Set timer from 0.001S to 27H, 46M, and 39.992S
- - - GPIB	Set control source to GPIB
- - **ARM-OUT**	Path to ARM-OUT trigger
- - - LINE	Set the output trigger link line
- - - - TLINK	Set trigger link value: 1–6
- - - EVENT	Set Trigger Layer Done event
- - - - T - L - DONE	Enable/disable Trigger Layer Done (on / off)
- - **COUNT**	Set ARM measure count
- - - INF	Specify an INFinite measure count
- - - FIN	Specify a FINite measure count: 1–2500

NOTE *Input trigger and output triggers cannot share the same trigger link line. Defaults set line 1 as the input and line 2 as the output.*

SCPI programming

Table 7-3
SCPI commands — triggering

Command	Description	Default	Ref
ABORt	Reset trigger system (goes to idle state).		A
INITiate	Initiate one trigger cycle.		B
FETCh?	Request latest reading.		B
READ?	Trigger and request a “fresh” reading.		B
ARM[:SEQuence[1]]	Arm Layer:		
[:LAYer[1]]			
:SOURce <name>	Select control source; IMMediate, TIMer, BUS, TLINk, or MANual.	IMM	C
:COUNt <n>	Set measure count; 1 to 2500, or INF (infinite).	1	
:TIMer <n>	Set timer interval; 0.001 to 99999.999 (sec).	0.1	
[:TCONfigure]			
:DIRection <name>	Enable (SOURce) or disable (ACCeptor) bypass.	ACC	D
[:ASYNchronous]	Configure input/output triggers:		
:ILINe <NRf>	Select input trigger line; 1, 2, 3, 4, 5 or 6.	1	E
:OLINe <NRf>	Select output trigger line; 1, 2, 3, 4, 5 or 6.	2	E
:OUTPut <name>	Output trigger (TRIGger) or not at all (NONE).	NONE	
TRIGger	Trigger Layer:		
:CLEar	Clear pending input trigger immediately.		
[:SEQuence[1]]	Trigger path.		
:SOURce <name>	Select control source; IMMediate or TLINk.	IMM	
:COUNt <n>	Set measure count; 1 to 2500, or INF (infinite).	1	
:DELay <n>	Set trigger delay; 0 to 999.9998 (sec).	0.0	
:AUTO <b>	Enable or disable auto delay.	OFF	D
[:TCONfigure]			
:DIRection <name>	Enable (SOURce) or disable (ACCeptor) bypass.	ACC	E E
[:ASYNchronous]	Configure input/output triggers:		
:ILINe <NRf>	Select input trigger line; 1, 2, 3, 4, 5 or 6.	1	
:OLINe <NRf>	Select output trigger line; 1, 2, 3, 4, 5 or 6.	2	
:OUTPut <name>	Output trigger after measurement (SENSe) or not at all (NONE).	NONE	

A) ABORt

If operation has been started by the INITiate command, ABORt will cancel all operations and immediately return to the instrument to the idle state. If operation has been started by READ? (or MEASure?), ABORt has no affect.

B) INITiate

1. After sending this command to take the instrument out of idle, the instrument will perform one or more measurements and then return to idle. The FETCh? command can then be used to read the last reading that was measured.
2. If INITiate is sent while the instrument is operating within the trigger model it will not execute until the operation returns to the idle state.
3. One alternative to using INITiate is to use the READ? command. When READ? is sent, the instrument is taken out of idle and all readings that are taken are returned (See Section 13 for details on READ?).

C) ARM:SOURce <name>

With the TIMer control source selected, use the ARM:TIMer command to set the timer interval.

D) ARM:DIRection <name>

The source bypass can only be used if the TLINk control source is selected.

E) ARM:ILINe <NRf> and ARM:OLINe <NRf>

Input trigger and output trigger cannot share the same trigger link line. Defaults set line 1 as the input and line 2 as the output.

F) :TRIGger:CLEar

When this action command is sent, any pending (latched) input triggers are cleared immediately. When the picoammeter is being latched by another instrument, it may inadvertently receive and latch input triggers that do not get executed. These pending triggers could adversely affect subsequent operation.

When using external triggering, it is recommended that TRIGger:CLEar be sent after sending the ABORt commend and at the beginning of a program before sending a initiate command (See “INITiate” command.)

Programming example

The following command sequence will trigger and return 10 readings.

```
*RST                          ' Return 6485 to RST defaults.
ARM:SOURce IMMediate          ' Set arm control source Immediate.
ARM:COUNt 1                   ' Set arm count to 1.
TRIGger:SOURce IMMediate      ' Set trigger control source Immediate.
TRIGger:COUNt 10              ' Set trigger count to 10.
READ?                         ' Trigger and return 10 readings.
```

External triggering

Input and output triggers are received and sent via the rear panel TRIGGER LINK connector. The trigger link has six lines. At the factory line #2 is selected for output triggers and line #1 is selected for input triggers. These input/output assignments can be changed as previously explained in this section. The connector pinout is shown in Figure 7-4.

Figure 7-4
Trigger link connection operation

Rear Panel Pinout

Trigger Link

Pin Number	Description
1	Trigger Link 1
2	Trigger Link 2
3	Trigger Link 3
4	Trigger Link 4
5	Trigger Link 5
6	Trigger Link 6
7	Ground
8	Ground

Input trigger requirements

An input trigger is used to satisfy event detection for a trigger model layer that is using the TLINK control source. The input requires a falling-edge, TTL compatible pulse with the specifications shown in Figure 7-5.

Figure 7-5
Trigger link input pulse specifications

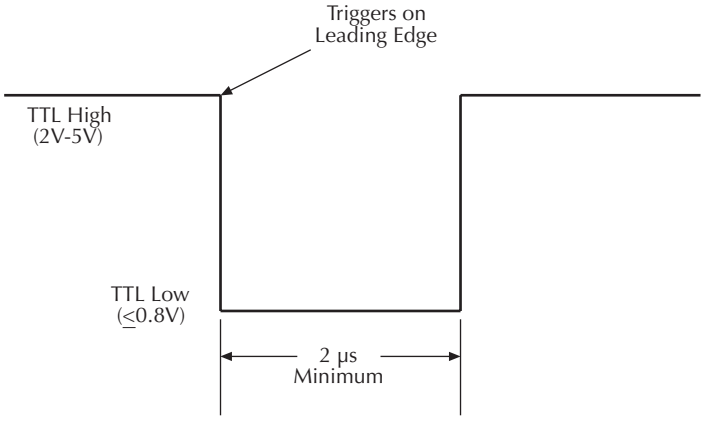

Output trigger specifications

Model 6485 can be programmed to output a trigger immediately after a measurement and/or when operation leaves the trigger layer of the trigger model. The output trigger provides a TTL-compatible output pulse that can be used to trigger other instruments. The specifications for this trigger pulse are shown in Figure 7-6. A trigger link line can source 1mA and sink up to 50mA.

Figure 7-6
Trigger link output pulse specifications

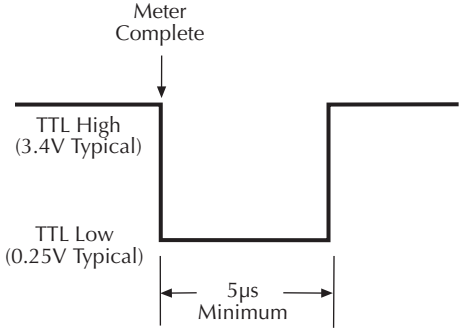

External trigger example

In a simple test system you may want to close a switching channel and measure the current from a DUT connected to that channel. Such a test system is shown in Figure 7-7, which uses a Model 6485 to measure 10 DUTs switched by a Model 7158 low current card in a Model 7001 or 7002 switch system.

Figure 7-7
DUT test system

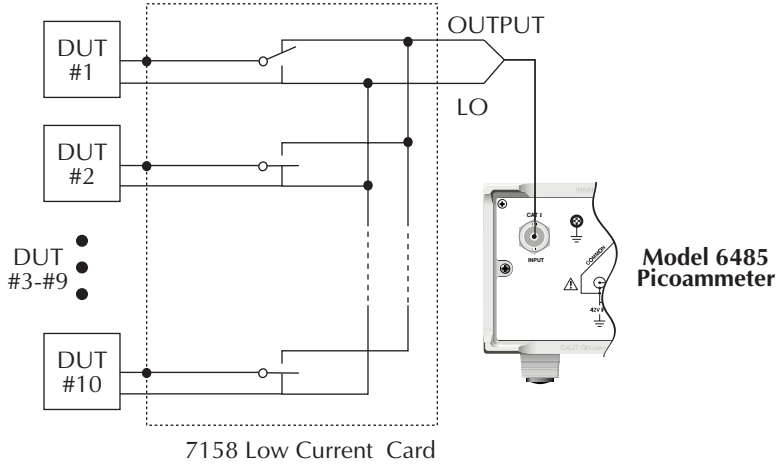

The trigger link connections for this test system are shown in Figure 7-8. The trigger link of Model 6485 is connected to the trigger link (IN or OUT) of the switching mainframe. Note that with the default trigger settings of the switching mainframe line #1 is an input and line #2 is an output.

Figure 7-8
Trigger link connections

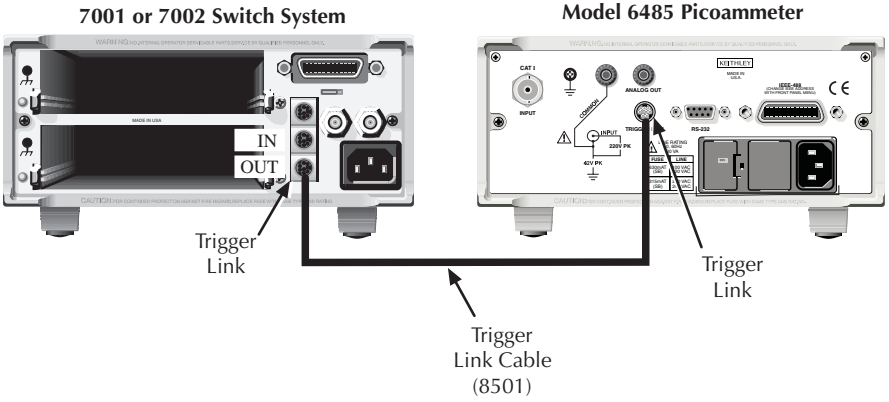

For this example, Model 6485 and switching mainframe are configured as follows:

Model 6485	**Switching Mainframe**
Factory Defaults Restored	Factory Defaults Restored
Trig-In Event = TLink	Scan List = 1!1-1!10
Trigger Input Line = #2	Number of Scans 1
Trigger Output Line = #1	Channel Spacing = TrigLink
Trigger Output Event = ON	
Trigger Count = 10	
Trigger Delay = Auto	

To store readings in Model 6485 buffer, first set the number of points to store in the buffer:

1. Press CONFIG and then STORE.
2. Set the buffer size to 10 using the ▲ and ▼ range keys and the ◀ and ▶ cursor keys.
3. Press ENTER.
4. The next time STORE is pressed, the asterisk (*) annunciator turns on to indicate the buffer is enabled (See Section 6 for details on buffer operation).

To start the test, press STEP on the switching mainframe to take it out of idle and start the scan. The switching mainframes output pulse triggers Model 6485 to take a reading and store it. Model 6485 then sends an output trigger pulse to the switching mainframe to close the next channel. This process continues until all 10 channels are scanned, measured, and stored.

Figure 7-9
Operation model for triggering example

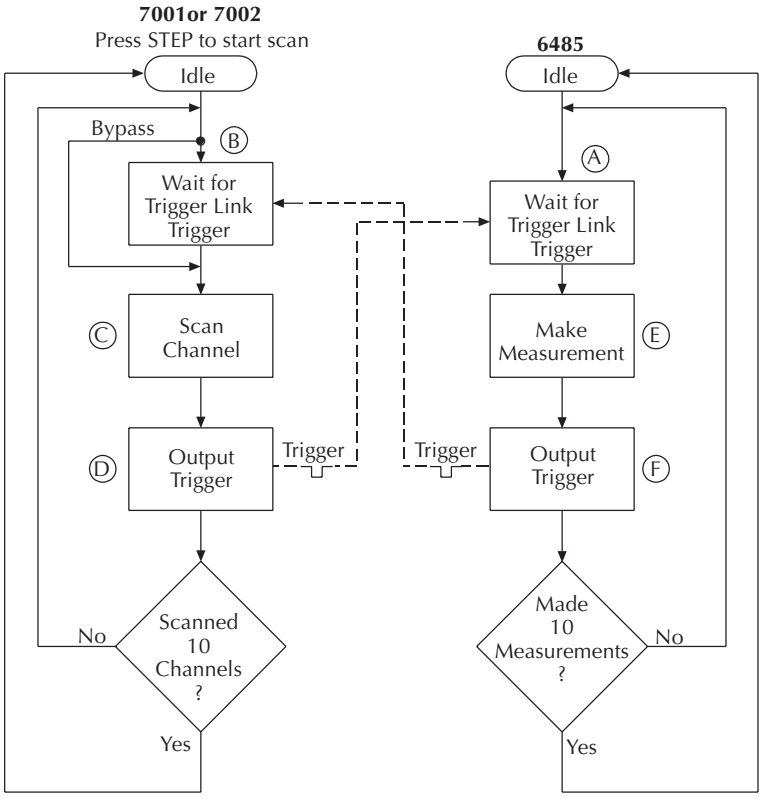

Details of this testing process are explained in the following paragraphs and are referenced to the operation model shown in Figure 7-9.

A. Operation of Model 6485 starts at point A in the flowchart where it waits for an external trigger.

B. Pressing STEP takes Model 7001/2 out of idle and places operation at point B in the flowchart.

C. For the first pass through Model, the scanner does not wait at point B. Instead, it closes the first channel (point C).

D. After the relay settles, Model 7001/2 outputs a trigger pulse. Since the instrument is programmed to scan 10 channels, operation loops back to point B, where it waits for an input trigger.

E. and F. With Model 6485 at point A, the output trigger pulse from Model 7001/2 triggers a measurement of DUT #1 (point E). After the measurement is complete, Model 6485 outputs a trigger pulse and then loops back to point A, where it waits for another input trigger.

The trigger applied to Model 7001/2 from Model 6485 closes the next channel in the scan, which then triggers Model 6485 to measure that DUT. This process continues until all 10 channels are scanned and measured.

8
Limit Tests

- **Limit testing** — Explains the basic Limit 1 and Limit 2 testing operations.
- **Front panel operation** — Explains how to configure and run tests from the front panel.
- **SCPI programming** — Covers the SCPI commands for remote operation.

Limit testing

As shown in Figure 8-1, there are two limit tests that can be performed on a DUT. Limit 1 is used as the wide pass band and Limit 2 is used as the narrow pass band. It is up to the user to specify limits that conform to this pass band relationship.

Figure 8-1
Limit tests

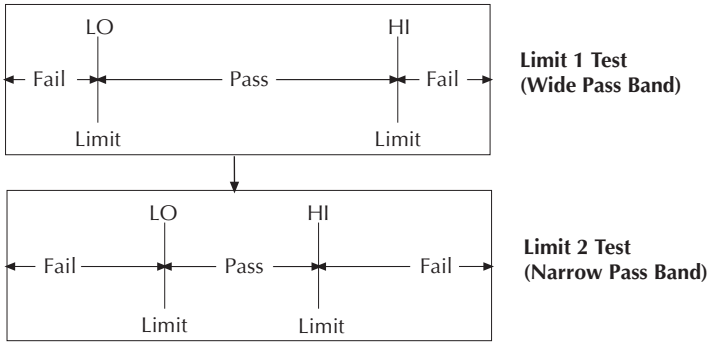

Figure 8-2 shows an example where the HI and LO limits for limit 1 are ±2mA, and the Hi and LO limits for limit 2 are ±1mA. A 0mA reading passes both limit 1 and limit 2 tests. A +1.5mA reading passes limit 1 but fails limit 2. A +2.5mA reading fails both limit 1 and limit 2.

Figure 8-2
Limit tests example

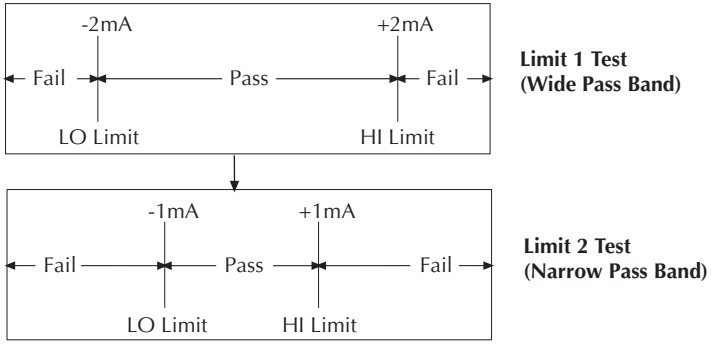

The 2-stage limit testing process is shown in Figure 8-3. If limit 1 fails, the L1 message is displayed and the test is finished. Limit 2 is not tested because the pass band relationship between the two stages implies that if limit 1 fails, limit 2 must also fail. If limit 1 passes, the limit 2 test is performed. If limit 2 fails, the L2 message is displayed. If both limit 1 and limit 2 pass, the OK message is displayed. The display messages for limit tests are summarized in Table 8-1.

A test is only performed if it is enabled. Therefore, you can perform a single-stage test or a 2-stage test. In the flowchart (Figure 8-3), operation simply proceeds through a disabled test.

Table 8-1
Test limit display messages

Display Message	Limit 1 Test Result	Limit 2 Test Result
:OK	Pass	Pass
:L1	Fail	Not Performed
:L2	Pass	Fail

Figure 8-3
Operation model for limit test

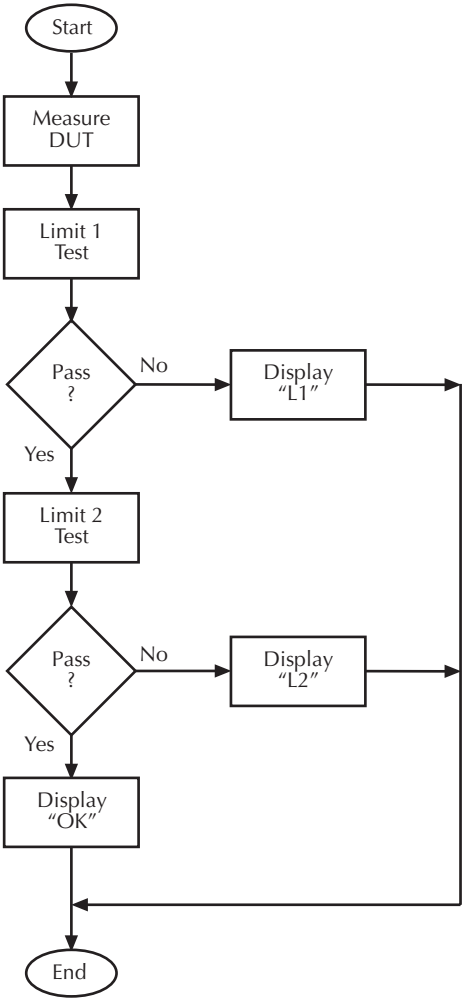

NOTE *Display messages indicate which test or tests have failed, but they do not indicate which limit (HI or LO) has failed. When using remote operation, you can determine which limit failed by reading the measurement event register. See Ref B for the FAIL? commands in Table 8-2.*

Relative (Rel), mX+b, m/X+b, and log can be used with limit testing. The tests will be done on the result of the math operation (not the input values). These math operations are covered in Section 5.

Application — A typical application for a 2-stage limit test is to sort a batch of DUT according to tolerance. For example, you may want to sort diodes (all having the same nominal value) into three groups, 1%, 5%, and >5%. The limits for limit 1 would be the 5% tolerances, and the limits for limit 2 would be the 1% tolerances. If a diode passes both tests, it belongs in the 1% group. If it passes limit 1, but fails limit 2, it belongs in the 5% group. If it fails both tests, it belongs in the >5% group.

Front panel operation

Limit test configuration

Most aspects of limit testing are configured from the limit configuration menu. Once in a menu structure, use the ▲ and ▼ keys to display menu items. Use the cursor ◀ and ▶ and the ▲ and ▼ keys to key in values. To change polarity of a value, place the cursor on "+" or "-" and press either of the ▲ or ▼ range keys. To change range for the value, place the cursor on the range symbol and scroll using the ▲ and ▼ range keys (P = pico, $_N$ = nano, μ = micro, m = milli, ^ = x1, K = kilo, M = mega, G = giga, T = tera). A menu item or value is selected by pressing ENTER.

Limits configuration menu

The configuration menu for limits is structured as follows. Bullets denote the main items of the menu. To access the menu, press CONFIG and then LIMIT.

LIMIT 1 — Configure limit 1 test:

1. **CONTROL** — Enable or disable limit 1 test.
2. **HILIM** — Set the HI limit (-9.999999T to +9.999999T).
3. **LOLIM** — Set the LO limit (-9.999999T to +9.999999T).

LIMIT 2 — Configure limit 2 test:

1. **CONTROL** — Enable or disable limit 2 test.
2. **HILIM** — Set the HI limit (-9.999999T to +9.999999T).
3. **LOLIM** — Set the LO limit (-9.999999T to +9.999999T).

Arm layer configuration menu

To access the menu, press CONFIG and then TRIG. Use the ▲ and ▼ range keys to scroll to the ARM menu.

- **ARM-IN** — Select the "start of test" option:
  IMM (Immediate) — Test starts when LIMIT key is pressed.

Perform limit tests

Step 1. Configure test system

As previously explained, testing the system could be as simple as connecting a DUT to Model 6485.

Step 2. Configure measurement

Configure Model 6485 for the desired measurement as covered in the previous sections of this manual.

Step 3. Configure limit tests

Configure Model 6485 for the limit tests as explained in "Limit test configuration," page 8-5.

Step 4. Start testing process

To enable the limit tests, press the LIMIT key—the testing process will start when LIMIT is pressed.

Step 5. Stop testing process

The testing process can be terminated at any time by again pressing the LIMIT key.

SCPI programming

Table 8-2
SCPI commands — limit tests

Command	Description	Default	Ref
:CALCulate2	CALCulate2 Subsystem:		
:FEED <name>	Select input path for limit testing; CALCulate[1] or SENSe[1].	SENS	A
:LIMit[1]	Limit 1 Testing:		
:UPPer	Configure upper limit:		
[:DATA] <n>	Set limit; -9.99999e20 to 9.99999e20.	1.0	
:LOWer	Configure lower limit:		
[:DATA] <n>	Set limit; -9.99999e20 to 9.99999e20.	-1.0	
:STATe <b>	Enable or disable Limit 1 test.	OFF	
:FAIL?	Return result of Limit 1 test; 0 (pass) or 1(fail).		B
:LIMit2	Limit 2 Testing:		
:UPPer	Configure upper limit:		
[:DATA] <n>	Set limit; -9.99999e20 to 9.99999e20.	1.0	
:LOWer	Configure lower limit:		
[:DATA] <n>	Set limit; -9.99999e20 to 9.99999e20.	-1.0	
:STATe <b>	Enable or disable Limit 2 test.	OFF	
:FAIL?	Return result of Limit 2 test; 0 (pass) or 1(fail).		B
:NULL	Configure and control Rel:		Section 5
:OFFSet <NRf>	Specify Rel value; -9.999999e20 to 9.999999e20.	0.0	
:STATe <b>	Enable or disable Rel.	OFF	
:DATA?	Return CALC2 reading(s) triggered by INITiate.		C
:LATest?	Return last (latest) CALC2 reading.		C
	Trigger Subystem:		Section 7
ARM	Arm Layer:		
:SOURce <name>	Select control source; IMMediate.	IMM	D
INITiate	Initiate one trigger cycle.		C

A) FEED <name>

Name parameters:

- CALCulate1 — Limit tests will be performed on the result of a math calculation (mX+b, m/x+b, or log).
- SENSe — Limit tests will be performed on the input signal. Note however, that Rel can be used on the result of a math calculation as well as the input signal. Limit tests will be performed on the result of the Rel operation (see CALCulate2:NULL). Details on relative, mX+b, m/X+b, and log are provided in Section 5.

B) FAIL?

In the event of a failure, you can read the measurement event register to determine which limit (upper or lower) failed. See Section 11 to program and read the measurement event register.

C) DATA?

The INITiate command must be sent to perform the programmed number of measurements. If the instrument is programmed to perform a finite number of measurements, the :DATA? command will return all the CALC2 readings after the last reading is taken. The :DATA:LATest? command will only return the last (latest) CALC2 reading.

If the instrument is programmed to perform an infinite number of measurements (arm count or trigger count set to infinite), you cannot use the :DATA? command to return CALC2 readings. However, you can use the :DATA:LATest? command to return the last CALC2 reading after aborting the measurement process. After sending the INITiate command to start the measurement process, use the ABORt command to abort the measurement process, then use :DATA:LATest? to return the last CALC2 reading.

Sending :DATA? or :DATA:LATest? without first sending INITiate will return “old” readings, or cause an error (-220) if limit is not enabled or there are no readings available.

D) ARM:SOURce <name>

Typical “start of test” options:

- IMMediate — Test starts when LIMIT key is pressed.

Programming example

The following command sequence will test DUT using the limit tests example shown in Figure 8-2.

```
*RST                        ' Restore RST defaults.
CALC2:LIM:UPP 2e-3          ' Set upper limit for Limit 1 (2mA).
CALC2:LIM:LOW -2e-3         ' Set lower limit for Limit 1 (-2mA).
CALC2:LIM:STAT ON           ' Enable Limit 1 test.
CALC2:LIM2:UPP 1e-3         ' Set upper limit for Limit 2 (1mA).
CALC2:LIM2:LOW -1e-3        ' Set lower limit for Limit 2 (-1mA).
CALC2:LIM2:STAT ON          ' Enable Limit 2 test.
                            ' Connect DUT to input.
SYST:ZCH OFF                ' Disable Z Check.
INIT                        ' Perform tests on DUT (one measure-
                              ment).
CALC2:LIM:FAIL?             ' Return result of Limit 1 test.
CALC2:LIM2:FAIL?            ' Return result of Limit 2 test.
```

9
Remote Operation

- **Selecting and configuring an interface** — Explains how to select and configure an interface; GPIB or RS-232.
- **GPIB operation and reference** — Covers the following GPIB topics:
  GPIB Bus Standards
  GPIB Bus Connections
  Primary Address Selection
  General Bus Commands
  Front Panel GPIB Operation
  Programming Syntax
- **RS-232 interface reference** — Provides basic reference information for the RS-232 interface and explains how to make connections to the computer.

Selecting and configuring an interface

Interfaces

Model 6485 supports two built-in remote interfaces:

- GPIB interface
- RS-232 interface

You can use only one interface at a time. At the factory, the GPIB bus is selected. You can select the interface only from the front panel. The interface selection is stored in non-volatile memory; it does not change when power has been off or after a remote interface reset.

GPIB interface — The GPIB is the IEEE-488 interface. Model 6485 must be assigned to a unique address. At the factory the address is set to 14, but can be set to any value from 0 to 30. However, the address must not conflict with the address assigned to other instruments in the system. You can use either the SCPI or DDC language to program the instrument.

RS-232 interface — When using the RS-232 interface, you must set baud rate, data bits, parity, terminator and flow control. For the RS-232 interface, you can only use the SCPI language to program the instrument.

Languages

For the GPIB interface, there are three programming languages to choose from:

- SCPI language (488.2)
- DDC language
- 488.1 language

NOTE *For the RS-232 interface, only the SCPI language can be used to program the instrument. When the RS-232 interface is selected, it automatically defaults to SCPI.*

SCPI language — Standard Commands for Programmable Instrument (SCPI) is fully supported by the GPIB and RS-232 interfaces. Always calibrate Model 6485 using the SCPI language.

DDC language — Model 6485 implements most DDCs (device-dependent commands) available in the Keithley Model 485 picoammeter. The available commands are provided in Appendix D. See the Model 485 instruction manual for details on operation.

488.1 language — See Appendix G for details.

Interface selection and configuration procedures

NOTE The unit will reset if the language is changed (SCPI, 488.1, and DDC).

When you select (enable) the GPIB interface, the RS-232 interface disables. Conversely, selecting (enabling) the RS-232 interface disables the GPIB interface.

Select the interface from the COMM menu structure (access by pressing the COMM key while in local). Use the ▲ and ▼ range keys to change the selected interface (RS-232 or GPIB). Press enter to save the change (note that the instrument will exit the menu structure and perform the power-on sequence when changing the interface).

NOTE When an interface is enabled (on) or disabled (off), the instrument will exit from the menu structure and perform the power-on sequence.

Configuring the GPIB interface

Select the GPIB interface from the COMM menu structure (access by pressing the COMM key while in local). After selecting the GPIB interface, press the CONFIG key and then the COMM key to configure the GPIB address and language. From this menu you can check or change the following settings:

- Primary address: 0–30
- Language: SCPI (SCPI 1996.0 which includes 488.2), 488.1, or DDC

Press the ▲ or ▼ range keys to scroll through ADDress and LANGuage available. To make changes to a setting, press the ▶ key. Then use the ▲ or ▼ range keys and the ◀ and ▶ cursor keys to select and modify the value as desired. Press ENTER to save the changes and stay in the menu (pressing EXIT also saves the changes but leaves the menu).

RS-232 interface

NOTE Only the SCPI language can be used with the RS-232 interface. The instrument defaults to the SCPI language when the RS-232 interface is selected (enabled).

Select the RS-232 interface from the COMM menu structure (access by pressing the COMM key while in local). After selecting the RS-232 interface, press the CONFIG key and then the COMM key to configure the RS-232 interface, and check or change the following settings:

- BAUD: Baud rate (57.6K, 38.4k, 19.2k, 9600, 4800, 2400, 1200, 600 or 300)
- BITS: Data bits (7 or 8)
- PARITY: Parity (none, odd, or even)
- TX TERMINATOR: Terminator (CR, LF, CRLF or LFCR)
- FLOW: Flow control (none or Xon/Xoff)

NOTE *See "RS-232 interface reference," page 9-16 for information on RS-232 settings and connections to the computer.*

Press the ▲ or ▼ range keys to scroll through the available RS-232 settings. To make changes to a setting, press the ▶ key. Then use the ▲ or ▼ range keys to select and modify the value as desired. Press ENTER to save the changes and move to the next menu item (pressing EXIT also saves the changes but leaves the menu). At the last menu item (FLOW), ENTER will save and exit the menu.

GPIB operation and reference

GPIB bus standards

The GPIB bus is the IEEE-488 instrumentation data bus with hardware and programming standards originally adopted by the IEEE (Institute of Electrical and Electronic Engineers) in 1975. Model 6485 conforms to these standards:

- IEEE-488.1-1987
- IEEE-488.2-1992

This standard defines a syntax for sending data to and from instruments, how an instrument interprets this data, what registers should exist to record the state of the instrument, and a group of common commands.

- SCPI 1996.0 (Standard Commands for Programmable Instruments)

This standard defines a command language protocol. It goes one step further than IEEE-488.2-1992 and defines a standard set of commands to control every programmable aspect of an instrument.

GPIB bus connections

To connect Model 6485 to the GPIB bus, use a cable equipped with standard IEEE-488 connectors as shown in Figure 9-1.

Figure 9-1
IEEE-488 connector

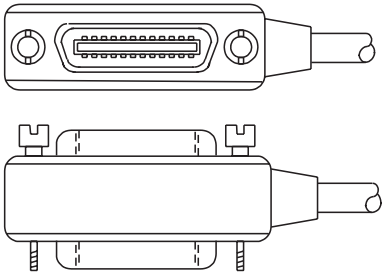

To allow many parallel connections to one instrument, stack the connector. Two screws are located on each connector to ensure that connections remain secure. Current standards call for metric threads, which are identified with dark-colored screws. Earlier versions had different screws, which were silver-colored. Do not use these types of connectors on Model 6485 because it is designed for metric threads.

Figure 9-2 shows a typical connecting scheme for a multiunit test system.

Figure 9-2
Multi-unit connections

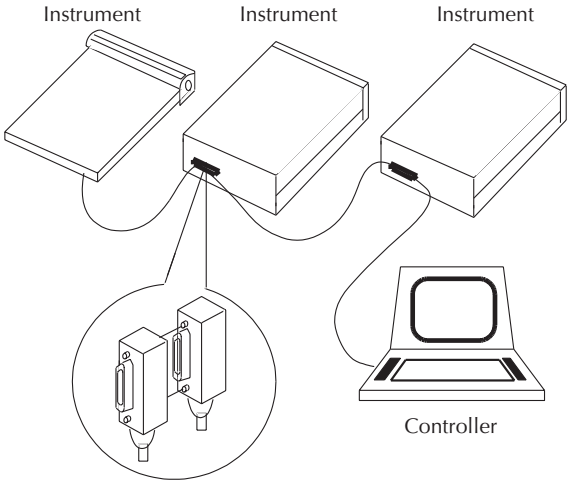

To avoid possible mechanical damage, stack no more than three connectors on any one unit.

NOTE *To minimize interference caused by electromagnetic radiation, use only shielded IEEE-488 cables. Available shielded cables from Keithley are Models 7007-1 and 7007-2.*

To connect Model 6485 to the IEEE-488 bus, follow these steps:

1. Line up the cable connector with the connector located on the rear panel. The connector is designed so that it will fit only one way. Figure 9-3 shows the location of the IEEE-488 connector.

Figure 9-3
IEEE-488 connector location

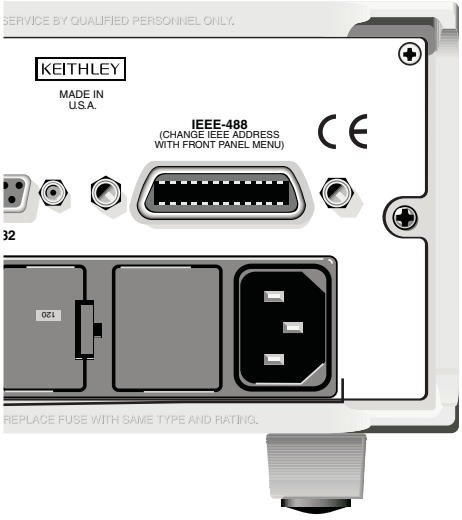

2. Tighten the screws securely, making sure not to over tighten them.
3. Connect any additional connectors from other instruments as required for your application.
4. Make sure that the other end of the cable is properly connected to the controller. Most controllers are equipped with an IEEE-488 style connector, but a few may require a different type of connecting cable. See your controllers instruction manual for information about properly connecting to the IEEE-488 bus.

NOTE *You can only have 15 devices connected to an IEEE-488 bus, including the controller. The maximum cable length is either 20 meters or two meters times the number of devices, whichever is less. Not observing these limits may cause erratic bus operation.*

Primary address

Model 6485 ships from the factory with a GPIB address of 14. When the instrument powers up, it momentarily displays the primary address. You can set the address to a value of 0-30. Do not assign the same address to another device or to a controller that is on the same GPIB bus.

Usually controller addresses are 0 or 21, but see the controllers instruction manual for details. Make sure the address of the controller is the same as that specified in the controllers programming language. To make sure the units interface is properly selected and configured, or to check or change the GPIB address, refer to "Selecting and configuring an interface," page 9-2.

General IEEE-488 bus commands

Commands and associated statements

General commands are those commands, such as DCL, that have the same general meaning regardless of the instrument. Table 9-1 lists the general bus commands.

Table 9-1
General bus commands

Command	Effect on Model 6485
REN	Goes into remote when next addressed to listen.
IFC	Reset interface; all devices go into talker and listener idle states.
LLO	LOCAL key locked out.
GTL	Cancel remote; restore front panel operation for Model 6485.
DCL	Returns all devices to known conditions.
SDC	Returns Model 6485 to known conditions.
GET	Initiates a trigger.
SPE, SPD	Serial polls Model 6485.

REN (remote enable)

The remote enable command is sent to Model 6485 by the controller to set up the instrument for remote operation. Generally, the instrument should be placed in the remote mode before you attempt to program it over the bus. Simply setting REN true does not actually place the instrument in the remote state. You must address the instrument to listen after setting REN true before it goes into remote.

Note that the instrument does not have to be in remote to be a talker.

Note that all front panel controls, except for LOCAL and POWER, are inoperative while the instrument is in remote. You can restore normal front panel operation by pressing the LOCAL key.

IFC (interface clear)

The IFC command is sent by the controller to place all instruments on the bus in the local, talker, listener idle states. Model 6485 responds to the IFC command by canceling front panel TALK or LSTN lights, if the instrument was previously placed in one of those states. Note that this command does not affect the status of the instrument; settings, data, and event registers are not changed.

To send the IFC command, the controller must set the IFC line true for a minimum of 100µs.

LLO (local lockout)

Use the LLO command to prevent local operation of the instrument. After the unit receives LLO, all its front panel controls except the POWER are inoperative. In this state, pressing LOCAL will not restore control to the front panel. The GTL command restores control to the front panel.

GTL (go to local)

Use the GTL command to put a remote mode instrument into local mode. The GTL command also restores front panel key operation.

DCL (device clear)

Use the DCL command to clear the GPIB interface and return it to a known state. Note that the DCL command is not an addressed command, so all instruments equipped to implement DCL will do so simultaneously.

When Model 6485 receives a DCL command, it clears the input buffer and output queue, cancels deferred commands, and clears any command that prevents the processing of any other device command. A DCL does not affect instrument settings and stored data.

SDC (selective device clear)

The SDC command is an addressed command that performs essentially the same function as the DCL command. However, since each device must be individually addressed, the SDC command provides a method to clear only selected instruments instead of clearing all instruments simultaneously, as is the case with DCL.

GET (group execute trigger)

GET is a GPIB trigger that is used as an event to control operation. Model 6485 reacts to this trigger if it is the programmed control source. The control source is programmed from the SCPI TRIGger subsystem.

SPE, SPD (serial polling)

Use the serial polling sequence to obtain Model 6485 serial poll byte. The serial poll byte contains important information about internal functions. Generally, the serial polling sequence is used by the controller to determine which of several instruments has requested service with the SRQ line. However, the serial polling sequence may be performed at any time to obtain the status byte from Model 6485.

Front panel GPIB operation

The following paragraphs describe aspects of the front panel that are part of GPIB operation, including messages, status indicators, and the LOCAL key.

Error and status messages

See Appendix B for a list of error and status messages associated with IEEE-488 programming. The instrument can be programmed to generate an SRQ, and command queries can be performed to check for specific error conditions.

GPIB status indicators

The REM (remote), TALK (talk), LSTN (listen), and SRQ (service request) annunciators show the GPIB bus status. Each of these indicators is described below.

- REM — This indicator shows when the instrument is in the remote state. REM does not necessarily indicate the state of the REM line, as the instrument must be addressed to listen with REM true before the REM indicator turns on. When the instrument is in remote, all front panel keys, except for the LOCAL key, are locked out. When REM is turned off, the instrument is in the local state, and front panel operation is restored.
- TALK — This indicator is on when the instrument is in the talker active state. Place the unit in the talk state by addressing it to talk with the correct MTA (My Talk Address) command. TALK is off when the unit is in the talker idle state. Place the unit in the talker idle state by sending a UNT (Untalk) command, addressing it to listen, or sending the IFC (Interface Clear) command.
- LSTN — This indicator is on when Model 6485 is in the listener active state, which is activated by addressing the instrument to listen with the correct MLA (My Listen Address) command. LSTN is off when the unit is in the listener idle state. Place the unit in the listener idle state by sending UNL (Unlisten), addressing it to talk, or sending the IFC (Interface Clear) command over the bus.

- SRQ — You can program the instrument to generate a service request (SRQ) when one or more errors or conditions occur. When this indicator is on, a service request has been generated. This indicator stays on until the serial poll byte is read or all the conditions that caused SRQ have ceased to exist.

LOCAL key

The LOCAL key cancels the remote state and restores local operation of the instrument. Pressing the LOCAL key also turns off the REM indicator and returns the display to normal if a user-defined message was displayed. If the unit is in local (not in remote), the local key acts as a configure key (see "Front panel summary," page 1-6.)

If the LLO (Local Lockout) command is in effect, the LOCAL key is also inoperative.

Programming syntax

The following paragraphs cover syntax for both common commands and SCPI commands. For more information, see the IEEE-488.2 and SCPI standards.

Command words

Program messages are made up of one or more command words.

Commands and command parameters

Common commands and SCPI commands may or may not use a parameter. The following are some examples:

*SAV <NRf>	Parameter (NRf) required.
*RST	No parameter used.
:DISPlay:ENABle <b>	Parameter <b> required.
:SYSTem:PRESet	No parameter used.

Put at least one space between the command word and the parameter.

- Brackets [ ] — Some command words are enclosed in brackets ([ ]). These brackets are used to denote an optional command word that does not need to be included in the program message. For example:

  :INITiate[:IMMediate]

  These brackets indicate that :IMMediate is implied (optional) and does not have to be used. Thus, the above command can be sent in one of two ways:

  :INITiate or :INITiate:IMMediate

  Notice that the optional command is used without the brackets. When using optional command words in your program, do not include the brackets.

- Parameter types — The following are some of the common parameter types:

  <b> Boolean — Used to enable or disable an instrument operation. 0 or OFF disables the operation, and 1 or ON enables the operation.

  :DISPlay:ENABle ON — Enable the display

  <name> Name parameter — Select a parameter name from a listed group.

  <name> = NEVer
  = NEXT

  :CALCulate:FORMat MXB — Select Mx + B calculation

  <NRf> Numeric representation format — A number that can be expressed as an integer (e.g., 8) a real number (e.g., 23.6) or an exponent (2.3E6).

  :TRACe:POINts 20 — Set buffer size to 20

  <NDN> Non-decimal numeric — A non-decimal value that can be used to program status enable registers. A unique header identifies the format; #B (binary), #H (hexadecimal) and #Q (octal).

  *SRE #B10001 — Set bits B0 and B4 of Service Request Enable Register

  <n> Numeric value — Can consist of an NRf number or one of the following name parameters: DEFault, MINimum, or MAXimum. When the DEFault parameter is used, the instrument is programmed to the *RST default value. When the MINimum parameter is used, the instrument is programmed to the lowest allowable value. When the MAXimum parameter is used, the instrument is programmed to the largest allowable value.

  :ARM:TIMer 0.1 — Sets timer to 100 msec.
  :ARM:TIMer DEFault — Sets timer to 0.1 sec.
  :ARM:TIMer MINimum — Sets timer to 1 msec.
  :ARM:TIMer MAXimum — Sets timer to 999999.999 sec.

- Angle brackets < > — Used to denote a parameter type. Do not include the brackets in the program message.

  :DISPlay:ENABle <b>

  The <b> indicates that a Boolean type parameter is required. Thus, to enable the display, you must send the command with the ON or 1 parameter as follows.

  :DISPlay:ENABle ON or 1

Query commands

The query command requests the presently programmed status. It is identified by the question mark (?) at the end of the fundamental form of the command. Most commands have a query form.

:ARM:TIMer?	Queries the timer interval

Most commands that require a numeric parameter (<n>) can also use the DEFault, MINimum, and MAXimum parameters for the query form. These query forms are used to determine the *RST default value and the upper and lower limits for the fundamental command.

:ARM:TIMer? DEFault	Queries the *RST default value
:ARM:TIMer? MINimum	Queries the lowest allowable value
:ARM:TIMer? MAXimum	Queries the largest allowable value

Case sensitivity

Common commands and SCPI commands are not case sensitive. You can use upper or lower case and any case combination. Examples:

*RST	= *rst
:DATA?	= :data?
:SYSTem:PRESet	= :system:preset

Long-form and short-form versions

A SCPI command word can be sent in its long-form or short-form version. The command tables in this manual use the long-form version. However, the short-form version is indicated by upper case characters.

:SYSTem:PRESet	long-form
:SYST:PRES	short form
:SYSTem:PRES	long-form and short-form combination

Note that each command word must be in either long-form or short-form. For example, :SYSTe:PRESe is illegal and will generate an error. The command will not be executed.

Short-form rules

Use the following rules to determine the short-form version of any SCPI command:

- If the length of the command word is four letters or less, no short form version exists.

  :auto = :auto

These rules apply to command words that exceed four letters:

- If the fourth letter of the command word is a vowel, delete it and all letters after it.

  immediate = :imm

- If the fourth letter of the command word is a consonant, retain it but drop all the letters after it.

  :format = :form

- If the command contains a question mark (?) or a non-optional number included in the command word, you must include it in the short-form version.

  :delay? = :del?

- Command words or characters that are enclosed in brackets ([ ]) are optional and need not be included in the program message.

Program messages

A program message is made up of one or more command words sent by the computer to the instrument. Each common command is simply a three letter acronym preceded by an asterisk (*). The following SCPI commands from the STATus subsystem are used to help explain how command words are structured to formulate program messages.

Command structure	
:STATus	Path (Root)
:OPERation	Path
:ENABle <NRf>	Command and parameter
:ENABle?	Query command
:PRESet	Command

Single command messages

The above command structure has three levels. The first level is made up of the root command (:STATus) and serves as a path. The second level is made up of another path (:OPERation) and a command (:PRESet). The third path is made up of one command for the :OPERation path. The three commands in this structure can be executed by sending three separate program messages as follows:

:stat:oper:enab <NRf>
:stat:oper:enab?
:stat:pres

In each of the above program messages, the path pointer starts at the root command (:stat) and moves down the command levels until the command is executed.

Multiple command messages

You can send multiple command messages in the same program message as long as they are separated by semicolons (;). The following is an example showing two commands in one program message:

:stat:oper; :stat:oper:enab <NRf>

When the above is sent, the first command word is recognized as the root command (:stat). When the next colon is detected, the path pointer moves down to the next command level and executes the command. When the path pointer sees the colon after the semicolon (;), it resets back to the root level and starts over.

Commands that are on the same command level can be executed without having to retype the entire command path. Example:

:stat:oper:enab <NRf>; enab?

After the first command (:enab) is executed, the path pointer is at the third command level in the structure. Since :enab? is also on the third level, it can be entered without repeating the entire path name. Notice that the leading colon for :enab? is not included in the program message. If a colon were included, the path pointer would reset to the root level and expect a root command. Since :enab? is not a root command, an error would occur.

Command path rules

- Each new program message must begin with the root command, unless it is optional (e.g., [:SENSe]). If the root is optional, simply treat a command word on the next level as the root.
- The colon (:) at the beginning of a program message is optional and need not be used.

  :stat:pres = stat:pres

- When the path pointer detects a colon (:), it moves down to the next command level. An exception is when the path pointer detects a semicolon (;), which is used to separate commands within the program message.
- When the path pointer detects a colon (:) that immediately follows a semicolon (;), it resets to the root level.
- The path pointer can only move down. It cannot be moved up a level. Executing a command at a higher level requires that you start over at the root command.

Using common commands and SCPI commands in the same message

Both common commands and SCPI commands can be used in the same message as long as they are separated by semicolons (;). A common command can be executed at any command level and will not affect the path pointer.

:stat:oper:enab <NRf>; *ESE <NRf>

Program Message Terminator (PMT)

Each program message must be terminated with an LF (line feed), EOI (end or identify), or an LF+EOI. The bus will hang if your computer does not provide this termination. The following example shows how a program message must be terminated:

:trac:poin 10 <PMT>

Command execution rules

- Commands execute in the order that they are presented in the program message.
- An invalid command generates an error and, of course, is not executed.
- Valid commands that precede an invalid command in a multiple command program message are executed.
- Valid commands that follow an invalid command in a multiple command program message are ignored.
- For fastest command execution:
  1. Do not use optional command words (i.e., [:SENSE [1]]).
  2. Do not use the colon (:) at the beginning of a program message.
  3. Always use the short-form versions of commands and parameters.
  4. Minimize the amount of “white” space in command strings.
  5. Keep numeric parameters simple (i.e., 1 vs. 1.000e + 00).
  6. Use all upper-case.

Response messages

A response message is the message sent by the instrument to the computer in response to a query command program message.

Sending a response message

After sending a query command, the response message is placed in the output queue. When Model 6485 is addressed to talk, the response message is sent from the output queue to the computer.

Multiple response messages

If you send more than one query command in the same program message (see “Multiple Command Messages”), the multiple response messages for all the queries is sent to the computer when Model 6485 is addressed to talk. The responses are sent in the order that the query commands were sent and are separated by semicolons (;). Items within the same query are separated by commas (,). The following example shows the response message for a program message that contains four single item query commands:

0; 1; 1; 0

Response Message Terminator (RMT)

Each response is terminated with an LF (line feed) and EOI (end or identify). The following example shows how a multiple response message is terminated:

0; 1; 1; 0; <RMT>

Message exchange protocol

Two rules summarize the message exchange protocol:

Rule 1. Always tell Model 6485 what to send to the computer.
The following two steps must always be performed to send information from the instrument other computer:
1. Send the appropriate query command(s) in a program message.
2. Address Model 6485 to talk.

Rule 2. The complete response message must be received by the computer before another program message can be sent to Model 6485.

RS-232 interface reference

Sending and receiving data

The RS-232 interface transfers data using seven or eight data bits and one stop bit. Parity selections include none, odd or even.

When using the RS-232 interface, the unit will not respond to DDC or general GPIB commands (undefined header error) see Table 9-1. See Table 13-3 for SCPI equivalents to selected general commands.

RS-232 settings

The procedure to select and configure the RS-232 interface is provided in "Selecting and configuring an interface," page 9-2. Make sure the controller you connect to Model 6485 also uses these settings.

NOTE *You can break data transmissions by sending a ^C or ^X character string to Model 6485. This clears any pending operation and discards any pending output.*

Baud rate

The baud rate is the rate at which Model 6485 and the programming terminal communicate. You can choose from one of the following rates: 57.6k, 38.4k, 19.2k, 9600, 4800, 2400, 1200, 600 or 300.

Make sure that the programming terminal that you are connecting to Model 6485 can support the baud rate you selected. Both Model 6485 and the other device must be configured for the same baud rate.

Data and stop bits

The RS-232 can be set to transfer data using seven or eight data bits and one stop bit.

Parity

Parity for the RS-232 interface can be set to none, even, or odd.

Terminator

Model 6485 can be configured to terminate each program message that it transmits to the controller with any of the following combinations of <CR> and <LF>:

- LF line feed
- CR carriage return
- LFCR line feed, carriage return
- CRLF carriage return, line feed

Flow control (signal handshaking)

Signal handshaking between the controller and the instrument allows the two devices to communicate to each other regarding being ready or not ready to receive data. Model 6485 does not support hardware handshaking (flow control).

Software flow control is in the form of X_ON and X_OFF characters and is enabled when XonXoFF is selected from the RS232 FLOW menu. When the input queue of Model 6485 becomes more than 3/4 full, the instrument issues an X_OFF command. The control program should respond to this and stop sending characters until Model 6485 issues the X_ON, which it will do once its input buffer has dropped below half-full. Model 6485 recognizes X_ON and X_OFF sent from the controller. An X_OFF will cause Model 6485 to stop outputting characters until it sees an X_ON. Incoming commands are processed after the <CR> character is received from the controller.

If NONE is the selected flow control, then there will be no signal handshaking between the controller and Model 6485. Data will be lost if transmitted before the receiving device is ready.

RS-232 connections

The RS-232 serial port can be connected to the serial port of a controller (i.e., personal computer) using a straight through RS-232 cable terminated with DB-9 connectors. **Do not use a null modem cable**. The serial port uses the transmit (TXD), receive (RXD), and signal ground (GND) lines of the RS-232 standard. It does not use the hardware handshaking lines CTS and RTS. Figure 9-4 shows the rear panel connector for the RS-232 interface, and Table 9-2 shows the pinout for the connector.

Figure 9-4
RS-232 interface connector

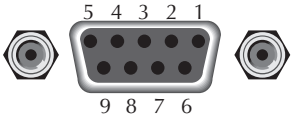

RS232
Rear Panel Connector

If your computer uses a DB-25 connector for the RS-232 interface, you will need a cable or adapter with a DB-25 connector on one end and a DB-9 connector on the other, wired straight through (not null modem). Table 9-3 provides pinout identification for the 9-pin (DB-9) or 25-pin (DB-25) serial port connector on the computer (PC).

Table 9-2
RS-232 connector pinout

Pin number	Description
1	DCD, data carrier detect
2	TXD, transmit data
3	RXD, receive data
4	DTR, data terminal ready
5	GND, signal ground
6	DSR, data set ready
7	RTS, ready to send
8	CTS, clear to send
9	No connections

RTS and CTS are tied together.
DCD, DTR, and DSR are tied together.

Table 9-3
PC serial port pinout

Signal	DB-9 pin number	DB-25 pin number
DCD, data carrier detect	1	8
RXD, receive data	2	3
TXD, transmit data	3	2
DTR, data terminal ready	4	20
GND, signal ground	5	7
DSR, data set ready	6	6
RTS, request to send	7	4
CTS, clear to send	8	5
RI, ring indicator	9	22

Error messages

See Appendix B for RS-232 error messages.

10
Status Structure

- **Overview** — Provides an operational overview of the status structure for Model 6485.
- **Clearing registers and queues** — Covers the actions that clear (reset) registers and queues.
- **Programming and reading registers** — Explains how to program enable registers and read any register in the status structure.
- **Status byte and service request (SRQ)** — Explains how to program the status byte to generate service requests (SRQs). Shows how to use the serial poll sequence to detect SRQs.
- **Status register sets** — Provides bit identification and command information for the four status register sets; standard event status, operation event status, measurement event status, and questionable event status.
- **Queues** — Provides details and command information on the output queue and error queue.

Overview

Model 6485 provides a series of status registers and queues allowing the operator to monitor and manipulate the various instrument events. The status structure is shown in Figure 10-1. The heart of the status structure is the status byte register. This register can be read by the users test program to determine if a service request (SRQ) has occurred and what event caused it.

Status byte and SRQ — The status byte register receives the summary bits of four status register sets and two queues. The register sets and queues monitor the various instrument events. When an enabled event occurs, it sets a summary bit in the status byte register. When a summary bit of the status byte is set and its corresponding enable bit is set (as programmed by the user), the RQS/MSS bit will set to indicate that an SRQ has occurred.

Status register sets — A typical status register set is made up of a condition register, an event register, and an event enable register. A condition register is a read-only register that constantly updates to reflect the present operating conditions of the instrument.

When an event occurs, the appropriate event register bit sets to 1. The bit remains latched to 1 until the register is reset. When an event register bit is set and its corresponding enable bit is set (as programmed by the user), the output (summary) of the register will set to 1, which in turn sets the summary bit of the status byte register.

Queues — Model 6485 uses an output queue and an error queue. The response messages to query commands are placed in the output queue. As various programming errors and status messages occur, they are placed in the error queue. When a queue contains data, it sets the appropriate summary bit of the status byte register.

Figure 10-1
6485 status mode structure

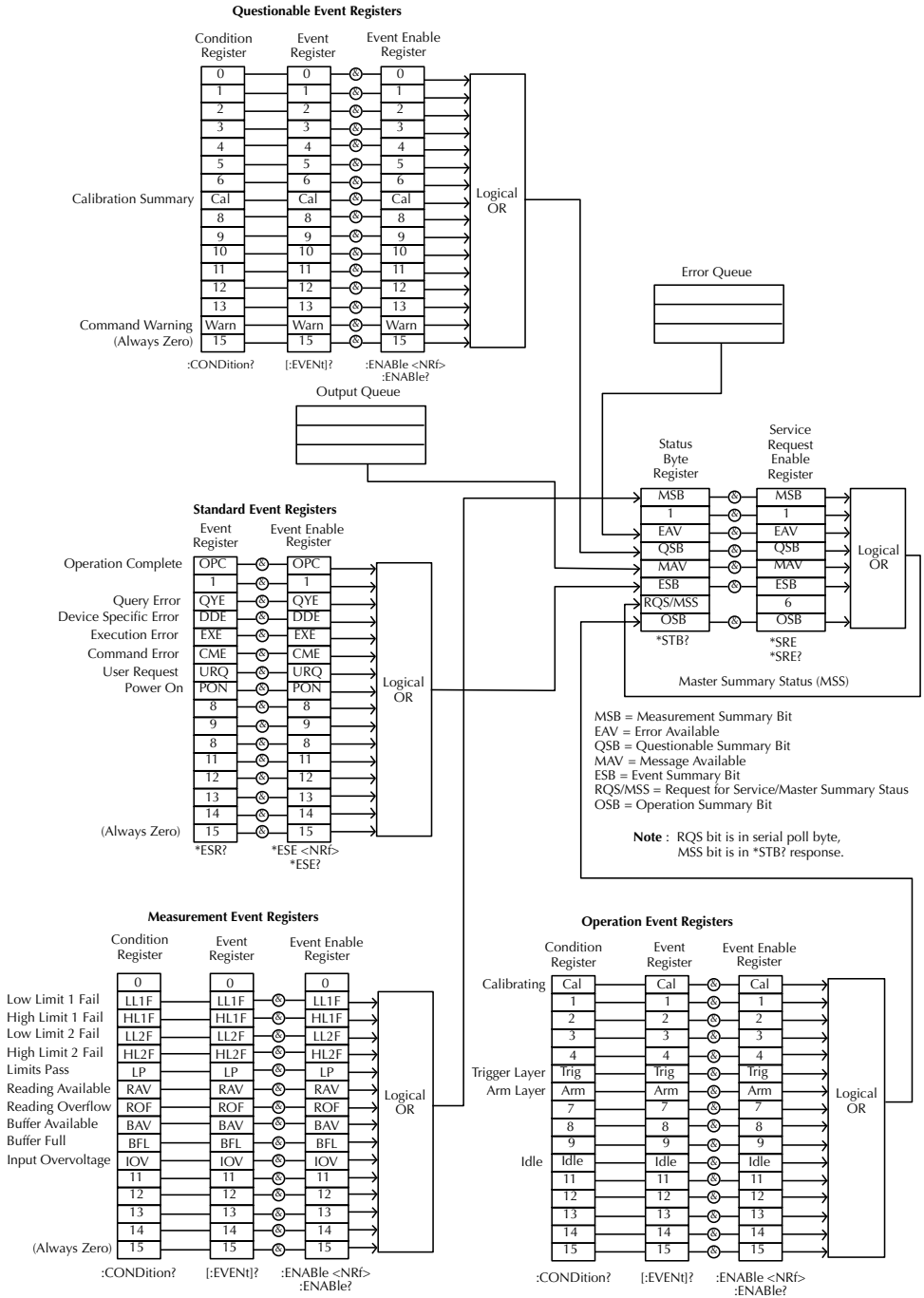

Clearing registers and queues

When Model 6485 is turned on, the bits of all registers in the status structure are clear (reset to 0) and the two queues are empty. Commands to reset the event and event enable registers, and the error queue are listed in Table 10-1. In addition to these commands, any enable register can be reset by sending the 0 parameter value with the individual command to program the register.

NOTE *SYSTem:PRESet and *RST have no effect on status structure registers and queues.*

Table 10-1
Common and SCPI commands — reset registers and clear queues

Commands	Description	Ref
To reset registers:		
*CLS	Reset all bits of the following event registers to 0: Standard event register Operation event register Measurement event register Questionable event register	Note 1
STATus :PRESet	STATus subsystem: Reset all bits of the following enable registers to 0: Operation event enable register Measurement event enable register Questionable event enable register	Note 1
To clear error queue:		
*CLS	Clear all messages from error queue	Note 2
STATus :QUEue :CLEar	STATus subsystem: Error queue: Clear messages from error queue	Note 3
SYSTem :ERRor :CLEar	SYSTem subsystem: Error queue: Clear messages from error queue	Note 3

Notes:
1. The standard event enable register is not reset by STATus:PRESet or *CLS. Send the 0 parameter value with *ESE to reset all bits of that enable register to 0 (see "Status byte and service request (SRQ)," page 10-7).
2. STATus:PRESet has no effect on the error queue.
3. Use either of the two clear commands to clear the error queue.

Programming and reading registers

Programming enable registers

The only registers that can be programmed by the user are the enable registers. All other registers in the status structure are read-only registers. The following explains how to ascertain the parameter values for the various commands used to program enable registers. The actual commands are covered later in this section (Table 10-3 and Table 10-6).

A command to program an event enable register is sent with a parameter value that determines the desired state (0 or 1) of each bit in the appropriate register. An enable register can be programmed using any of the following data formats for the parameter value; binary, decimal, hexadecimal, or octal.

The bit positions of the register (Figure 10-1) indicate the binary parameter value. For example, if you wish to sets bits B4, B3, and B1, the binary value would be 11010 (where B4=1, B3=1, B1=1 and all other bits are 0). When you use one of the other formats, convert the binary number to its decimal, hexadecimal, or octal equivalent:

Binary 11010 = Decimal 26 = Hexadecimal 1A = Octal 32

Note that Figure 10-2 includes the decimal weight for each register bit. To set bits B4, B3, and B1, the decimal parameter value would be the sum of the decimal weights for those bits (16+8+2 = 26).

The <NDN> (non-decimal numeric) parameter type is used to send non-decimal values. These values require a header (#B, #H or #Q) to identify the data format being sent. The letter in the header can be upper or lower case. The <NRf> (numeric representation format) parameter type is used to send decimal values, and does not use a header. The following examples show the proper parameter syntax for setting bits B5, B3, and B2:

#b101100	Binary format (<NDN> parameter type)
#h2C	Hexadecimal format (<NDN> parameter type)
#q54	Octal format (<NDN> parameter type)
44	Decimal format (<NRf> parameter type)

Valid characters for the non-decimal parameter values are shown as follows:

<NDN> Format	Valid Characters
Binary	1's and 0's
Hexadecimal	0 through 9 and A through F
Octal	0 through 7

Figure 10-2
16-bit status register

Bit Position	B7	B6	B5	B4	B3	B2	B1	B0
Binary Value	0/1	0/1	0/1	0/1	0/1	0/1	0/1	0/1
Decimal Weights	128 (2^7)	64 (2^6)	32 (2^5)	16 (2^4)	8 (2^3)	4 (2^2)	2 (2^1)	1 (2^0)

A. Bits 0 through 7

Bit Position	B15	B14	B13	B12	B11	B10	B9	B8
Binary Value	0/1	0/1	0/1	0/1	0/1	0/1	0/1	0/1
Decimal Weights	32768 (2^{15})	16384 (2^{14})	8192 (2^{13})	4096 (2^{12})	2048 (2^{11})	1024 (2^{10})	512 (2^9)	256 (2^8)

B. Bits 8 through 15

Reading registers

Any register in the status structure can be read by using the appropriate query (?) command. The following explains how to interpret the returned value (response message). The actual query commands are covered later in this section (Table 10-3 through Table 10-6).

The response message will be a value that indicates which bits in the register are set. That value (if not already binary) will have to be converted to its binary equivalent. For example, for a binary value of 100101, bits B5, B2, and B0 are set.

The returned value can be in the binary, decimal, hexadecimal, or octal format. The FORMat:SREGister command is used to select the data format for the returned value (Table 10-2).

For non-decimal formats, one of the following headers will accompany the returned value to indicate which format is selected:

#B = Header for binary values,
#H = Header for hexadecimal values,
#Q = Header for octal values

Table 10-2
SCPI command — data formats for reading status registers

Command	Description	Default
:FORMat :SREGister <name>	FORMat subsystem Select data format for reading status registers: <name>=ASCii Decimal format HEXadecimal Hexadecimal format OCTal Octal format BINary Binary format	ASCii

Status byte and service request (SRQ)

Service request is controlled by two 8-bit registers; the status byte register and the service request enable register. Figure 10-3 shows the structure of these registers.

Figure 10-3
Status byte and service request

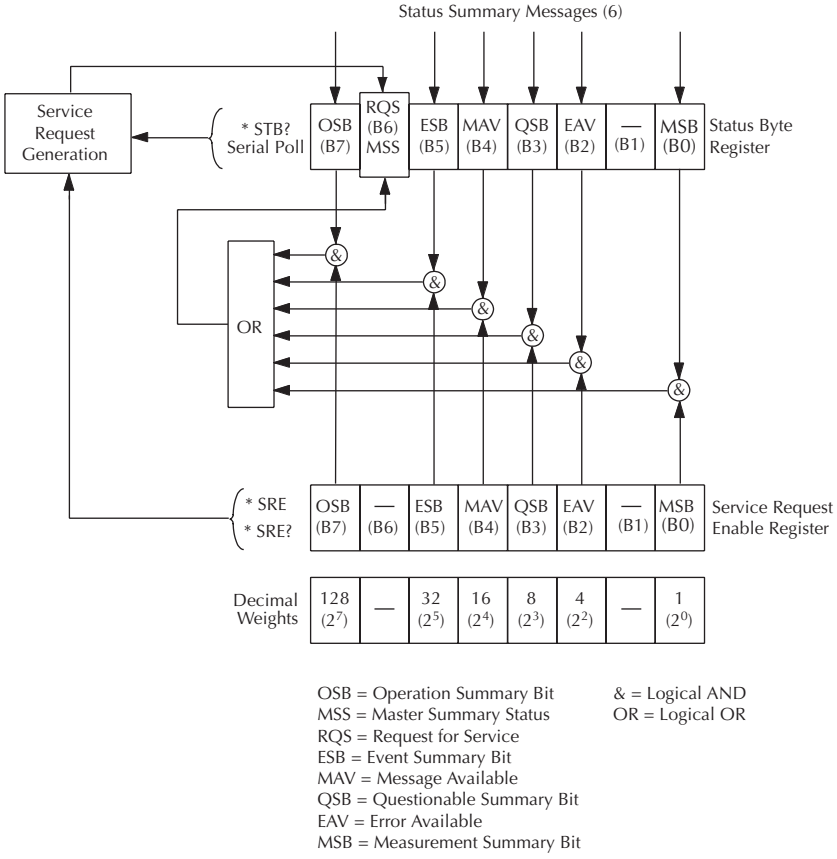

Status byte register

The summary messages from the status registers and queues are used to set or clear the appropriate bits (B0, B2, B3, B4, B5, and B7) of the status byte register. These summary bits do not latch, and their states (0 or 1) are solely dependent on the summary messages (0 or 1). For example, if the standard event register is read, its register will clear. As a result, its summary message will reset to 0, which in turn will reset the ESB bit in the status byte register.

The bits of the status byte register are described as follows:

- **Bit B0, measurement status (MSB)** — Set summary bit indicates that an enabled measurement event has occurred.
- **Bit B1** — Not used.
- **Bit B2, error available (EAV)** — Set summary bit indicates that an error or status message is present in the error queue.
- **Bit B3, questionable summary bit (QSB)** — Set summary bit indicates that an enabled questionable event has occurred.
- **Bit B4, message available (MAV)** — Set summary bit indicates that a response message is present in the output queue.
- **Bit B5, event summary bit (ESB)** — Set summary bit indicates that an enabled standard event has occurred.
- **Bit B6, request service (RQS)/master summary status (MSS)** — Set bit indicates that an enabled summary bit of the status byte register is set.
- **Bit B7, operation summary (OSB)** — Set summary bit indicates that an enabled operation event has occurred.

Depending on how it is used, bit B6 of the status byte register is either the request for service (RQS) bit or the master summary status (MSS) bit:

- When using the serial poll sequence of Model 6485 to obtain the status byte (a.k.a. serial poll byte), B6 is the RQS bit. See "Serial polling and SRQ," page 10-9 for details on using the serial poll sequence.
- When using the *STB? command (Table 10-3) to read the status byte, B6 is the MSS bit.

Service request enable register

The generation of a service request is controlled by the service request enable register. This register is programmed by you and is used to enable or disable the setting of bit B6 (RQS/MSS) by the status summary message bits (B0, B2, B3, B4, B5, and B7) of the status byte register. As shown in Figure 10-3, the summary bits are logically ANDed (&) with the corresponding enable bits of the service request enable register. When a set (1) summary bit is ANDed with an enabled (1) bit of the enable register, the logic "1" output is applied to the input of the OR gate and, therefore, sets the MSS/RQS bit in the status byte register.

The individual bits of the service request enable register can be set or cleared by using the *SRE common command. To read the service request enable register, use the *SRE? query command. The service request enable register clears when power is cycled or a parameter value of 0 is sent with the *SRE command (i.e. *SRE 0). The commands to program and read the SRQ enable register are listed in Table 10-6.

Serial polling and SRQ

Any enabled event summary bit that goes from 0 to 1 will set bit B6 and generate an SRQ (service request). In your test program, you can periodically read the status byte to check if an SRQ has occurred and what caused it. If an SRQ occurs, the program can, for example, branch to an appropriate subroutine that will service the request.

Typically, SRQs are managed by the serial poll sequence of Model 6485. If an SRQ does not occur, bit B6 (RQS) of the status byte register will remain cleared, and the program will simply proceed normally after the serial poll is performed. If an SRQ does occur, bit B6 of the status byte register will set, and the program can branch to a service subroutine when the SRQ is detected by the serial poll.

The serial poll automatically resets RQS of the status byte register. This allows subsequent serial polls to monitor bit B6 for an SRQ occurrence generated by other event types. After a serial poll, the same event can cause another SRQ, even if the event register that caused the first SRQ has not been cleared.

The serial poll does not clear MSS. The MSS bit stays set until all status byte summary bits are reset.

SPE, SPD (serial polling)

The SPE, SPD general bus command is used to serial poll Model 6485. Serial polling obtains the serial poll byte (status byte). Typically, serial polling is used by the controller to determine which of several instruments has requested service with the SRQ line.

Status byte and service request commands

The commands to program and read the status byte register and service request enable register are listed in Table 10-3. For details on programming and reading registers, see "Programming enable registers," page 10-5, and "Reading registers," page 10-6.

To reset the bits of the service request enable register to 0, use 0 as the parameter value for the *SRE command (i.e. *SRE 0).

Table 10-3
Common commands — status byte and service request enable registers

Command	Description	Default
*STB?	Read status byte register.	
*SRE <NDN> or <NRf>	Program the service request enable register: <NDN> = #Bxx…x Binary format (each x = 1 or 0) = #Hx Hexadecimal format (x = 0 to FF) = #Qx Octal format (x = 0 to 377) <NRf> = 0 to 255 Decimal format	(Note)
*SRE?	Read the service request enable register	

Note: *CLS and STATus:PRESet have no effect on the service request enable register.

Programming example — set MSS (B6) when error occurs

The first command of the following sequence enables EAV (error available). When an invalid command is sent (line 4), bits B2 (EAV) and B6 (MSS) of the status byte register set to 1. The last command reads the status byte register using the binary format (which directly indicates which bits are set). The command to select format (FORMat:SREGister) is documented in Table 10-2. To determine the exact nature of the error, you will have to read the error queue (see "Queues," page 10-18).

```
*CLS                        ' Clear Error Queue.
*SRE 4                      ' Enable EAV.
FORM:SREG BIN               ' Select binary format.
BadCommand                  ' Generate error.
*STB?                       ' Read Status Byte Register.
```

NOTE *An example program to demonstrate serial polling (Generating SRQ on buffer full) is provided in Appendix E.*

Status register sets

As shown in Figure 10-1, there are four status register sets in the status structure of Model 6485; standard event status, operation event status, measurement event status, and questionable event status.

Register bit descriptions

Standard event status

The used bits of the standard event register (Figure 10-4) are described as follows:

- **Bit B0, operation complete** — Set bit indicates that all pending selected device operations are completed and Model 6485 is ready to accept new commands. This bit only sets in response to the *OPC? query command. See Section 12 for details on *OPC and *OPC?.
- **Bit B2, query error (QYE)** — Set bit indicates that you attempted to read data from an empty output queue.
- **Bit B3, device-dependent error (DDE)** — Set bit indicates that an instrument operation did not execute properly due to some internal condition.
- **Bit B4, execution error (EXE)** — Set bit indicates that Model 6485 detected an error while trying to execute a command.
- **Bit B5, command error (CME)** — Set bit indicates that a command error has occurred.
  Command errors include:
  → IEEE-488.2 syntax error — Model 6485 received a message that does not follow the defined syntax of the IEEE-488.2 standard.

Figure 10-4
Standard event status

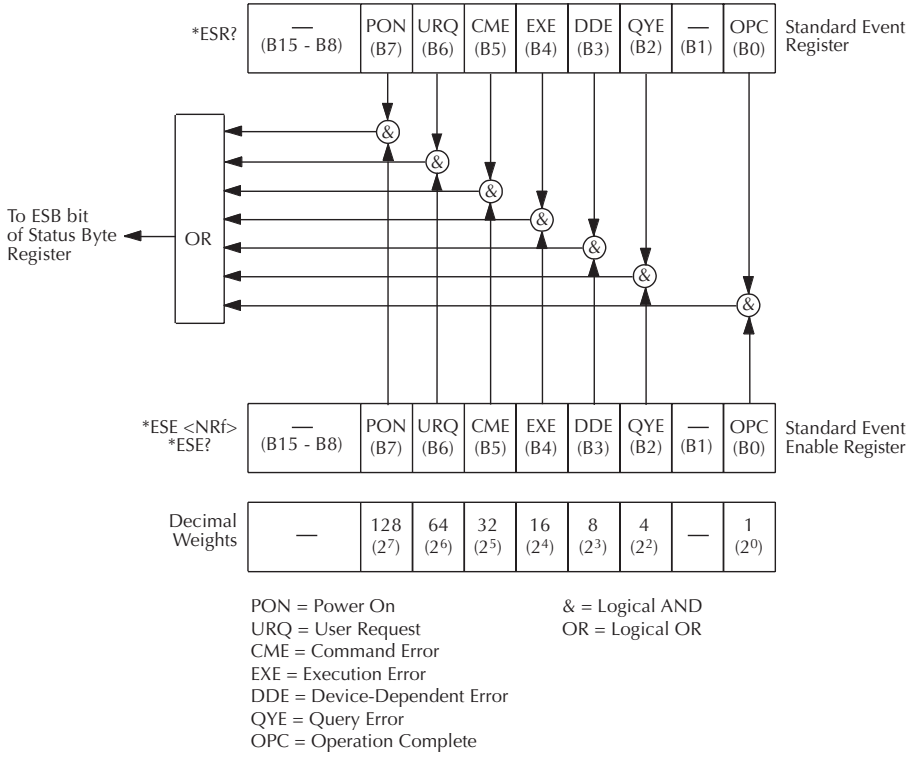

→ Semantic error — Model 6485 received a command that was misspelled or received an optional IEEE-488.2 command that is not implemented.
→ The instrument received a Group Execute Trigger (GET) inside a program message.

- **Bit B6, user request (URQ)** — Set bit indicates that the LOCAL key on Model 6485 front panel was pressed.
- **Bit B7, power ON (PON)** — Set bit indicates that Model 6485 has been turned off and turned back on since the last time this register has been read.

Operation event status

The used bits of the operation event register (Figure 10-5) are described as follows:

- **Bit B0, calibrating** — Set bit indicates that Model 6485 is calibrating.
- **Bit B5, waiting for trigger event (Trig)** — Set bit indicates that Model 6485 is in the trigger layer waiting for a TLINK trigger event to occur.
- **Bit B6, waiting for arm event (Arm)** — Set bit indicates that Model 6485 is in the arm layer waiting for an arm event to occur.
- **Bit B10, idle state (Idle)** — Set bit indicates Model 6485 is in the idle state.

Figure 10-5
Operation event status

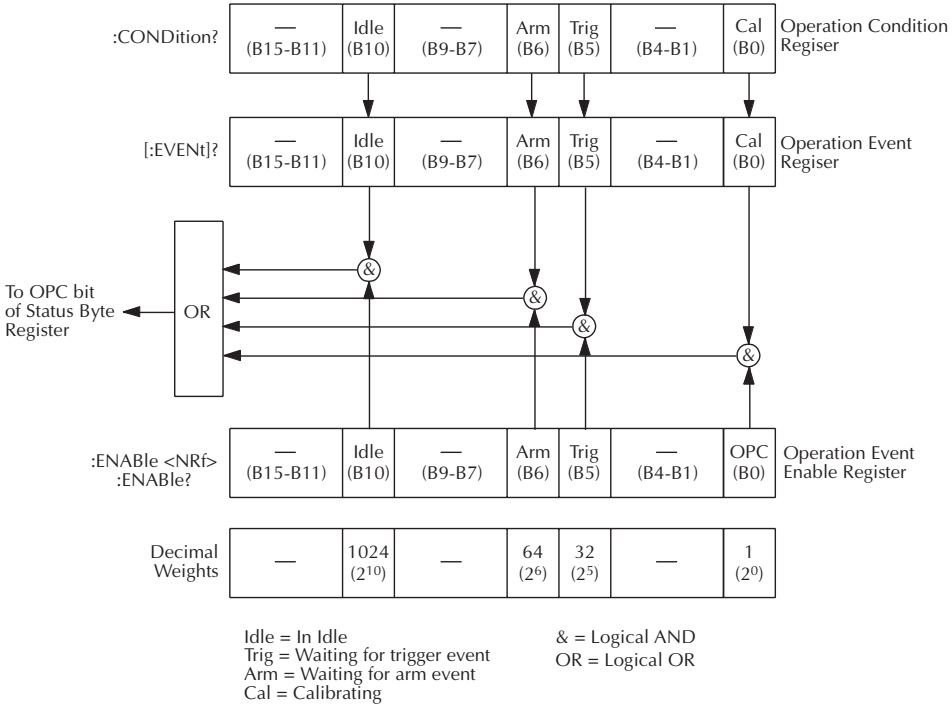

Measurement event status

The used bits of the measurement event register (Figure 10-6) are described as follows:

- **Bit B1, low limit 1 fail (LL1F)** — Set bit indicates that the low limit 1 test has failed.
- **Bit B2, high limit 1 fail (HL1F)** — Set bit indicates that the high limit 1 test has failed.
- **Bit B3, low limit 2 fail (LL2F)** — Set bit indicates that the low limit 2 test has failed.
- **Bit B4, high limit 2 fail (HL2F)** — Set bit indicates that the high limit 2 test has failed.
- **Bit B5, limits pass (LP)** — Set bit indicates that all limit tests passed.
- **Bit B6, reading available (RAV)** — Set bit indicates that a reading was taken and processed.
- **Bit B7, reading overflow (ROF)** — Set bit indicates that the reading exceeds the selected measurement range of Model 6485.
- **Bit B8, buffer available (BAV)** — Set bit indicates that there are at least two readings in the buffer.
- **Bit B9, buffer full (BFL)** — Set bit indicates that the buffer is full.
- **Bit B10, input overvoltage (IOV)** — Set bit indicates there is an input over voltage condition.

Figure 10-6
Measurement event status

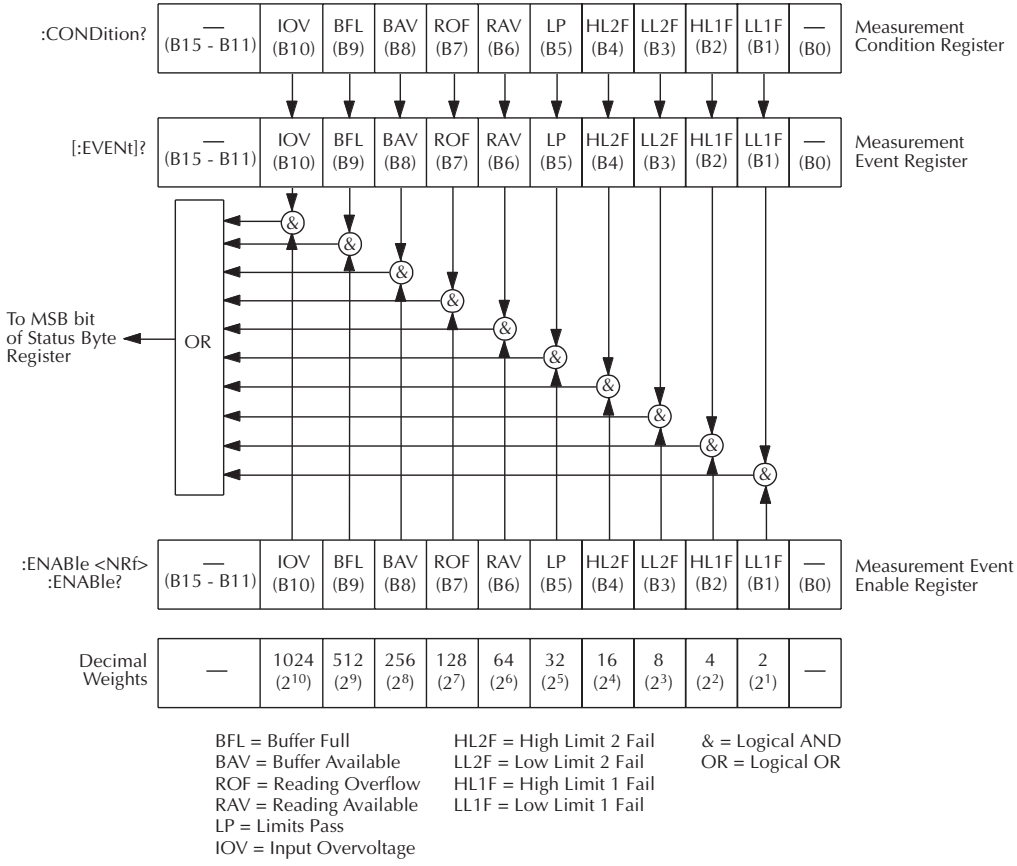

Questionable event status

The used bits of the questionable event register (Figure 10-7) are described as follows:

- **Bit B7, calibration summary (Cal)** — Set bit indicates that an invalid calibration constant was detected during the power-up sequence. This error will clear after successful calibration of Model 6485.
- **Bit B14, command warning (Warn)** — Set bit indicates that a signal oriented measurement command parameter has been ignored.

Figure 10-7
Questionable event status

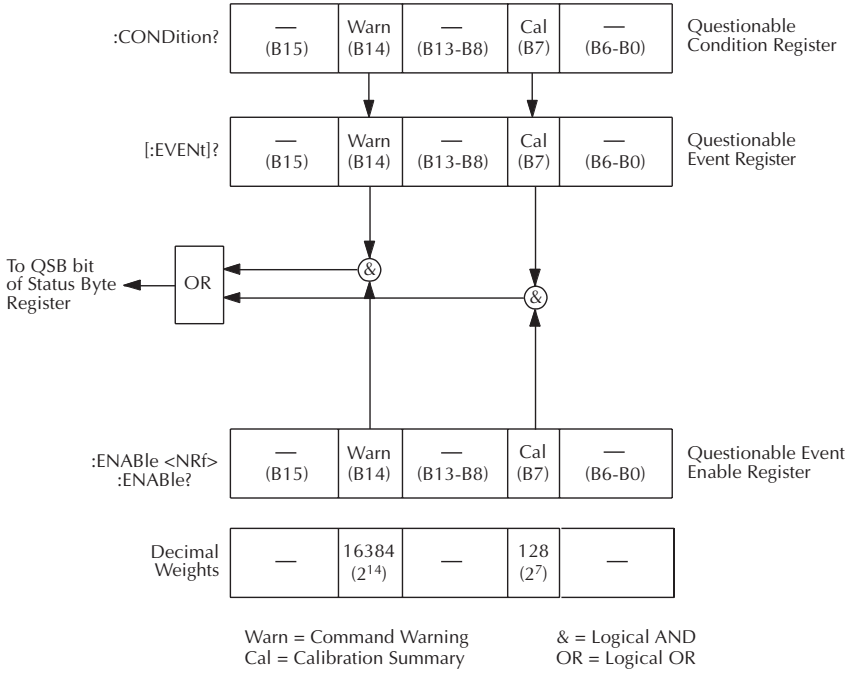

Condition registers

As Figure 10-1 shows, each status register set (except the standard event register set) has a condition register. A condition register is a real-time, read-only register that constantly updates to reflect the present operating conditions of the instrument. For example, while Model 6485 is in the idle state, bit B10 (Idle) of the operation condition register will be set. When the instrument is taken out of idle, bit B10 clears.

The commands to read the condition registers are listed in Table 10-4. For details on reading registers, see "Reading registers," page 10-6.

Table 10-4
Common and SCPI commands — condition registers

Command	Description
STATus	STATus subsystem:
:OPERation:CONDition?	Read operation condition register.
:MEASurement:CONDition?	Read measurement condition register.
:QUEStionable:CONDition?	Read questionable condition register.

Event registers

As Figure 10-1 shows, each status register set has an event register. When an event occurs, the appropriate event register bit sets to 1. The bit remains latched to 1 until the register is reset. Reading an event register clears the bits of that register. *CLS resets all four event registers.

The commands to read the event registers are listed in Table 10-5. For details on reading registers, see "Reading registers," page 10-6.

Table 10-5
Common and SCPI commands — event registers

Command	Description
*ESR?	Read standard event status register.
STATus	STATus subsystem:
:OPERation:[:EVENt]?	Read operation event register.
:MEASurement:[:EVENt]?	Read measurement event register.
:QUEStionable:[:EVENt]?	Read questionable event register.

Note: Power-up and *CLS resets all bits of all event registers to 0. STATus:PRESet has no effect.

Event enable registers

As Figure 10-1 shows, each status register set has an enable register. Each event register bit is logically ANDed (&) to a corresponding enable bit of an enable register. Therefore, when an event bit is set and the corresponding enable bit is set (as programmed by the user), the output (summary) of the register will set to 1, which in turn sets the summary bit of the status byte register.

The commands to program and read the event enable registers are listed in Table 10-6. For details on programming and reading registers, see "Programming enable registers," page 10-5 and "Reading registers," page 10-6.

NOTE *The bits of any enable register can be reset to 0 by sending the 0 parameter value with the appropriate enable command (i.e. STATus:OPERation:ENABle 0).*

Table 10-6
Common and SCPI commands — event enable registers

Command	Description
*ESE <NDN> or <NRf>	Program standard event enable register (see "*Parameters*").
*ESE?	Read standard event enable register.
STATus	STATus subsystem:
:OPERation	Operation event enable register:
:ENABle <NDN> or <NRf>	Program enable register (see "*Parameters*").
:ENABle?	Read enable register.
:MEASurement	Measurement event enable register:
:ENABle <NDN> or <NRf>	Program enable register (see "*Parameters*").
:ENABle?	Read enable register.
:QUEStionable	Questionable event enable register:
:ENABle <NDN> or <NRf>	Program enable register (see "*Parameters*").
:ENABle?	Read measurement event enable register:

Parameters:

<NDN>	=	#Bxx…x	Binary format (each x = 1 or 0)
	=	#Hx	Hexadecimal format (x = 0 to FFFF)
	=	#Qx	Octal format (x = 0 to 177777)
<NRf>	=	0 to 65535	Decimal format

Note: Power-up and STATus:PRESet resets all bits of all enable registers to 0. *CLS has no effect.

Programming example — program and read registers

This command sequence programs and reads the measurement registers. Registers are read using the binary format (which directly indicates which bits are set). The command to select format (FORMat:SREGister) is documented in Table 10-2.

```
FORM:SREG BIN                ' Select binary format to read
                             ' registers.
STAT:MEAS:ENAB 512           ' Enable BFL (buffer full).
STAT:MEAS:COND?              ' Read Measurement Condition Register.
STAT:MEAS?                   ' Read Measurement Event Register.
```

Queues

Model 6485 uses two queues which are first-in, first-out (FIFO) registers:

- Output queue — Used to hold reading and response messages.
- Error queue — Used to hold error and status messages.

Model 6485 status model (Figure 10-1) shows how the two queues are structured with the other registers.

Output queue

The output queue holds data that pertains to the normal operation of the instrument. For example, when a query command is sent, the response message is placed in the output queue.

When data is placed in the output queue, the message available (MAV) bit in the status byte register sets. A data message is cleared from the output queue when it is read. The output queue is considered cleared when it is empty. An empty output queue clears the MAV bit in the status byte register.

A message is read from the output queue by addressing Model 6485 to talk after the appropriate query is sent.

Error queue

The error queue holds error and status messages. When an error or status event occurs, a message that defines the error/status is placed in the error queue.

When a message is placed in the error queue, the error available (EAV) bit in the status byte register is set. An error/status message is cleared from the error queue when it is read. The error queue is considered cleared when it is empty. An empty error queue clears the EAV bit in the status byte register.

The error queue holds up to 10 error/status messages. The commands to read the error queue are listed in Table 10-7. When you read a single message in the error queue, the "oldest" message is read and then removed from the queue. If the queue becomes full, the message "350, 'queue overflow'" will occupy the last memory location. On power-up, the error queue is empty. When empty, the message "0, No Error" is placed in the queue.

Messages in the error queue are preceded by a code number. Negative (-) numbers are used for SCPI defined messages, and positive (+) numbers are used for Keithley defined messages. The messages are listed in Appendix B. As shown in Table 10-7, there are commands to read the entire message (code and message) or the code only.

On power-up, all error messages are enabled and will go into the error queue as they occur. Status messages are not enabled and will not go into the queue. As listed in Table 10-7, there are commands to enable and/or disable messages. For these commands, the <list> parameter is used to specify which messages to enable or disable. The messages are specified by their codes. The following examples show various forms for using the <list> parameter.

<list>	= (-110)	Single message
	= (-110:-222)	Range of messages (-110 through -222)
	= (-110:-222, -220)	Range entry and single entry (separated by a comma)

When you enable messages, messages not specified in the list are disabled. When you disable messages, each listed message is removed from the enabled list.

To prevent all messages from entering the error queue, send the enable command along with the null list parameter as follows: STATus:QUEue:ENABle ().

Table 10-7
SCPI commands — error queue

Command	Description	Default
STATus	STATus subsystem:	
:QUEue	Read error queue:	(Note 1)
[:NEXT]?	Read and clear oldest error/status (code and message).	
:ENABle <list>	Specify error and status messages for error queue.	(Note 2)
:ENABle?	Read the enabled messages.	
:DISable <list>	Specify messages not to be placed in queue.	(Note 2)
:DISable?	Read the disabled messages.	
:CLEar	Clear messages from error queue.	
SYSTem	SYSTem subsystem:	
:ERRor	Read error queue:	(Note 1)
[:NEXT]?	Read and clear oldest error/status (code and message).	
:ALL?	Read and clear all errors/status (code and message).	
:COUNt?	Read the number of messages in queue.	
:CODE	Code numbers only:	
[:NEXT]?	Read and clear oldest error/status (code only).	
:ALL?	Read and clear all errors/status (codes only).	
:CLEar	Clear messages from error queue.	

Notes:
1. Power-up and *CLS empties the error queue. STATus:PRESet has no effect.
2. Power-up enables error messages and disables status messages. *CLS and STATus:PRESet have no effect.

Programming example — read error queue

The following command reads the error queue:

```
STAT:QUE?                    ' Read Error Queue.
```

11
Common Commands

Common Commands

Common commands (summarized in Table 11-1) are device commands that are common to all devices on the bus. These commands are designated and defined by the IEEE-488.2 standard.

Table 11-1
IEEE-488.2 common commands and queries

Mnemonic	Name	Description	Ref
*CLS	Clear status	Clears all event registers and error queue.	Section 10
*ESE <NRf>	Event enable command	Program the standard event enable register.	Section 10
*ESE?	Event enable query	Read the standard event enable register.	Section 10
*ESR?	Event status register query	Read the standard event enable register and clear it.	Section 10
*IDN?	Identification query	Returns the manufacturer, model number, serial number, and firmware revision levels of the unit.	A
*OPC	Operation complete command	Set the operation complete bit in the standard event register after all pending commands have been executed.	B
*OPC?	Operation complete query	Places an ASCII “1” into the output queue when all pending selected device operations have been completed.	B
*OPT?	Option query	Returns model number of any installed options.	
*RCL <NRf>	Recall command	Returns Model 6485 to the user-saved setup.	C
*RST	Reset command	Returns Model 6485 to the *RST default conditions.	D
*SAV <NRf>	Save command	Saves the present setup as the user-saved setup.	C
*SRE <NRf>	Service request enable command	Programs the service request enable register.	Section 10
*SRE?	Service request enable query	Reads the service request enable register.	Section 10
*STB?	Status byte query	Reads the status byte register.	Section 10
*TRG	Trigger command	Sends a bus trigger to Model 6485.	E
*TST?	Self-test query	Performs a checksum test on ROM and returns the result.	F
*WAI	Wait-to-continue command	Wait until all previous commands are executed.	G

A) IDN? — identification query

Reads identification code

The identification code includes the manufacturer, model number, serial number, and firmware revision levels and is sent in the following format:

KEITHLEY INSTRUMENTS INC., MODEL 6485, xxxxxxx, yyyyy/zzzzz/w

Where: xxxxxxx is the serial number.
yyyyy/zzzzz is the firmware revision levels of the digital board ROM and display board ROM. Note that yyyyy also provides build date and time information. w is the board revision level.

B) OPC — operation complete

Sets OPC bit

OPC? — operation complete query

Places a "1" in output queue

When *OPC is sent, the OPC bit in the standard event register will set after all pending command operations are complete. When *OPC? is sent, an ASCII "1" is placed in the output queue after all pending command operations are complete.

Typically, either one of these commands is sent after the INITiate command. The INITiate command is used to take the instrument out of idle in order to perform measurements. While operating within the trigger model layers, all sent commands (except DCL, SDC, IFC, SYSTem:PRESet, *RST, GET and ABORt) will not execute.

After all programmed operations are completed, the instrument returns to the idle state at which time all pending commands (including *OPC and/or *OPC?) are executed. After the last pending command is executed, the OPC bit and/or an ASCII "1" is placed in the output queue.

Programming example — The following command sequence will perform 10 measurements. After the measurements are completed (in approximately 10 seconds), an ASCII "1" will be placed in the output queue.

```
*RST                        ' Return 6485 to RST defaults (idle).
TRIG:DEL 1                  ' Set trigger delay for 1 second.
ARM:COUN 10                 ' Program for 5 measurements and stop.
INIT                        ' Start measurements.
*OPC?                       ' Send *OPC?.
```

C) SAV <NRf> — save / RCL <NRf> — recall

Save present setup in memory
Return to setup stored in memory

Parameters

0 = Memory location 0
1 = Memory location 1
2 = Memory location 2

Use the *SAV command to save the present instrument setup configuration in memory for later recall. Any control affected by *RST can be saved by the *SAV command. The *RCL command is used to restore the instrument to the saved setup configuration. Three setup configurations can be saved and recalled.

Model 6485 ships from the factory with SYSTem:PRESet defaults loaded into the available setup memory. If a recall error occurs, the setup memory defaults to the SYSTem:PRESet values.

Programming example:

```
*SAV 2     ' Save present setup in memory location 2.
*RST       ' Set 6485 to RST defaults.
*RCL 2     ' Return (recall) 6485 to setup stored in memory location 2.
```

D) RST — reset

Return Model 6485 to RST defaults

When the *RST command is sent, Model 6485 performs the following operations:

1. Returns Model 6485 to the RST default conditions (see “Default” column of SCPI tables).
2. Cancels all pending commands.
3. Cancels response to any previously received *OPC and *OPC? commands.

E) TRG — trigger

Send bus trigger to Model 6485

Use the *TRG command to issue a GPIB trigger to Model 6485. It has the same effect as a group execute trigger (GET).

Use the *TRG command as an event to control operation. Model 6485 reacts to this trigger if BUS is the programmed arm control source. The control source is programmed from the TRIGger subsystem.

NOTE Details on triggering are covered in Section 7.

Programming example — The following command sequence configures Model 6485 to be controlled by bus triggers. The last line, which sends a bus trigger, triggers one measurement. Each subsequent bus trigger will also trigger a single measurement.

```
*RST                        ' Restore RST defaults.
ARM:SOUR BUS                ' Select BUS control source.
ARM:COUN INF                ' Set arm layer count to infinite.
INIT                        ' Take 6485 out of idle.
*TRG                        ' Trigger one measurement.
```

F) TST? — self-test query

Run self test and read result

Use this query command to perform a checksum test on ROM. The command places the coded result (0 or 1) in the output queue. When Model 6485 is addressed to talk, the coded result is sent from the output queue to the computer.

A returned value of zero (0) indicates that the test passed, and a value of one (1) indicates that the test failed.

G) WAI — wait-to-continue

Wait until previous commands are completed

Effectively, the *WAI command is a No-Op (no operation) for Model 6485 and thus, does not need to be used.

Two types of device commands exist:

- Sequential commands — A command whose operations are allowed to finish before the next command is executed.
- Overlapped commands — A command that allows the execution of subsequent commands while device operations of the overlapped command are still in progress.

The *WAI command is used to suspend the execution of subsequent commands until the device operations of all previous overlapped commands are finished. The *WAI command is not needed for sequential commands.

12
SCPI Signal Oriented Measurement Commands

The signal oriented measurement commands are used to acquire readings. You can use these high level instructions to control the measurement process. These commands are summarized in Table 12-1.

NOTE *The readings acquired by these commands depend on which data elements are selected. (See Table 14-3 for details.)*

Table 12-1
Signal oriented measurement command summary

Command	Description	Ref
CONFigure[:<function>]	Places Model 6485 in a "one-shot" measurement mode. <function> = CURR[:DC]	A
CONFigure?	Queries the selected function. Returns 'CURR'.	
FETCh?	Requests the latest reading(s).	B
READ?	Performs an INITiate and a :FETCh?.	C
MEASure[:<function>]?	Performs a CONFigure:<function>, and a :READ?.	D

A) CONFigure[:<function>] Configure Model 6485 for "one-shot" measurements

<function> = CURRent[:DC] Configure current

This command configures the instrument for "one-shot" measurements. Each subsequent READ? command will then trigger a single measurement and acquire the reading (see READ? for details).

If the instrument is in idle, this command will execute immediately. If the instrument is not in idle, execution of the command will execute when the operation returns to the idle state.

When this command is executed, Model 6485 will be configured as follows:

- The specified function is selected.
- All controls related to the selected function are defaulted to the *RST values.
- The event control sources of the trigger model are set to immediate.
- The arm and trigger count values of the trigger model are set to one.
- The delay of the trigger model is set to zero.
- Model 6485 is placed in the idle state.
- All math calculations are disabled.
- Buffer operation is disabled. A storage operation presently in process will be aborted.
- Autozero is enabled.

This command is automatically asserted when the :MEASure? command is sent.

Programming example — The following command sequence selects and configures Model 6485 for "one-shot" measurements. Each subsequent READ? triggers a single measurement and requests the reading.

```
CONF:CURR                    ' Perform CONFigure operations.
READ?                        ' Trigger measurement and request reading.
```

B) FETCh? Request latest reading

This command requests the latest post-processed readings. After sending this command and addressing Model 6485 to talk, the readings are sent to the computer. This command does not affect the instrument setup.

This command does not trigger a measurement. The command simply requests the last group of readings. Note that this command can repeatedly return the same readings. Until there is a new reading(s), this command continues to return the old reading(s). If your application requires a "fresh" reading, use the :READ? command.

This command is automatically asserted when the :READ? or :MEASure? command is sent.

C) READ? Trigger measurement(s) and request reading(s)

This command is used to trigger and acquire readings. The number of readings depends on how the trigger model is configured. For example, if configured for 20 measurements (arm count 1, trigger count 20), 20 sets of readings will be acquired.

When this command is sent, the following commands execute in the order they are presented:

- INITiate
- FETCh?

If the instrument is in the idle state, INITiate takes the instrument out of idle to perform the programmed number measurements. If the instrument is not in the idle state, execution of this command will wait until it goes back into idle.

The FETCh? command is executed to acquire the reading(s). The readings are sent to the computer when Model 6485 is addressed to talk.

NOTE *If the instrument is programmed to perform an infinite number of measurements (arm count or trigger count set to infinite), you cannot use the READ? command to trigger and acquire readings. Use INITiate to start (trigger) the measurement process, send ABORt to abort the measurement process, and then use SENSe:DATA[:LATest]? to return the last (latest) reading.*

D) MEASure[:<function>]? Configure and perform "one-shot" measurement

<function> = CURRent[:DC] Measure current

This command combines all of the other signal oriented measurement commands to perform a "one-shot" measurement and acquire the reading.

When this command is sent, the following commands execute in the order that they are presented.

- CONFigure:<function>
- READ?

When :CONFigure is executed, the instrument goes into a "one-shot" measurement mode. See CONFigure for details.

When READ? is executed, its operations will then be performed. In general, an INITiate is executed to perform the measurement and a FETCh? is executed to acquire the reading. See :READ? for details.

13
DISPlay, FORMat, and SYSTem

- **DISPlay subsystem** — Covers the SCPI commands that are used to control the display.
- **FORMat subsystem** — Covers the SCPI commands to configure the format that readings are sent over the bus.
- **SYSTem subsystem** — Covers miscellaneous SCPI commands.

DISPlay subsystem

The commands in this subsystem are used to control the display over the bus.

Table 13-1
SCPI commands — display

Command	Description	Default	Ref
:DISPlay			
:DIGits <n>	Set display resolution; 4 to 7.	6	Section 4
:DIGits?	Query display resolution.		
:ENABle <b>	Turn front panel display on or off.	(see Note)	A
:ENABle <b>	Query front panel display status.		
[:WINDow[1]]	Path to control user text messages:		
:TEXT		(see Note)	
[:DATA] <a>	Define ASCII message “a” (up to 12 characters).		B
[:DATA]?	Query defined ASCII message.		
:STATe <b>	Enable or disable text message mode.		C
:STATe?	Query text message status.		

Note: *RST and SYSTem:PRESet have no effect on the display circuitry and user-defined text messages.

A) DISPlay:ENABle <b>

With front panel circuitry turned off, the instrument operates at a higher speed. While disabled, the display is frozen and all front panel controls (except LOCAL) are disabled. Normal display operations can be resumed by using :ENABle to enable the display, pressing the LOCAL key, or cycling power.

B) DISPlay:TEXT[:DATA] <a>

Message Types:	String	‘aa…a’ or “aa…a”
	Indefinite Block	#0aa…a
	Definite Block	#XYaa…a

where: Y = number of characters in message (up to 12)
X = number of digits that make up Y (1 or 2)

The display message can be up to 12 characters (ASCII) long. A space is counted as a character. Excess message characters result in an error. Note that for the string type, the message must be enclosed by single or double quotes.

An indefinite block message must be the only command in the program message, or the last command in the program message. If you include a command after an indefinite block

message (on the same line), it will be treated as part of the message and is displayed instead of executed.

C) DISPlay:TEXT:STATe <b>

When the text message mode is enabled, a defined message is displayed. When disabled, the message is removed from the display.

GPIB operation — A user-defined message remains displayed only as long as the instrument is in remote. Taking the instrument out of remote (by pressing LOCAL or sending the GTL (go to local) command) or cycling power cancels the message and disables the text message mode.

RS-232 operation — A user-defined message can be cancelled by sending SYSTem:LOCal, pressing LOCAL, or cycling power.

FORMat subsystem

The commands in this subsystem are used to select the format for transferring data over the bus.

Table 13-2
SCPI commands — data format

Command	Description	Default	Ref
:FORMat			
[:DATA] <type>[,<length>]	Specify data format; ASCii, REAL, 32 or SREal.	ASCii	A
:ELEMents <item list>	Specify data elements; READing, UNITS, TIME, and STATus.	All 4	B
:BORDer <name>	Specify byte order; NORMal or SWAPped.	(see Note)	C
:SREGister <name>	Select data format for reading status registers; ASCii, HEXadecimal, OCTal, or BINary.	ASC	Section 10

Note: *RST default is NORMal. SYSTem:PRESet default is SWAPped.

A) FORMat[:DATA] <type>[,<length>]

Parameters

ASCii	=	ASCII format
REAL, 32	=	Binary IEEE-754 single precision format
SREal	=	Binary IEEE-754 single precision format

NOTE *<length> is not used for the ASCii or SREal parameters. It is optional for the REAL parameter. If you do not use <length> with REAL, <length> defaults to 32 (single precision format). The double precision format (<length> = 64) is not supported by Model 6485.*

The response to READ?, FETCh?, MEASure?, TRACe:DATA?, CALC1:DATA? or CALC2:DATA? over the GPIB can be returned in either the ASCii or binary format. All other queries are returned in ASCii, regardless of the selected format. **Over the RS-232 interface, only the ASCII format is allowed.**

NOTE *Regardless of which data format for output strings is selected, the instrument will only respond to input commands using the ASCII format.*

ASCII data format

The ASCII data format is in a direct readable form for the operator. Most BASIC languages easily convert ASCII mantissa and exponent to other formats. However, some speed is compromised to accommodate the conversion. Figure 13-1 shows an example ASCII string that includes all the data elements. See :ELEMents for information on the data elements.

Figure 13-1 also shows the byte order of the data string. Data elements not specified by the :ELEMents command are simply not included in the string.

Figure 13-1
ASCII data format

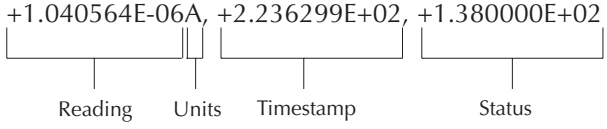

IEEE-754 single precision format

REAL 32 or SREal will select the binary IEEE-754 single precision data format. Figure 13-1 shows the normal byte order format for each data element. For example, if all three data elements are selected, the data string for each reading conversion is made up of three 4-byte data blocks. Note that the data string for each reading conversion is preceded by a 2-byte header that is the binary equivalent of an ASCII # sign and 0. Figure 16-2 does not show the byte for the terminator that is attached to the end of each data string. Note that the byte order of the data string can be sent in reverse order.

Figure 13-2
IEEE-754 single precision data format (32 data bits)

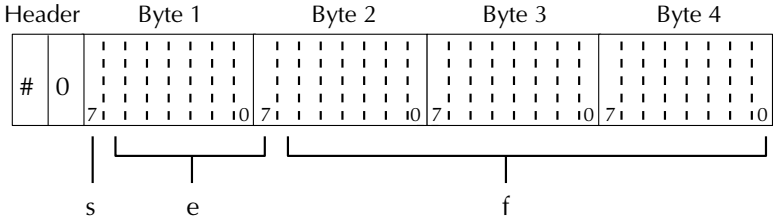

s = sign bit (0 = positive, 1 = negative)
e = exponent bits (8)
f = fraction bits (23)

Normal byte order shown. For swapped byte order, bytes sent in reverse order: Header, Byte 4, Byte 3 Byte 2, Byte 1.

The header and terminator are sent only once for each READ?.

During binary transfers, never un-talk Model 6485 until after the data is read (input) to the computer. Also, to avoid erratic operation, the readings of the data string (and terminator) should be acquired in one piece. The header (#0) can be read separately before the rest of the string.

The number of bytes to be transferred can be calculated as follows:

Bytes = 2 + (Rdgs x 4) + 1

where: 2 is the number of bytes for the header (#0).
Rdgs is the product of the number of selected data elements, arm count and trigger count.
4 is the number of bytes for each reading.
1 is the byte for the terminator.

For example, assume the instrument is configured to perform 10 measurements and send them to the computer using the binary format:

Bytes = 2 + (10 x 4) + 1
= 43

B) FORMat:ELEMents <item list>

Parameters	READing	=	Current reading
	UNITs	=	Units (always Amps)
	TIME	=	Timestamp
	STATus	=	Status information

The specified elements are included in the data string in response to :FETCh?, :READ?, :MEASure? and :TRACe:DATA?. Note that each element in the item list must be separated by a comma (i.e. send ":ELEMents READing, UNITs, TIME, STATus" to include all elements in the data string. The elements for the ASCii format are shown in Figure 16-1.

An overflow or overvoltage reading is returned as +9.9E37. When a specified data element has invalid data associated with it, NAN (Not A Number) will be the response. NAN is returned as +9.91E37.

Units — Units reference the returned readings units of measure. This will always be in amps with the current reading in scientific notation.

Timestamp — Timestamp references the returned data string to a point in time. The timestamp operates as a timer that starts at zero seconds when the instrument is turned on, or when the timestamp is reset (SYSTem:TIME:RESet). After 99,999.99 seconds, the timer resets to zero and starts over.

For buffer readings, timestamp can be referenced to the first reading stored in the buffer (absolute format) which is timestamped at 0 seconds, or to the time between each stored reading (delta format). The TRACe:TSTamp:FORMat command is used to select the timestamp format.

Status — The status word provides information about Model 6485 operation. The 16-bit status word is sent in decimal form. The decimal value has to be converted to the binary equivalent to determine the state of each bit in the word. For example, if the returned status value is 9, the binary equivalent is 00000001001. Bits 0 and 3 are set. The bits are explained as follows:

Bit 0 (OFLO) — Set to 1 if measurement performed while in over-range (overflowed reading).
Bit 1 (Filter) — Set to 1 when measurement performed with the averaging filter enabled.
Bit 2 (Math) — Set to 1 when measurement performed with CALC1 enabled.
Bit 3 (Null) — Set to 1 if null for CALC2 is enabled.
Bit 4 (Limits) — Set to 1 if a limit test (CALC2) is enabled.
Bits 5 and 6 (Limit Results) — Provides limit test results:

Bit 6	Bit 5	
0	0	All limit tests passed
0	1	CALC2:LIM1 test failed
1	0	CALC2:LIM2 test failed

Bit 7 (Overvoltage) — Set to 1 if measurement performed with an overvoltage condition on the input.

Bit 9 (Zero Check) — Set to 1 when zero check is enabled.

Bit 10 (Zero Correct) — Set to 1 when zero correct is enabled.

Example — The ASCII data string contains all three data elements. The status value of 138 has a binary equivalent of 01001010, which indicates that bits B1, B3, and B7 are set. Therefore, the reading is 1.04056uA with null (REL) and the AVG filter enabled. The reading was taken 223.6299 seconds after the instrument was turned on.

C) FORMat:BORDer <name>

Parameters NORMal = Normal byte order for IEEE-754 binary format
SWAPped = Reverse byte order for IEEE-754 binary format

For normal byte order, the data format for each element is sent as follows:

Byte 1 Byte 2 Byte 3 Byte 4

For reverse byte order, data is sent as follows:

Byte 4 Byte 3 Byte 2 Byte 1

The “#0” header is not affected by this command. The header is always sent at the beginning of the data string for each measurement conversion.

The ASCII data format can only be sent in the normal byte order. The SWAPped selection is ignored when the ASCII format is selected.

NOTE *The SWAPped byte order must be used when transmitting binary data to any IBM PC.*

SYSTem subsystem

Table 13-3
SCPI commands — system

Command	Description	Default	Ref
:SYSTem			
:ZCHeck <b>	Enable or disable zero check.	ON	Section 2
:ZCORrect	Zero correct:		Section 2
[:STATe] <b>	Enable or disable zero correct.	OFF	
:ACQuire	Acquire a new zero correct value.		
:PRESet	Return to SYSTem:PRESet defaults.		A
:LFRequency <freq>	Select power line frequency; 50 or 60 (Hz).		Section 1
:AUTO <b>	Turn automatic frequency ON or OFF.		
:AZERo	Path to control autozero:		Section 2
[:STATe] <b>	Enable or disable autozero.	ON	
:TIME	Timestamp:		
:RESet	Reset timestamp to 0 seconds.		B
:POSetup <name>	Select power-on setup; RST, PRESet or SAVx (where x = 0 to 4).		C
:VERSion?	Query SCPI revision level.		D
:ERRor	Read messages in error queue:	(see Note)	Section 10
[:NEXT]?	Return and clear oldest error (code and message).		
:ALL?	Return and clear all errors (code and message).		
:COUNt?	Return the number of errors.		
:CODE	Error code numbers only:		
[:NEXT]?	Return and clear oldest error (code only).		
:ALL?	Return and clear all errors (codes only).		
:CLEar	Clear messages from error queue.		Section 10
:KEY <NRf>	Simulate key-press; see Figure 13-3.		E
	RS-232 interface:		Section 9
:LOCal	Take Model 6485 out of remote (RS-232 only). Equivalent to GTL.		
:REMote	Put Model 6485 in remote (RS-232 only). Equivalent to REN.		
:RWLock	Enable local lockout (RS-232 only). Equivalent to LLO.		

Note: Clearing the error queue - power-up and *CLS clears the error queue. *RST, SYSTem:PRESet, and STATus:PRESet have no effect on the error queue.

A) SYSTem:PRESet

Returns the instrument to states optimized for front panel operation. SYSTem:PRESet defaults are listed in the SCPI tables in Section 15.

B) SYSTem:TIME:RESet

Resets the absolute timestamp to 0 seconds. The timestamp also resets when power is cycled, or after the instrument is on for 99,999.99 seconds. The TRACe:TSTamp:FORMat command is used to select the absolute timestamp. See Section 6 (Buffer) for details.

C) SYSTem:POSetup <name>

Parameters	RST	Power-up to *RST defaults
	PRESet	Power-up to SYSTem:PRESet defaults
	SAVx	Power-up to setup stored in memory (x = memory location 0, 1 or 2)

The *RST and SYSTem:DEFaults are listed in the SCPI tables in the Section 15. A setup is saved in memory using the *SAV command. See Section 12 (Common Commands) for details.

D) SYSTem:VERSion

Read the version of the SCPI standard being used by Model 6485. Example response message: 1996.0.

E) SYSTem:KEY <NRf>

Parameters

1 = CONFIG/LOCAL key	17 = MENU key
2 = MEDN key	18 = COMM key
3 = AVG key	19 = DISP key
4 = MX + B key	20 = TRIG key
5 = M/X + B key	21 = HALT key
6 = LOG key	22 = DIGITS key
7 = REL key	23 = RATE key
8 = ZCHK key	24 = Cursor left arrow key
9 = -------	25 = -------
10 = -------	26 = SAVE key
11 = RANGE up arrow key	27 = SETUP key
12 = AUTO key	28 = STORE key
13 = RANGE down arrow key	29 = RECALL key
14 = ENTER key	30 = LIMIT key
15 = Cursor right arrow key	31 = AZERO key
16 = ZCOR key	32 = EXIT key

This command is used to simulate front panel key presses. For example, send the following command to simulate pressing the “MEDN” key: SYSTem:KEY 2. The key-press codes are also shown in Table 13-3.

The queue for the :SYST:KEY? query command can only hold one key-press. When :SYST:KEY? is sent and Model 6485 is addressed to talk, the key-press code number for the last :SYST:KEY command is sent to the computer. The value is -1 if a :SYST:KEY command has not been sent since the last time the unit was placed in remote.

Figure 13-3
Key-press codes

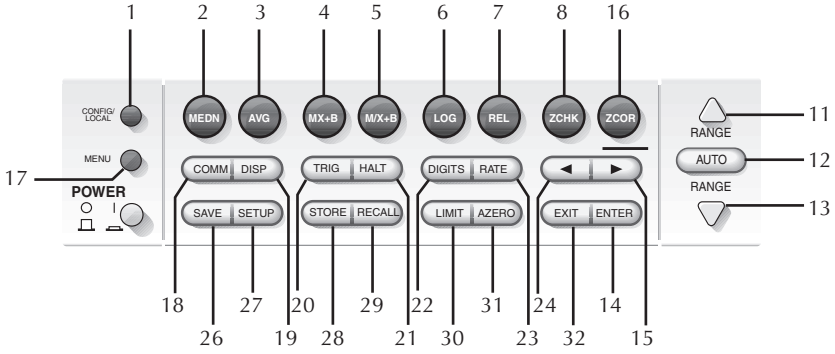

14
SCPI Reference Tables

- **Table 14-1** — CALCulate command summary
- **Table 14-2** — DISPlay command summary
- **Table 14-3** — FORMat command summary
- **Table 14-4** — SENSe command summary
- **Table 14-5** — STATus command summary
- **Table 14-6** — SYSTem command summary
- **Table 14-7** — TRACe command summary
- **Table 14-8** — TRIGger command summary
- **Calibration commands** — See Appendix H

General notes

- Brackets ([ ]) are used to denote optional character sets. These optional characters do not have to be included in the program message. Do not use brackets in the program message.
- Angle brackets (< >) are used to indicate parameter type. Do not use angle brackets in the program message.
- The Boolean parameter (<b>) is used to enable or disable an instrument operation. 1 or ON enables the operation, and 0 or OFF disables the operation.
- Upper case characters indicated the short-form version for each command word.
- Default parameter — Listed parameters are both the *RST and SYSTem:PRESet defaults, unless noted otherwise. Parameter notes are located at the end of each table.
- Ref — Refers you to the section (Sec) that provides operation information for that command or command subsystem.
- SCPI — A checkmark (√) indicates that the command and its parameters are SCPI confirmed. An unmarked command indicates that it is a SCPI command, but does not conform to the SCPI standard set of commands. It is not a recognized command by the SCPI consortium. SCPI confirmed commands that use one or more non-SCPI parameters are explained by notes.

Table 14-1
CALCulate command summary

Command	Description	Default parameter	Ref Section	SCPI
:CALCulate[1]	Path to configure and control CALC1 calculations.		5	√
:FORMat <name>	Select math format; MXB (mX+b) or RECiprocal (m/X+b), or LOG10.	MXB		√
:FORMat?	Query math format.			√
:KMATh	Configure math calculations:			
:MMFactor <NRf>	Set “m” for mX+b and m/X+b calculation; -9.99999e20 to 9.99999e20.	1.0		
:MMFactor?	Query “m” factor.			
:MBFactor <NRf>	Set “b” for mX+b and m/X+b calculation; -9.99999e20 to 9.99999e20.	0.0		
:MBFactor?	Query “b” factor.			
:MUNits <name>	Specify units for mX+b or m/X+b result: 1 character: A–Z, ‘[‘=Ω, ‘\’=°, ‘]’=%.	“X”		
:MUNits?	Query units.			
:STATe <b>	Enable or disable CALC1 calculation.	OFF		√
:STATe?	Query state of CALC1 calculation.			√

Table 14-1 (continued)
CALCulate command summary

Command	Description	Default parameter	Ref Section	SCPI
:CALCulate[1](continued)				
:DATA?	Return all CALC1 results triggered by INITiate.			√
:LATest?	Return last (latest) reading.			
:CALCulate2	Path to configure and control limit testing (CALC2):		8	√
:FEED <name>	Select input path for limit testing; CALCulate[1] or SENSe[1].	SENS		√
:FEED?	Query input path for limit tests.			√
:LIMit[1]	Limit 1 Testing:			√
:UPPer	Configure upper limit:			√
[:DATA] <n>	Set limit; -9.99999e20 to 9.99999e20.	1.0		√
[:DATA]?	Query upper limit.			√
:LOWer	Configure lower limit:			√
[:DATA] <n>	Set limit; -9.99999e20 to 9.99999e20.	-1.0		√
[:DATA]?	Query lower limit.			√
:STATe <b>	Enable or disable limit 1 test.	OFF		√
:STATe?	Query state of limit 1 test.			√
:FAIL?	Return result of limit 1 test; 0 (pass) or 1 (fail).			√
:LIMit2	Limit 2 Testing:			√
:UPPer	Configure upper limit:			√
[:DATA] <n>	Set limit; -9.99999e20 to 9.99999e20.	1.0		√
[:DATA]?	Query upper limit.			√
:LOWer	Configure lower limit:			√
[:DATA] <n>	Set limit; -9.99999e20 to 9.99999e20.	-1.0		√
[:DATA]?	Query lower limit.			√
:STATe <b>	Enable or disable limit 2 test.	OFF		√
:STATe?	Query state of limit 2 test.			√
:FAIL?	Return result of limit 2 test; 0 (pass) or 1 (fail).			√
:NULL	Configure and control Rel:			√
:ACQuire	Use input signal as Rel value.			
:OFFSet <NRf>	Specify Rel value; -9.999999e20 to 9.999999e20.	0.0		√
:OFFSet?	Query Rel value.			√
:STATe <b>	Enable or disable Rel.	OFF		√
:STATe?	Query state of Rel.			√
:DATA?	Return all CALC2 readings triggered by INITiate.			√
:LATest?	Return only the last (latest) reading.			

Table 14-1 (continued)
CALCulate command summary

Command	Description	Default parameter	Ref Section	SCPI
:CALCulate3	Path to configure and control CALC3 calculations on buffer data:		5	√
:FORMat <name>	Select buffer statistic; MEAN, SDEViation, Maximum, MINimum or PKPK.	MEAN		√
:FORMat?	Query selected statistic.			√
:DATA?	Read the selected buffer statistic.			√

Table 14-2
DISPlay command summary

Command	Description	Default parameter	Ref Section	SCPI
:DISPlay			13	
:DIGits <n>	Set display resolution; 4 to 7.	6	4	
:DIGits?	Query display resolution.			
:ENABle <b>	Turn front panel display on or off.	(Note 1)		√
:ENABle?	Query display state.			√
[:WINDow[1]]	Path to control user text messages:			√
:TEXT		(Note 2)		√
[:DATA] <a>	Define ASCII message “a” (up to 12 characters).			√
[:DATA]?	Read text message.			√
:STATe <b>	Enable or disable text message mode.	(Note 3)		√
:STATe?	Query state of text message mode.			√

Notes:
1. *RST and SYSTem:PRESet have no effect on the display circuitry. Pressing LOCAL or cycling power enables (ON) the display circuit.
2. *RST and SYSTem:PRESet have no effect on a user-defined message. Pressing LOCAL or cycling power cancels all user-defined messages.
3. *RST and SYSTem:PRESet have no effect on the state of the message mode. Pressing LOCAL or cycling power disables (OFF) the message mode.

Table 14-3
FORMat command summary

Command	Description	Default parameter	Ref Section	SCPI
:FORMat			13	
[:DATA] <type>[,<length>]	Specify data format; ASCii, REAL, 32, or SREal.	ASC		√
[:DATA]?	Query data format.			√
:ELEMents <item list>	Specify data elements; READing, UNITs, TIME, and STATus.	All 4		
:ELEMents?	Query data format elements.			
:BORDer <name>	Specify byte order; NORMal or SWAPped.	(see Note)		√
:BORDer?	Query byte order.			√
:SREGister <name>	Select data format for reading status registers; ASCii, HEXadecimal, OCTal, or BINary.	ASC	13	
:SREGister?	Query format for reading event registers.			

Note: *RST default is NORMal. SYSTem:PRESet default is SWAPped.

Table 14-4
SENSe command summary

Command	Description	Default parameter	Ref. Section	SCPI
[:SENSe[1]]				
[:FUNCtion][:<name>]	Select measure function: <name> = 'CURRent[:DC]'	'CURR'		
:DATA	Path to return instrument readings:		3	√
[:LATest]?	Return the last instrument reading.			√
[:CURRent[:DC]]	Path to configure amps function:			√
:NPLCycles <NRf>	Set integration rate in line cycles (PLC); 0.01 to 6.0 (60 Hz) or 5.0 (50Hz).	6 (60Hz) 5 (50Hz)	4	√
:NPLCycles?	Query NPLC.			√
:RANGe	Configure measurement range:		4	√
[:UPPer] <NRf>	Select range; -0.021 to 0.021 (amps).	2.1e-4		√
[:UPPer]?	Query range value.			√
:AUTO <b>	Enable or disable autorange.	(see Note)		√

Note: *RST default is ON and SYSTem:PRESet default is OFF.

Table 14-4 (continued)
SENSe command summary

Command	Description	Default parameter	Ref. Section	SCPI
:AUTO?	Query state of autorange.			√
:ULIMit <NRf>	Select autorange upper limit; -0.021 to 0.021 (amps).	2.1e-2		
:ULIMit?	Query upper limit for autorange.			
:LLIMit <NRf>	Select autorange lower limit; -0.021 to 0.021 (amps).	2.1e-9		
:LLIMit?	Query lower limit for autorange.			
:AVERage	Path to control the Digital Filter:		4	
:TCONtrol <name>	Select filter control; MOVing or REPeat.	MOV		
:TCONtrol?	Query filter control.			
:COUNt <n>	Specify filter count; 2 to 100.	10		
:COUNt?	Query filter count.			
:ADVanced	Advanced filter:			
:NTOLerance <n>	Specify noise tolerance (in %); 0 to 105.	0		
:NTOLerance?	Query noise tolerance.			
[:STATe] <b>	Enable or disable advanced filter.	OFF		
[:STATe]?	Query state of advanced filter.			
[:STATe] <b>	Enable or disable digital filter.	OFF		
[:STATe]?	Query state of digital filter.			
:MEDian	Path to control median filter:		4	
:RANK <NRf>	Specify “n” for rank; 1 to 5 (rank = 2n+1).	1		
:RANK?	Query rank.			
[:STATe] <b>	Enable or disable median filter.	OFF		
[:STATe]?	Query state of median filter.			

Note: *RST default is ON and SYSTem:PRESet default is OFF.

Table 14-5
STATus command summary

Command	Description	Default parameter	Ref Section	SCPI
:STATus		(Note 1)	10	√
:MEASurement	Measurement event registers:			
[:EVENt]?	Read the event register.	(Note 2)		
:ENABle <NDN> or <NRf>	Program the enable register.	(Note 3)		

Table 14-5 (continued)
STATus command summary

Command	Description	Default parameter	Ref Section	SCPI
:ENABle?	Read the enable register.			
:CONDition?	Read the condition register.			
:OPERation	Operation event registers:			√
[:EVENt]?	Read the event register.	(Note 2)		√
:ENABle <NDN> or <NRf>	Program the enable register.	(Note 3)		√
:ENABle?	Read the enable register.			√
:CONDition?	Read the condition register.			√
:QUEStionable	Questionable event registers:			√
[:EVENt]?	Read the event register.	(Note 2)		√
:ENABle <NDN> or <NRf>	Program the enable register.	(Note 3)		√
:ENABle?	Read the enable register.			√
:CONDition?	Read the condition register.			√
:PRESet	Return status registers to default states.			√
:QUEue	Read error queue:			√
[:NEXT]?	Read and clear oldest error/status (code and message).	(Note 4)		√
:ENABle <list>	Specify error and status messages for error queue.	(Note 5)		√
:ENABle?	Read the enabled messages.			√
:DISable <list>	Specify messages not to be placed in queue.	(Note 5)		
:DISable?	Read the disabled messages.			
:CLEar	Clear messages from error queue.			

Parameters:

<NDN>	=	#Bxx…x	Binary format (each x = 1 or 0)
	=	#Hx	Hexadecimal format (x = 0 to FFFF)
	=	#Qx	Octal format (x = 0 to 177777)
<NRf>	=	0 to 65535	Decimal format
<list>	=	(100:200, -224)	Example of a range and single entry (+100 through +200 and -224)

Notes:
1. Commands in this subsystem are not affected by *RST or SYSTem:PRESet. The effects of cycling power, *CLS and STATus:PRESet are explained by the following notes.
2. Event registers — Power-up and *CLS clears all bits. STATus:PRESet has no effect.
3. Enable registers — Power-up and STATus:PRESet clears all bits. *CLS has no effect.
4. Error queue — Power-up and *CLS empties the error queue. STATus:PRESet has no effect.
5. Error queue messages — Power-up enables error messages and disables status messages. *CLS and STATus:PRESet have no effect.

Table 14-6
SYSTem command summary (see Section 13 for detailed information)

Command	Description	Default parameter	Ref Section	SCPI
:SYSTem			13	
:ZCHeck	Zero check:		2	
[:STATe] <b>	Enable or disable zero check.	ON		
[:STATe]?	Query state of zero check.			
:ZCORrect	Zero correct:		2	
[:STATe] <b>	Enable or disable zero correct.	OFF		
[:STATe]?	Query state of zero correct.			
:ACQuire	Acquire a new zero correct value.			
:PRESet	Return to SYSTem:PRESet defaults.			√
:LFRequency <freq>	Select power line frequency; 50 or 60 (Hz).	60	1	
:LFRequency?	Query frequency setting.			
:AUTO	Path to control auto frequency.			
:SYSTem: :LFRequency :AUTO (continued)				
[:STATe] <b>	Enable or disable auto frequency.	ON		
[:STATe]?	Query state of auto frequency.			
:AZERo	Path to control autozero:		2	√
[:STATe] <b>	Enable or disable autozero.	ON		√
[:STATe]?	Query state of autozero.			√
:TIME	Timestamp:			
:RESet	Reset timestamp to 0 seconds.			
:POSetup <name>	Select power-on setup; RST, PRESet, or SAVx (where x = 0 – 2).	PRES		
:POSetup?	Query power-on setup.			
:VERSion?	Query SCPI revision level.			√
:ERRor	Read error queue:	(see Note)	10	√
[:NEXT]?	Read and clear oldest error/status (code and message).			
:ALL?	Read and clear all errors/status (code and message).			
:COUNt?	Read the number of messages in queue.			
:CODE	Code numbers only:			
[:NEXT]?	Read and clear oldest error/status (code only).			
:ALL?	Read and clear all errors/status (codes only).			

Table 14-6 (continued)
SYSTem command summary (see Section 13 for detailed information)

Command	Description	Default parameter	Ref Section	SCPI
:CLEar	Clear messages from error queue.		10	
:KEY <NRf>	Simulate key-press; see Figure 13-3.			√
:KEY?	Query the last "pressed" key.			√
	RS-232 interface:		9	
:LOCal	While in LLO, removes the LLO and places the Model 6485 in local (RS-232 only).			
:REMote	Places the Model 6485 in remote if not in LLO (RS-232 only).			
:RWLock	Places the Model 6485 in local lockout (RS-232 only).			

Note: Clearing the error queue - Power-up and *CLS clears the error queue. *RST, SYSTem:PRESet, and STATus:PRESet have no effect on the error queue.

Table 14-7
TRACe command summary

Command	Description	Default parameter	Ref Section	SCPI
:TRACel:DATA	Use :TRACe or :DATA as root command.	(see Note)	6	√
:DATA?	Read the contents of the buffer (data store).			√
:CLEar	Clear readings from buffer.			
:FREE?	Query bytes available and bytes in use.			√
:POINts <n>	Specify size of buffer; 1 to 2500.	100		√
:ACTual?	Query number of readings stored in buffer.			
:POINts?	Query buffer size.			√
:FEED <name>	Select source of readings for buffer; SENSe[1], CALCulate[1], or CALCulate2.	SENS1		√
:CONTrol <name>	Select buffer control mode; NEXT or NEVer.	NEV		√
:CONTrol?	Query buffer control mode.			√
:FEED?	Query source of readings for buffer.			√
:TSTamp	Timestamp:			
:FORMat <name>	Select timestamp format; ABSolute or DELta.	ABS		
:FORMat?	Query timestamp format.			

Note: SYSTem:PRESet and *RST have no effect on the commands in this subsystem. The listed defaults are power-on defaults.

Table 14-8
TRIGger command summary

Command	Description	Default parameter	Ref Section	SCPI
:INITiate	Path to initiate measurement cycle(s):		7	√
[:IMMediate]	Initiate one trigger cycle.			√
:ABORt	Reset trigger system (goes to idle state).			√
:ARM[:SEQuence[1]]	Path to configure arm layer:			√
[:LAYer[1]]				
:SOURce <name>	Select control source; IMMediate, TIMer, BUS, TLINk, or MANual.	IMMediate		√
:SOURce?	Query arm control source.			√
:COUNt <n>	Set measure count; 1 to 2500, or INF (infinite).	1		√
:COUNt?	Query measure count.			√
:TIMer <n>	Set timer interval; 0.001 to 99999.999 (sec).	0.100		√
:TIMer?	Query timer interval.			√
[:TCONfigure]				√
:DIRection <name>	Enable (SOURce) or disable (ACCeptor) bypass.	ACCeptor		√
:DIRection?	Query arm source bypass.			√
[:ASYNchronous]	Configure input/output triggers:			
:ILINe <NRf>	Select input trigger line; 1, 2, 3, 4, 5, or 6.	1		
:ILINe?	Query input trigger line.			
:OLINe <NRf>	Select output trigger line; 1, 2, 3, 4, 5, or 6.	2		
:OLINe?	Query output trigger line.			
:OUTPut <name>	Output trigger (TRIGger) or not at all (NONE).	NONE		
:OUTPut?	Query output trigger status.			
:TRIGger	Trigger layer:			√
:CLEar	Clear pending input trigger immediately.			
[:SEQuence[1]]	Trigger path.			
:SOURce <name>	Select control source; IMMediate or TLINk.	IMMediate		√
:SOURce?	Query trigger control source.			√
:COUNt <n>	Set measure count; 1 to 2500, or INF (infinite).	1		√
:COUNt?	Query measure count.			√
:DELay <n>	Set trigger delay; 0 to 999.9999 (sec).	0.0		√
:AUTO <b>	Enable or disable auto delay.	OFF		√
:AUTO?	Query state of auto delay.			√
:DELay?	Query delay value.			√
[:TCONfigure]				√

Table 14-8 (continued)
TRIGger command summary

Command	Description	Default parameter	Ref Section	SCPI
:DIRection <name>	Enable (SOURce) or disable (ACCeptor) bypass.	ACCeptor		√
:DIRection?	Query trigger source bypass.			√
[:ASYNchronous]	Configure input/output triggers:			
:ILINe <NRf>	Select input trigger line; 1, 2, 3, 4, 5, or 6.	1		
:ILINe?	Query input trigger line.			
:OLINe <NRf>	Select output trigger line; 1, 2, 3, 4, 5, or 6.	2		
:OLINe?	Query output trigger line.			
:OUTPut <name>	Output trigger after measurement (SENSe) or not at all (NONE).	NONE		
:OUTPut?	Query output trigger status.			

15
Performance Verification

- **Verification test requirements** — Summarizes environmental conditions, warm-up period, and line power requirements.
- **Recommended test equipment** — Lists all equipment necessary for verification and gives pertinent specifications.
- **Verification limits** — Describes how reading limits are calculated and gives an example.
- **Calibrator voltage calculations** — Details the method for calculating calibrator voltages when testing the 2nA to 2µA ranges.
- **Performing the verification test procedures** — Summarizes test considerations and describes how to restore factory defaults.
- **Offset voltage calibration** — Lists steps necessary to null voltage offset before performing verification.
- **Current measurement accuracy** — Lists detailed steps for verifying measurement accuracy of all current ranges. The 2nA to 2µA and 20µA to 20mA ranges are covered separately because of the different test equipment required.

Introduction

Use the procedures in this section to verify that Model 6485 accuracy is within the limits stated in the instrument's one-year accuracy specifications. You can perform these verification procedures:

- When you first receive the instrument to make sure that it was not damaged during shipment.
- To verify that the unit meets factory specifications.
- To determine if calibration is required.
- Follow calibration to make sure it was performed properly.

WARNING **The information in this section is intended only for qualified service personnel. Do not attempt these procedures unless you are qualified to do so. Some of these procedures may expose you to hazardous voltages, which could cause personal injury or death if contacted. Use standard safety precautions when working with hazardous voltages.**

NOTE *If the instrument is still under warranty, and its performance is outside specified limits, contact your Keithley representative or the factory to determine the correct course of action.*

Verification test requirements

Be sure that you perform the verification tests:

- Under the proper environmental conditions.
- After the specified warm-up period.
- Using the correct line voltage.
- Using the proper test equipment.
- Using the specified test signals and reading limits.

Environmental conditions

Conduct your performance verification procedures in a test environment with:

- An ambient temperature of 65˚ to 82˚F (18˚ to 28˚C).
- A relative humidity of less than 70% unless otherwise noted.

Warm-up period

Allow the Model 6485 to warm up for at least one hour before conducting the verification procedures. If the instrument has been subjected to temperature extremes (those outside the ranges stated above), allow additional time for the instrument's internal temperature to stabilize. Typically, allow one extra hour to stabilize a unit that is 18˚F (10˚C) outside the specified temperature range.

Allow the test equipment to warm up for the minimum time specified by the manufacturer.

Line power

The Model 6485 requires a line voltage of 100/120V or 220/240V at a line frequency of 50 to 60Hz. Verification tests must be performed within this range. Be sure the line voltage setting agrees with the expected line voltage (Section 17).

Recommended test equipment

Table 15-1 summarizes recommended verification equipment. You can use alternate equipment, but keep in mind that test equipment accuracy will add to the uncertainty of each measurement. Generally, the test equipment should have accuracy or uncertainty at least four times better than corresponding Model 6485 specifications. Note, however, that the recommended calibrator listed in Table 15-1 does not meet this requirement for 20µA output.

Table 15-1
Recommended performance verification equipment

Description	Manufacturer/Model	Specifications
Calibrator	Fluke 5700A	DC Voltage:[1] 2V: 7ppm 20V: 5ppm 200V: 7ppm DC Current:[1] 20µA: 550ppm 200µA: 100ppm 2mA: 55ppm 20mA: 55ppm
Electrometer Calibration Standard	Keithley Model 5156	Nominal Resistance:[2] 100MΩ: 200ppm 1GΩ: 300ppm
Low-noise coax cable BNC-to-triax adapter BNC shielding cap BNC-to-double banana plug adapter	Keithley 4801 Keithley 237-BNC-TRX Keithley CAP-18 Pomona 1269	

[1] 90-day, 23°±5°C full-range accuracy specifications shown. Uncertainty for 20µA output current does not meet the recommended four-times better uncertainty specification.
[2] 23°±3°C accuracy of characterization.

Verification limits

The verification limits stated in this section have been calculated using only Model 6485 one-year accuracy specifications, and *they do **not** include test equipment uncertainty.* If a particular measurement falls outside the allowable range, recalculate new limits based on both Model 6485 specifications and corresponding test equipment specifications.

Example reading limits calculation

As an example of how verification limits are calculated, assume you are testing the 20mA range using a 20mA input value. Using the Model 6485 20mA range accuracy specification of ±(0.1% of reading + 1µA), the calculated reading limits are:

Reading limits = 20mA ± [(20mA × 0.1%) + 1µA]
= 20mA ± (0.02mA + 0.001mA)
= 20mA ± 0.021mA
= 19.979mA to 20.021mA

Calibrator voltage calculations

When verifying the 2nA-2µA current ranges, you must calculate the actual calibrator voltages from the desired current values and the characterized Model 5156 Calibration Standard resistor values.

Calibrator voltages required for verification currents are calculated as follows:

$$V = IR$$

Where: V = required calibrator voltage
I = verification current
R = actual standard resistor value

For example, assume you are testing the 20nA range using an actual 100.5MΩ standard resistor value. The actual calibrator voltage is: 20nA × 100.5MΩ = 2.01V.

Performing the verification test procedures

Test considerations

When performing the verification procedures:

- Be sure to restore Model 6485 factory front panel defaults, and perform voltage offset calibration as outlined below.
- Make sure that the test equipment is properly warmed up and properly connected to the Model 6485 INPUT jack.
- Be sure the test equipment is set up for the proper function and range.
- Allow the input signal to settle before making a measurement.
- Do not connect test equipment to the Model 6485 through a scanner, multiplexer, or other switching equipment.

WARNING **The maximum safe voltage between picoammeter LO and chassis ground (common mode voltage) is 42V. The Model 6485 does not internally limit the LO to chassis voltage. Exceeding 42V can create a shock hazard. The LO to chassis breakdown voltage is 500V. Exceeding this voltage may cause damage to the instrument.**

CAUTION **Maximum continuous input voltage is 220V DC. Exceeding this value may cause instrument damage.**

Restoring factory defaults

Before performing the verification procedure, restore the instrument to its factory front panel defaults as follows:

1. Press SETUP. The instrument will display the following prompt:
   RESTORE: FACT
2. Using either RANGE key, select FACT, then restore the factory default conditions by pressing ENTER.

NOTE *You can use either RANGE key to select among FACT, GPIB, and USR0 to USR2 setups. Be sure you use FACT defaults for the verification procedure.*

Offset voltage calibration

Before performing the performance verification procedure, perform offset voltage calibration as outlined below.

1. Press the MENU key, select CAL, then press ENTER.
2. The unit will display the following:
   CAL: VOFFSET
3. Press ENTER. The instrument will prompt as follows:
   INPUT CAP
4. Connect the BNC shielding cap to the INPUT jack.
5. Press ENTER to complete offset voltage calibration.
6. Press EXIT to return to normal display.

Current measurement accuracy

Follow the steps below to verify that Model 6485 current measurement accuracy is within specified limits. The test involves applying accurate DC currents and then verifying that the Model 6485 current readings are within required limits.

20µA-20mA range accuracy

1. Connect the current calibrator to the Model 6485 INPUT jack, as shown in Figure 15-1. Use the appropriate low-noise coaxial cable, and BNC-to-dual banana plug adapter where shown.
2. Set the Model 6485 to the 20µA range using the up or down RANGE key.
3. With zero check enabled, zero correct the Model 6485, then disable zero check.
4. Set the calibrator current to 0.0000µA and make sure the output is turned on.
5. Enable the Model 6485 REL mode. Leave REL enabled for the remainder of the test.
6. Verify current measurement accuracy for each of the currents listed in Table 15-2. For each test point:
   - Select the correct Model 6485 measurement range.
   - Set the calibrator current to the indicated value.
   - Verify that the Model 6485 current reading is within the limits given in the table.
7. Repeat the procedure for negative source currents with the same magnitudes as those listed in Table 15-2.

Table 15-2
Reading limits for 20µA to 20mA ranges

Model 6485 Range	Calibrator Current	Model 6485 Current Reading Limits (1 Year, 18˚C-28˚C)
20µA	20.0000µA	19.9790 to 20.0210µA
200µA	200.000µA	199.790 to 200.210µA
2mA	2.00000mA	1.99790 to 2.00210mA
20mA	20.0000mA	19.9790 to 20.0210mA

Figure 15-1
Connections for 20µA to 20mA range verification

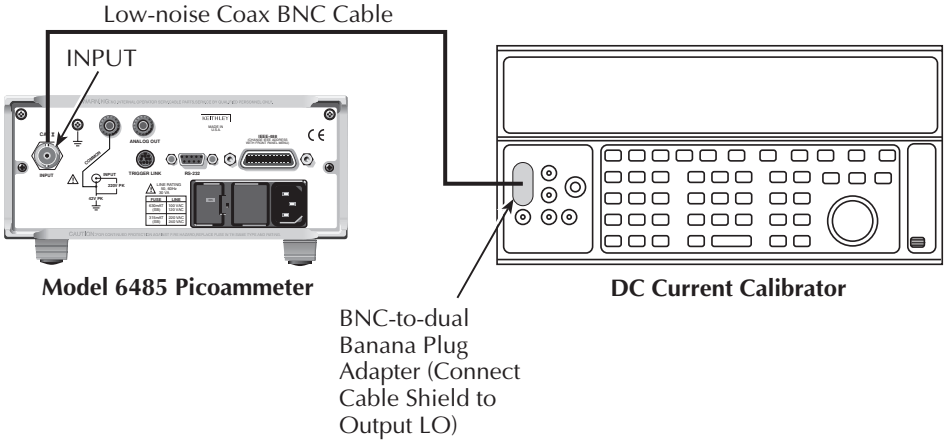

2nA-2µA range accuracy

1. Connect the voltage calibrator and Model 5156 Electrometer Calibration Standard to the Model 6485 INPUT jack, as shown in Figure 15-2. Initially, make connections to the 1GΩ resistor in the calibration standard.
2. Set the Model 6485 to the 2nA range.
3. With zero check enabled, zero correct the instrument then disable zero check.
4. Set the calibrator voltage to 0.0000V and make sure the output is turned on.
5. Enable the Model 6485 REL mode. Leave REL enabled for the remainder of the test.

6. Verify current measurement accuracy for each of the currents listed in Table 15-3. For each test point:
   - Make connections to the indicated calibration standard resistor.
   - Select the correct Model 6485 measurement range.
   - Calculate the actual required calibrator voltage: V = IR, where I is the desired applied current, and R is the actual standard resistor value.
   - Set the calibrator to the calculated voltage.
   - Verify that the Model 6485 current reading is within the reading limits listed in the table.
7. Repeat the procedure for negative source currents with the same magnitudes as those listed in Table 15-3.

Table 15-3
Reading limits for 2nA to 2µA ranges

Model 6485 Range	Nominal Calibrator Voltage	Calibration Standard Resistor[1]	Nominal Applied Current	Actual Voltage[2]	Model 6485 Current Reading Limits (1 Year, 18˚C-28˚C)
2nA	2V	1GΩ	2.00000nA	_____V	1.99160 to 2.00840nA
20nA	2V	100MΩ	20.0000nA	_____V	19.9190 to 20.0810nA
200nA	20V	100MΩ	200.000nA	_____V	199.590 to 200.410nA
2µA	200V	100MΩ	2.00000µA	_____V	1.99690 to 2.00310µA

[1] Nominal resistance values shown. Use actual characterized value for calculations.
[2] Calculate actual calibrator voltage as follows: V = IR, where I is desired applied current, and R is actual standard resistance value.

Figure 15-2
Connections for 2nA to 2μA range verification

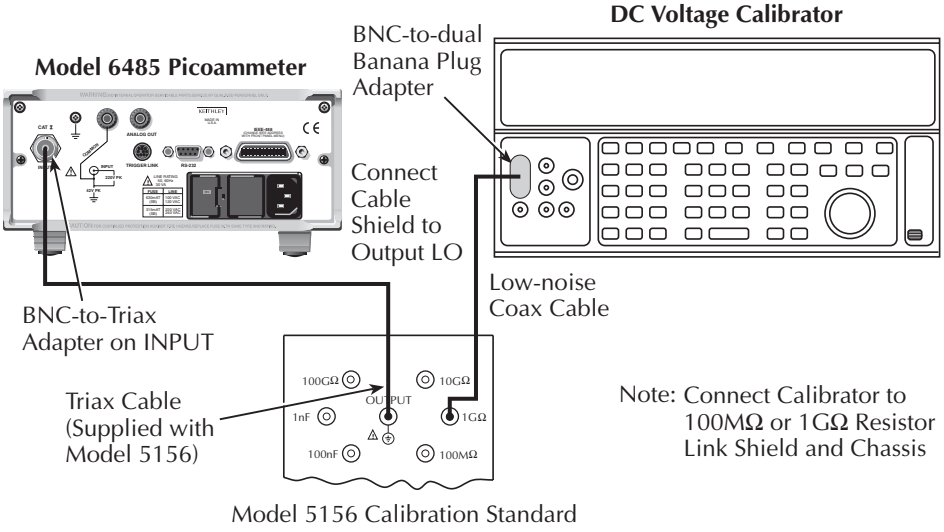

16
Calibration

- **Environmental conditions** — Summarizes temperature and relative humidity, warm-up period, and line power requirements.
- **Calibration considerations** — Lists considerations to take into account when calibrating the unit.
- **Calibration cycle** — States how often the Model 6485 should be calibrated.
- **Recommended calibration equipment** — Lists all equipment necessary for calibration and gives pertinent specifications.
- **Calibration errors** — Discusses error messages that might occur during calibration.
- **Calibration menu** — Discusses error messages that might occur during calibration.
- **Aborting calibration** — Describes how to halt the calibration procedure at any time.
- **Current calculations** — Details how to calculate currents from calibrator voltages and standard resistor values when calibrating the 2nA to 2µA ranges.
- **Calibration procedure** — Provides step-by-step procedures for calibrating all current ranges. The 2nA to 2µA and 20µA to 20mA ranges require separate procedures because of the different calibration equipment involved.
- **Calibration support** — Describes how to change the calibration code, reset the calibration code, and view calibration dates and count.

Introduction

Use the procedures in this section to calibrate the Model 6485 from the front panel. (See Appendix H for information on remote calibration.) These procedures require accurate test equipment to source precise DC voltages, currents, and resistances.

WARNING **The information in this section is intended only for qualified service personnel. Do not attempt these procedures unless you are qualified to do so. Some of these procedures may expose you to hazardous voltages.**

Environmental conditions

Temperature and relative humidity

Conduct the calibration procedures at an ambient temperature of 22˚ to 24˚C with relative humidity of less than 70% unless otherwise noted.

Warm-up period

Allow the Model 6485 to warm up for at least one hour before performing calibration.

If the instrument has been subjected to temperature extremes (those outside the ranges stated above), allow additional time for the instrument's internal temperature to stabilize. Typically, allow one extra hour to stabilize a unit that is 10˚C outside the specified temperature range.

Allow the test equipment to warm up for the minimum time specified by the manufacturer.

Line power

The Model 6485 requires a line voltage of 100/120V or 220/240V at a line frequency of 50 to 60Hz. The instrument must be calibrated while operating from a line voltage within this range. Be sure the line voltage setting agrees with the expected line voltage (Section 17).

Calibration considerations

When performing the calibration procedures:

- Make sure that the test equipment is properly warmed up and connected to the Model 6485 INPUT jack.
- Always allow the source signal to settle before calibrating each point.
- Do not connect test equipment to the Model 6485 through a scanner or other switching equipment.
- If an error occurs during calibration the Model 6485 will generate an appropriate error message.

WARNING **The maximum safe voltage between picoammeter LO and chassis ground (common mode voltage) is 42V. The Model 6485 does not internally limit the LO to chassis voltage. Exceeding 42V can create a shock hazard. The LO to chassis breakdown voltage is 500V. Exceeding this voltage may cause damage to the instrument.**

CAUTION **Maximum continuous input voltage is 220V DC. Exceeding this value may cause instrument damage.**

Calibration cycle

Perform verification at least once a year to ensure the unit meets or exceeds its specifications. Calibrate if necessary.

Recommended calibration equipment

Table 16-1 lists the recommended equipment for the calibration procedures. You can use alternate equipment, but keep in mind that test equipment uncertainty will affect calibration accuracy. Calibration equipment should have accuracy specifications at least four times better than corresponding Model 6485 specifications. Note, however, that the recommended calibrator listed in Table 16-1 does not meet this requirement for 20µA output.

Table 16-1
Recommended calibration equipment

Description	Manufacturer/Model	Specifications
Calibrator	Fluke 5700A	DC Voltage:[1] 2V: 7ppm 20V: 5ppm 200V: 7ppm DC Current:[1] 20µA: 550ppm 200µA: 100ppm 2mA: 55ppm 20mA: 55ppm
Electrometer Calibration Standard	Keithley Model 5156	Nominal Resistance:[2] 100MΩ: 200ppm 1GΩ: 300ppm
Low-noise coax cable BNC-to-triax adapter BNC shielding cap BNC-to-double banana plug adapter	Keithley 4801 Keithley 237-BNC-TRX Keithley CAP-18 Pomona 1269	

[1] 90-day, 23˚±5˚C full-range accuracy specifications shown. Includes ppm of range and offset. Uncertainty for 20µA output current does not meet the recommended four-times better uncertainty specification.
[2] 23˚±3˚C accuracy of characterization.

Calibration errors

The Model 6485 checks for errors after each calibration step, minimizing the possibility that improper calibration may occur due to operator error. If an error is detected during calibration, the instrument will display an appropriate error message. The unit will then prompt you to repeat the calibration step that caused the error.

Table 16-2
Test uncertainty ratios with recommended equipment

Range	5700 + 5156	Test uncertainty ratio
2nA	7ppm + 300ppm	13.0
20nA	7ppm + 200ppm	19.3
200nA	5ppm + 200ppm	9.8
2uA	7ppm + 200ppm	7.2
20uA	550ppm	1.8
200uA	100ppm	10.0
2mA	55ppm	18.2
20ma	55ppm	18.2

Calibration menu

You can access the calibration menu by pressing MENU, selecting CAL, and then pressing ENTER. The various selections are summarized in Table 16-3. Use the up and down RANGE keys to scroll through these selections.

Table 16-3
Calibration menu

Menu Item*	Description
VOFFSET	Performs offset voltage calibration.
COUNT	Displays calibration count.
RUN	Calibrates present range.
DATES	Displays calibration and due dates.
UNLOCK	Unlocks calibration using code.
LOCK	Locks cal, exits to the main menu.
SAVE	Saves calibration constants.

* Press MENU, select CAL, then press ENTER to access. Use up or down RANGE to scroll through selections.

Aborting calibration

You can abort the calibration procedure at any time by pressing the EXIT key.

Current calculations

When calibrating the 2nA-2µA current ranges, you must calculate the actual current values from the applied calibrator voltages and the characterized Model 5156 Calibration Standard resistor values. Calibration currents are calculated as follows:

$$I = V/R$$

Where: I = required calibration current
V = calibrator voltage
R = actual standard resistor value

For example, assume you are calibrating the 20nA range using a 2V calibrator voltage with an actual 100.5MΩ standard resistor value. The actual calibration current is: 2V/100.5MΩ = 19.9005nA.

Calibration procedure

The calibration procedure should be performed in the following order:

- Preparing for calibration
- Offset voltage calibration
- Current calibration
- Entering calibration dates and saving calibration
- Locking out calibration

Preparing for calibration

1. Turn on the Model 6485 and the calibrator, and allow them to warm up for at least one hour before performing calibration.
2. Press MENU, select CAL, then press ENTER. The instrument will display the following:
   CAL: VOFFSET
3. Use the up or down RANGE key to display the following:
   CAL: UNLOCK
4. Press ENTER. The instrument will prompt for the calibration code:
   CODE? 000000

5. Enter the current calibration code on the display. (Factory default: 006485.) Use the up and down RANGE keys to select the letter or number, and use the left and right arrow keys to choose the position. Press ENTER to complete the process, and the unit will display:
   CAL UNLOCKED
   Followed by:
   NEW CODE? N
6. With N displayed, press ENTER.

Offset voltage calibration

Before performing the remaining calibration steps, perform input bias current and offset voltage calibration as outlined below.

1. From the calibration menu, use the up or down RANGE key to display the following:
   CAL: VOFFSET
2. Press ENTER. The instrument will prompt as follows:
   INPUT CAP
3. Connect the BNC shielding cap to the rear panel INPUT jack.
4. Press ENTER to complete offset voltage calibration.
5. Press EXIT to return to normal display.

Current calibration

20µA-20mA range calibration

1. Connect the BNC shielding cap to the Model 6485 rear panel INPUT jack.
2. Select the Model 6485 20µA range.
3. Press MENU, select CAL, then press ENTER. At the CAL: RUN prompt, press ENTER. The unit will prompt for the zero calibration point:
   20µA ZERO
4. With the BNC shielding cap connected to the INPUT jack for a 0µA input current, press ENTER.
5. The unit will prompt for the positive full-scale cal point:
   +20µA CAL
6. Connect the current calibrator to the Model 6485 INPUT jack, as shown in Figure 16-1.
7. Press ENTER. The unit will prompt for the positive full-scale current:
   +20.00000 µA
8. Set the calibrator current to +20.00000µA then adjust the display to agree with the calibrator current.

9. Press ENTER. The unit will prompt for the negative full-scale calibration point:
   -20µA CAL
10. Press ENTER. The Model 6485 will prompt for the negative full-scale calibration current:
    -20.00000 µA
11. Set the calibrator output to –20.00000µA, then adjust the display to agree with the calibrator value. Press ENTER to complete calibration of the present range.
12. Press EXIT to return to normal display.
13. Repeat steps 1 through 12 for the 200µA through 20mA ranges using Table 16-4 as a guide.

Table 16-4
20µA to 20mA range calibration summary

Model 6485 Range	Calibrator Currents*
20µA	0µA +20.00000µA -20.00000µA
200µA	0µA +200.0000µA -200.0000µA
2mA	0mA +2.000000mA -2.000000mA
20mA	0mA +20.00000mA -20.00000mA

* Calibrate zero, positive full-scale, and negative full-scale for each range. BNC shielding cap used for zero calibration point for all ranges. See procedure.

Figure 16-1
Connections for 20µA to 20mA range calibration

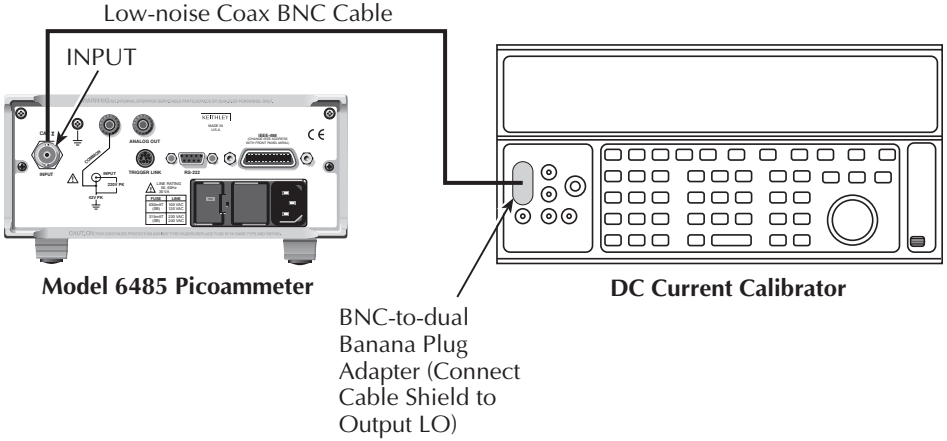

2nA-2µA range calibration

1. Connect the voltage calibrator and the Model 5156 Electrometer Calibration Standard to the Model 6485 INPUT jack, as shown in Figure 16-2. Initially, make connections to the 1GΩ resistance.
2. Set the calibrator to output volts, and make sure the calibrator output is turned on.
3. Select the Model 6485 2nA range.
4. Press MENU, select CAL, then press ENTER. At the CAL: RUN prompt, press ENTER again. The unit will prompt for the zero calibration point:
   2NA ZERO
5. Set the calibrator voltage to 0V then press ENTER.
6. The instrument will prompt for the positive full-scale calibration point:
   +2NA CAL
7. Press ENTER. The instrument will prompt for the positive full-scale calibration current:
   +2.000000 NA
8. Set the calibrator voltage to +2.000000V. Calculate the actual calibration current from the calibrator voltage and the actual standard resistor value: I = V/R. Adjust the Model 6485 display to agree with the calculated current, then press ENTER.
9. The Model 6485 will prompt for the negative full-scale calibration point:
   -2NA CAL
10. Press ENTER. The instrument will prompt for the negative full-scale current:
    -2.000000 NA

11. Set the calibrator output voltage to –2.000000V, then calculate the calibration current from the calibrator voltage and standard resistor value: I = V/R. Adjust the Model 6485 display to agree with the calculated current, then press ENTER to complete calibration of the present range.
12. Press EXIT to return to normal display.
13. Repeat steps 3 through 12 for the 20nA through 2µA ranges using Table 16-5 as a guide. Be sure to make connections to the correct standard resistor and set the calibrator voltages to the correct values.

Table 16-5
2nA to 2µA range calibration summary

Model 6485 Range	Calibrator Voltages	Standard Resistors[1]	Calibration Currents[2]
2nA	0V +2.000000V -2.000000V	1GΩ 1GΩ 1GΩ	0nA +2nA -2nA
20nA	0V +2.000000V -2.000000V	100MΩ 100MΩ 100MΩ	0nA +20nA -20nA
200nA	0V +20.00000V -20.00000V	100MΩ 100MΩ 100MΩ	0nA +200nA -200nA
2µA	0V +200.0000V -200.0000V	100MΩ 100MΩ 100MΩ	0µA +2µA -2µA

[1] Nominal resistance values.
[2] Nominal currents. Calculate actual currents from calibrator voltage and actual standard resistor value: I = V/R. Calibrate zero, positive full-scale, and negative full-scale for each range.

Figure 16-2
Connections for 2nA to 2μA range calibration

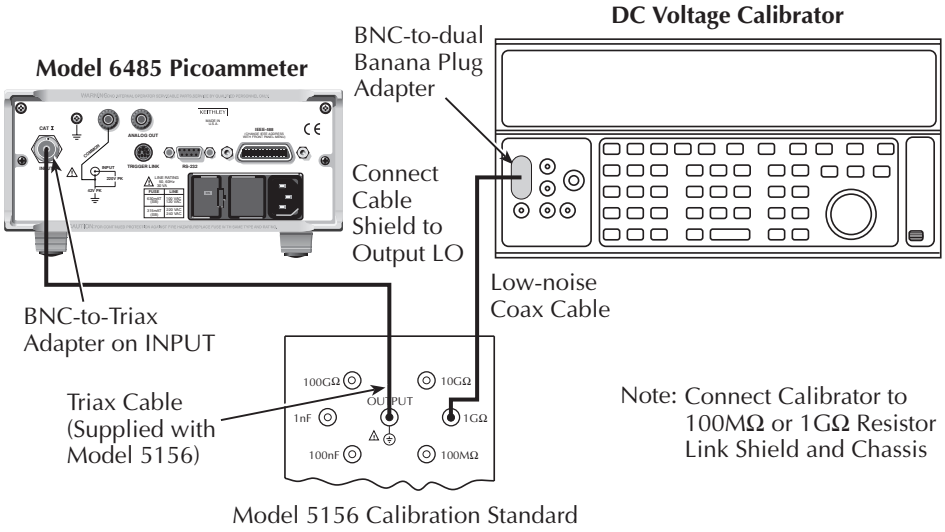

Entering calibration dates and saving calibration

NOTE *For temporary calibration without saving new calibration constants, proceed to* "Locking out calibration".

1. Press MENU, select CAL, then press ENTER to access the calibration menu.
2. Use either RANGE key to display the following:
   CAL: SAVE
3. Press ENTER. The unit will prompt for today's calibration date:
   DATE: 11/15/01
4. Use the arrow and RANGE keys to set the date, then press ENTER. The unit will then prompt for the calibration due date:
   NDUE: 11/15/02
5. Set the calibration due date as desired then press ENTER. The unit will prompt you as follows:
   SAVE CAL?YES
6. With the YES prompt displayed press ENTER to save and lock out calibration. The unit will display:
   CAL SAVED

NOTE *Calibration will also be locked out once saved.*

Locking out calibration

Use the following procedure to lock out calibration without saving new calibration constants:

1. Press MENU, select CAL, then press ENTER. Use the up RANGE key to display the following:
   CAL: LOCK
2. Press ENTER. The instrument will display the following message:
   CAL LOCKED.

Calibration support

Changing the calibration code

Follow the steps below to change the calibration code:

1. Press MENU, select CAL, then press ENTER. The instrument will display the following:
   CAL: VOFFSET
2. Use the up or down RANGE key to display the following:
   CAL: UNLOCK
3. Press ENTER. The instrument will prompt for the present calibration code:
   CODE? 000000
4. Enter the present calibration code on the display. (Factory default: 006485.) Use the up and down RANGE keys to select the letter or number, and use the left and right arrow keys to choose the position. Press ENTER to complete the process and the unit will display:
   CAL ENABLED
   Followed by:
   NEW CODE? Y/N
5. Select Y, then press ENTER. The unit will prompt for the new code:
   CODE? 000000
6. Enter the new code, then press ENTER.
7. Using the LOCK selection in the calibration menu, lock out calibration after changing the code.

Resetting the calibration code

If you forget the calibration code, you can unlock calibration by shorting together the CAL pads which are located on the display circuit board inside the unit. Doing so will also reset the code to the factory default (006485).

Displaying calibration dates

To display calibration dates at any time:

1. From normal display, press MENU, select CAL, then press ENTER. The unit will display the following:
   CAL: VOFFSET
2. Use either RANGE key to select CAL: DATES, then press ENTER. The Model 6485 will display the last calibration date, for example:
   DATE: 11/15/01
3. Press ENTER to view the calibration due date, for example:
   NDUE: 11/15/02
4. Press EXIT to return to normal display.

Displaying the calibration count

To display the calibration count at any time:

1. From normal display, press MENU, select CAL, then press ENTER. The unit will display the following:
   CAL: VOFFSET
2. Use either RANGE key to select CAL:COUNT from the calibration menu, then press ENTER. The unit displays the calibration count, for example:
   COUNT: 1
3. Press EXIT to return to normal display.

17
Routine Maintenance

- **Setting line voltage and replacing line fuse** — Describes how to set the line voltage properly and replace the line fuse with the correct rating.
- **Front panel tests** — Covers testing the front panel keys and the display.

Introduction

The information in this section deals with routine type maintenance that can be performed by the operator and includes procedures for setting the line voltage, replacing the line fuse, and running the front panel tests.

Setting line voltage and replacing line fuse

WARNING **Disconnect the line cord at the rear panel, and remove all test cables connected to the instrument before replacing the line fuse.**

The power line fuse is located in the power module next to the AC power receptacle (Figure 17-1). If the line voltage must be changed, or if the line fuse requires replacement, perform the following steps:

1. Place the tip of a flat-blade screwdriver into the power module by the fuse holder assembly (Figure 17-1). Gently push in and to the left. Release pressure on the assembly and its internal spring will push it out of the power module.
2. Remove the fuse and replace it with the type listed in Table 17-1.

CAUTION **For continued protection against fire or instrument damage, replace the fuse only with the type and rating listed. If the instrument repeatedly blows fuses, it will require servicing.**

3. If configuring the instrument for a different line voltage, remove the line voltage selector from the assembly, and rotate it to the proper position. When the selector is installed into the fuse holder assembly, the correct line voltage appears inverted in the window.
4. Install the fuse holder assembly into the power module by pushing it in until it locks in place.

Table 17-1
Line fuse ratings

Line Voltage	Rating	Keithley Part No.
100/120V	0.63A, 250V, 5 × 20mm, slow blow	FU-106-.630
220/240V	0.315A, 250V, 5 × 20mm, slow-blow	FU-106-.315

Figure 17-1
Line fuse location

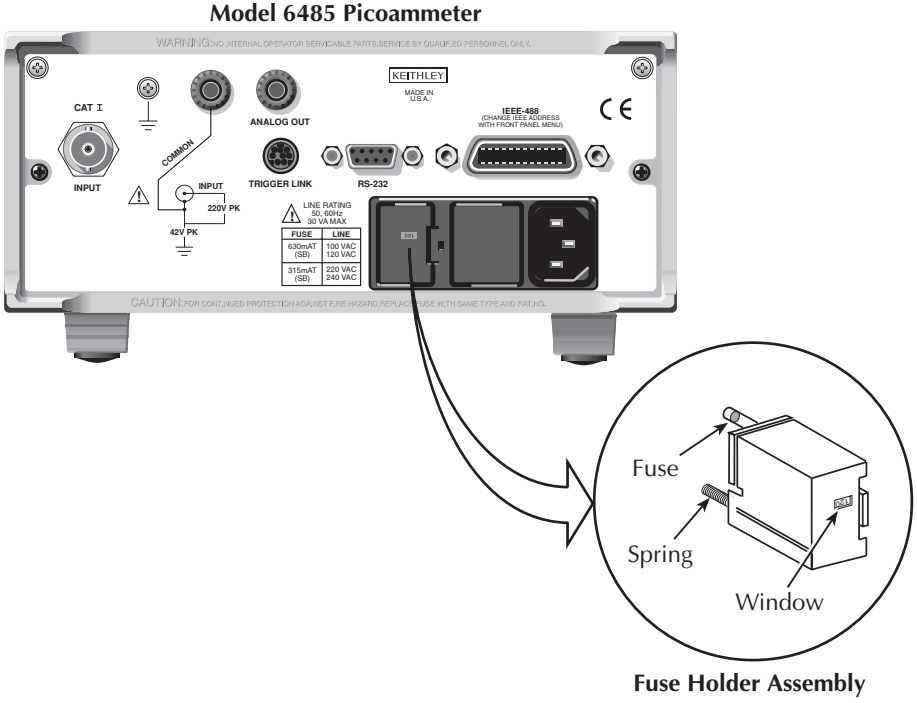

Front panel tests

The front panel tests are summarized in Table 17-2. To run a test, simply press the MENU key, select TEST, and press ENTER to access the test menu. Scroll through the menu choices with the RANGE keys, and press ENTER.

Table 17-2
Front panel tests

Test	Description
DISP	Test display
KEY	Test front panel keys

DISP test

The display test allows you to verify that each segment and annunciator in the vacuum fluorescent display is working properly. Perform the following steps to run the display test:

1. Press MENU, select TEST, and press ENTER to access the self-test options.
2. Use the up or down RANGE key to display TEST: DISP.
3. Press ENTER to start the test. There are four parts to the display test. Each time ENTER is pressed, the next part of the test sequence is selected. The four parts of the test sequence are as follows:
   - All annunciators are displayed.
   - The segments of each digit are sequentially displayed.
   - The 12 digits (and annunciators) are sequentially displayed.
   - The annunciators located at either end of the display are sequentially displayed.
4. When finished, abort the display test by pressing EXIT. The instrument returns to normal operation.

KEY test

The KEY test allows you to check the functionality of each front panel key. Perform the following steps to run the KEY test:

1. Press MENU, select TEST, and press ENTER to access the self-test options.
2. Use the up or down RANGE key to display TEST: KEY.
3. Press ENTER to start the test. When a key is pressed, the label name for that key is displayed to indicate that it is functioning properly. When the key is released, the message NO KEY PRESS is displayed.
4. Pressing EXIT tests the EXIT key. However, the second consecutive press of EXIT aborts the test and returns the instrument to normal operation.

A
Specifications

6485 Picoammeter Specifications

RANGE	5½ DIGIT DEFAULT RESOLUTION	ACCURACY (1YR) [1] ±(% RDG. + OFFSET) 18°–28°C, 0–70% RH	TYPICAL RMS NOISE [2]	ANALOG RISE TIME [3] (10% to 90%)
2 nA	10 fA	0.4 % + 400 fA	20 fA	8 ms
20 nA	100 fA	0.4 % + 1 pA	100 fA	8 ms
200 nA	1 pA	0.2 % + 10 pA	1 pA	500 µs
2 µA	10 pA	0.15% + 100 pA	10 pA	500 µs
20 µA	100 pA	0.1 % + 1 nA	100 pA	500 µs
200 µA	1 nA	0.1 % + 10 nA	1 nA	500 µs
2 mA	10 nA	0.1 % + 100 nA	10 nA	500 µs
20 mA	100 nA	0.1 % + 1 µA	100 nA	500 µs

TEMPERATURE COEFFICIENT: 0°–18°C & 28°–50°C. For each °C, add 0.1 ∞ (% rdg + offset) to accuracy spec.

INPUT VOLTAGE BURDEN: <200µV on all ranges except <1mV on 20mA range.

MAXIMUM INPUT CAPACITANCE: Stable to 10nF on all nA ranges and 2µA range; 1µF on 20µA and 200µA ranges, and on mA ranges.

MAXIMUM CONTINUOUS INPUT VOLTAGE: 220VDC

NMRR[1]: (50 or 60Hz) :60dB

MAXIMUM COMMON MODE VOLTAGE: 42V.

ISOLATION (Meter COMMON to chassis): Typically >5∞10^{11}Ω in parallel with <1nF.

ANALOG OUTPUT: Scaled voltage output (inverting 2V full scale on all ranges) 3% ±2mV, 1kΩ impedance.

[1] At 1 PLC – limited to 60 rdgs/sec under this condition.

[2] At 6 PLC, 1 standard deviation, 100 readings, filter off, capped input – limited to 10 rdgs/sec under this condition.

[3] Measured at analog output with resistive load >100kΩ.

IEEE-488 BUS IMPLEMENTATION

MULTILINE COMMANDS: DCL, LLO, SDC, GET, GTL, UNT, UNL, SPE, SPD.

IMPLEMENTATION: SCPI (IEEE-488.2, SCPI-1996.0); DDC (IEEE-488.1).

UNILINE COMMANDS: IFC, REN, EOI, SRQ, ATN.

INTERFACE FUNCTIONS: SH1, AH1, T5, TE0, L4, LE0, SR1, RL1, PP0, DC1, DT1, C0, E1.

PROGRAMMABLE PARAMETERS: Range, Zero Check, Zero Correct, EOI (DDC mode only), Trigger, Terminator (DDC mode only), Calibration (SCPI mode only), Display Format, SRQ, REL, Output Format, V-offset Cal.

ADDRESS MODES: TALK ONLY and ADDRESSABLE.

LANGUAGE EMULATION: Keithley Model 485 emulation via DDC mode.

RS-232 IMPLEMENTATION:
Supports: SCPI 1996.0.
Baud Rates: 300, 600, 1200, 2400, 4800, 9600, 19.2k, 38.4k, 57.6k.
Protocols: Xon/Xoff, 7 or 8 bit ASCII, parity-odd/even/none.
Connector: DB-9 TXD/RXD/GND.

GENERAL

INPUT CONNECTOR: BNC on rear panel.

DISPLAY: 12 character vacuum fluorescent.

RANGING: Automatic or manual.

OVERRANGE INDICATION: Display reads "OVRFLOW".

CONVERSION TIME: Selectable 0.01 PLC to 60 PLC (50PLC under 50Hz operation). (Adjustable from 200µs to 1s)

READING RATE:
To internal buffer 1000 readings/second[1]
To IEEE-488 bus 900 readings/second[1, 2]

Notes:
[1] 0.01 PLC, digital filters off, front panel off, auto zero off.
[2] Binary transfer mode. IEEE-488.1.

BUFFER: Stores up to 2500 readings.

PROGRAMS: Provide front panel access to IEEE address, choice of engineering units or scientific notation, and digital calibration.

EMC: Conforms with European Union Directive 89/336/EEC, EN61326-1.

SAFETY: Conforms with European Union Directive 73/23/EEC, EN61010-1.

TRIGGER LINE: Available, see manual for usage.

DIGITAL FILTER: Median and averaging (selectable from 2 to 100 readings).

ENVIRONMENT:
Operating: 0°–50°C; relative humidity 70% non-condensing, up to 35°C. Above 35°C, derate humidity by 3% for each °C.
Storage: –25° to +65°C.

WARM-UP: 1 hour to rated accuracy (see manual for recommended procedure).

POWER: 100–120V or 220–240V, 50–60Hz, 30VA.

PHYSICAL:
Case Dimensions: 90mm high × 214mm wide × 369mm deep (3½ in. × 8⅜ in. × 14⁹⁄₁₆ in.).
Working Dimensions: From front of case to rear including power cord and IEEE-488 connector: 394mm (15.5 inches).
Net Weight: <2.8 kg (<6.1 lbs).
Shipping Weight: <5 kg (<11 lbs).

B
Status and Error Messages

Table B-1
Status and error messages

Number	Description	Event
-440	Query unterminated after indefinite response	EE
-430	Query deadlocked	EE
-420	Query unterminated	EE
-410	Query interrupted	EE
-363	Input buffer overrun	EE
-362	Framing error in program message	EE
-361	Parity error in program message	EE
-360	Communications error	EE
-350	Queue overflow	SYS
-330	Self-test failed	EE
-314	Save/recall memory lost	EE
-315	Configuration memory lost	EE
-285	Program syntax error	EE
-284	Program currently running	EE
-282	Illegal program name	EE
-281	Cannot create program	EE
-260	Expression error	EE
-241	Hardware missing	EE
-230	Data corrupt or stale	EE
-225	Out of memory	EE
-224	Illegal parameter value	EE
-223	Too much data	EE
-222	Parameter data out of range	EE
-221	Settings conflict	EE
-220	Parameter error	EE
-215	Arm deadlock	EE
-214	Trigger deadlock	EE
-213	Init ignored	EE
-212	Arm ignored	EE
-211	Trigger ignored	EE
-210	Trigger error	EE
-202	Settings lost due to rtl	EE
-201	Invalid while in local	EE
-200	Execution error	EE
-178	Expression data not allowed	EE
-171	Invalid expression	EE
-170	Expression error	EE
-168	Block data not allowed	EE
-161	Invalid block data	EE
-160	Block data error	EE

Table B-1 (continued)
Status and error messages

Number	Description	Event
-158	String data not allowed	EE
-154	String too long	EE
-151	Invalid string data	EE
-150	String data error	EE
-148	Character data not allowed	EE
-144	Character data too long	EE
-141	Invalid character data	EE
-140	Character data error	EE
-128	Numeric data not allowed	EE
-124	Too many digits	EE
-123	Exponent too large	EE
-121	Invalid character in number	EE
-120	Numeric data error	EE
-114	Header suffix out of range	EE
-113	Undefined header	EE
-112	Program mnemonic too long	EE
-111	Header separator error	EE
-110	Command header error	EE
-109	Missing parameter	EE
-108	Parameter not allowed	EE
-105	GET not allowed	EE
-104	Data type error	EE
-103	Invalid separator	EE
-102	Syntax error	EE
-101	Invalid character	EE
-100	Command error	EE
+000	No error	SE
	Measurement events:	
+101	Low limit 1 failed	SE
+102	High limit 1 failed	SE
+103	Low limit 2 failed	SE
+104	High limit 2 failed	SE
+105	Active limit tests passed	SE
+106	Reading available	SE

Table B-1 (continued)
Status and error messages

Number	Description	Event
+107	Reading overflow	SE
+108	Buffer available	SE
+109	Buffer full	SE
+110	Input overvoltage	SE
	Standard events:	
+200	Operation complete	SE
	Operation events:	
+300	Device calibrating	SE
+303	Device sweeping	SE
+305	Waiting in trigger layer	SE
+306	Waiting in arm layer	SE
+310	Re-entering the idle layer	SE
	Questionable events:	
+408	Questionable calibration	SE
+414	Command warning	SE
	Calibration errors:	
+500	Date of calibration not set	EE
+501	Next date of calibration not set	EE
+502	Calibration data invalid	EE
+507	Measurement offset data invalid	EE
+508	Measurement gain data invalid	EE
+509	Not permitted with cal locked	EE
+510	Not permitted with cal un-locked	EE
+511	Voltage offset not converging	EE
+512	Current offset not converging	EE
	Lost data errors:	
+602	GPIB address lost	EE
+603	Power-on state lost	EE
+604	DC calibration data lost	EE
+605	Calibration dates lost	EE
+606	GPIB communication language lost	EE
	Communication errors:	
+700	Invalid system communication	EE
+701	ASCII only with RS-232	EE

Table B-1 (continued)
Status and error messages

Number	Description	Event
	Additional (more informative) command execution errors:	
+800	Illegal with storage active	EE
+801	Insufficient vector data	EE
+804	Expression list full	EE
+805	Undefined expression exists	EE
+806	Expression not found	EE
+807	Definition not allowed	EE
+808	Expression cannot be deleted	EE
+811	Not an operator or number	EE
+812	Mismatched parentheses	EE
+813	Not a number of data handle	EE
+814	Mismatched brackets	EE
+815	Too many parentheses	EE
+816	Entire expression not parsed	EE
+817	Unknown token	EE
+818	Error parsing mantissa	EE
+819	Error parsing exponent	EE
+820	Error parsing value	EE
+821	Invalid data handle index	EE
+830	Invalid with INFinite ARM:COUNT	EE
+831	Invalid with INFinite TRIG:COUNT	EE
+900	Internal system error	EE
	DDC Status Model:	
+950	Rdg overflow	SE
+951	Rdg ready	SE
+952	Buffer full	SE
+953	IDDC error	EE
+954	IDDCO error	EE
+955	Trig overrun	EE
+956	No remote	EE
+957	Number error	EE
+958	DDC ready	SE
+960	DDC Mode IDDC Error	EE
+961	DDC Mode IDDCO Error	EE

Table B-1 (continued)
Status and error messages

Number	Description	Event
	Keithley 6485 Serial Poll Byte Events:	
+962	DDC Ready	SE
+963	DDC Reading Done	SE
+965	DDC Buffer Full	SE
+966	DDC Reading overflow	SE

EE = error event
SE = status event
SYS = system error event
NOTE: Errors and status messages with a positive number are instrument-dependent. Negative errors are reserved by SCPI.

NOTE *SCPI-confirmed messages are described in Volume 2: Command Reference of the Standard Commands for Programmable Instruments. Refer to the :SYSTem:ERRor? command.*

C
General Measurement Considerations

Measurement considerations

The following measurement considerations apply to all precision measurements. Table 2-5 lists all measurement considerations, and indicates where to find detailed information on them.

For comprehensive information on all measurement considerations, refer to the Low Level Measurements handbook, which is available from Keithley.

Ground loops

Ground loops that occur in multiple-instrument test setups can create error signals that cause erratic or erroneous measurements. The configuration shown in Figure C-1 introduces errors in two ways. Large ground currents flowing in one of the wires will encounter small resistances, either in the wires or at the connecting points. This small resistance results in voltage drops that can affect the measurement. Even if the ground loop currents are small, magnetic flux cutting across the large loops formed by the ground leads can induce sufficient voltages to disturb sensitive measurements.

Figure C-1
Power line ground loops

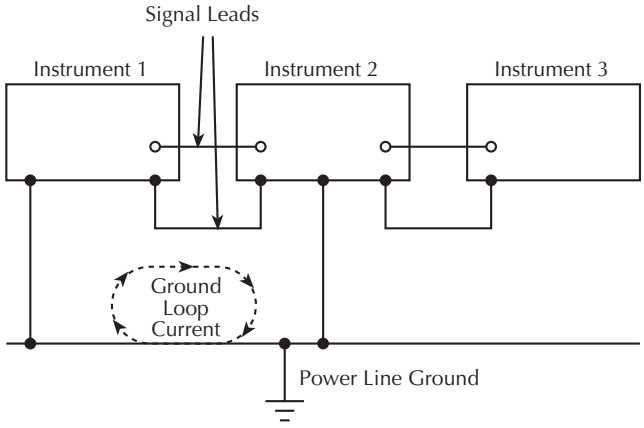

To prevent ground loops, instruments should be connected to ground at only a single point as shown in Figure C-2. Note that only a single instrument is connected directly to power line ground. Experimentation is the best way to determine an acceptable arrangement. For this purpose, measuring instruments should be placed on their lowest ranges. The configuration that results in the lowest noise signal is the one that should be used. A convenient way to make this connection uses the ground link at the rear of the 6485.

Figure C-2
Eliminating ground loops

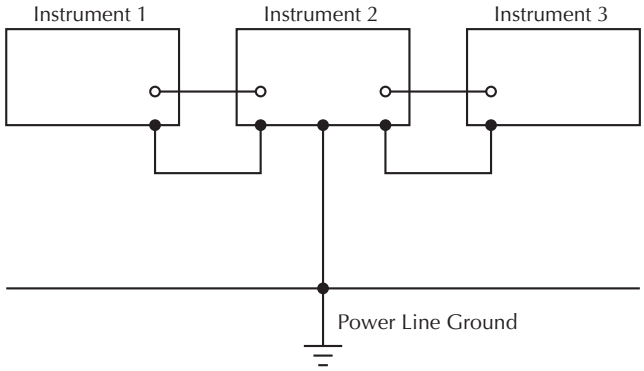

Triboelectric effects

Triboelectric currents are generated by charges created between a conductor and an insulator due to friction. Here, free electrons rub off the conductor and create a charge imbalance that causes the current flow. For example, bending a triaxial cable causes friction between the center conductor (HI) and its surrounding insulator resulting in triboelectric currents. Triboelectric currents can be minimized as follows:

- Use “low noise” cables. These cables are specially designed to minimize charge generation and use graphite to reduce friction. The Keithley Model 4801–4803 cables are low noise.
- Use the shortest cables possible, and secure them (i.e., taping or tying) to a non-vibrating surface to keep them from moving.

Piezoelectric and stored charge effects

Piezoelectric currents are generated when mechanical stress is applied to certain insulating materials (i.e., crystalline). In some plastics, pockets of stored charge cause the material to behave in a similar manner.

When building test fixtures, choose good insulating materials and make connecting structures as rigid as possible. Make sure there are no mechanical stresses on the insulators.

Electrochemical effects

Error currents also arise from electrochemical effects when ionic chemicals create weak batteries on a circuit board. These batteries could generate a few nanoamps of current between conductors. Ionic contamination may be the result of body oils, salts or solder flux. The problem is further enhanced by high humidity (moisture) that decreases insulation resistance.

When building test fixtures, select insulators that resist water absorption, and use the fixture in a moderate humidity environment. Also, be sure that all insulators are kept clean and free of contamination. See "Handling and cleaning test fixtures," page 2-10 for cleaning tips.

Humidity

Excess humidity can reduce insulation resistance on PC boards and in test connection insulators. Reduction in insulation resistance can, of course, seriously affect high-impedance measurements. Also, humidity (moisture) can combine with contaminants to produce offset currents caused by electrochemical effects see "Electrochemical effects," page C-4. To minimize the effects of moisture, keep humidity to a minimum (ideally <50%), and keep components and connectors in the test system clean. See "Handling and cleaning test fixtures," page 2-10 for cleaning tips.

Light

Some components, such as semiconductor junctions and MOS capacitors on semiconductor wafers, are excellent light detectors. Consequently, these components must be tested in a light-free environment. While many test fixtures provide adequate light protection, others may allow sufficient light penetration to affect the test results. Areas to check for light leaks include doors and door hinges, tubing entry points, and connectors or connector panels. With this in mind, the Model 6485 display may be turned off either through the front panel by pressing the DISP, or over the bus by sending the :DISP:ENAB OFF command.

Electrostatic interference

Electrostatic interference occurs when an electrically charged object is brought near an uncharged object, thus inducing a charge on the previously uncharged object. Usually, effects of such electrostatic action are not noticeable because low impedance levels allow the induced charge to dissipate quickly. However, the high impedance levels of many measurements do not allow these charges to decay rapidly and erroneous or unstable readings may result. These erroneous or unstable readings may be caused in the following ways:

1. DC electrostatic field can cause undetected errors or noise in the reading.
2. AC electrostatic fields can cause errors by driving the input preamplifier into saturation, or through rectification that produces DC errors.

Electrostatic interference is first recognizable when hand or body movements near the experiment cause fluctuations in the reading. Pick-up from AC fields can also be detected by observing the picoammeter analog output on an oscilloscope. Line frequency signals on the output are an indication that electrostatic interference is present. Means of minimizing electrostatic interference include:

1. Shielding. Possibilities include: a shielded room, a shielded booth, shielding the sensitive circuit, and using shielded cable. The shield should always be connected to a solid connector that is connected to signal low. If circuit low is floated above ground, observe safety precautions, and avoid touching the shield. Meshed screen or loosely braided cable could be inadequate for high impedances, or in string fields. Note, however, that shielding can increase capacitance in the measuring circuit, possibly slowing down response time.
2. Reduction of electrostatic fields. Moving power lines or other sources away from the experiment reduces the amount of electrostatic interference seen in the measurement.

Magnetic fields

A magnetic field passing through a loop in a test circuit will generate a magnetic EMF (voltage) that is proportional to the strength of the field, the loop area, and the rate at which these factors are changing. Magnetic fields can be minimized by following these guidelines:

- Locate the test circuit as far away as possible from such magnetic field sources as motors, transformers, and magnets.
- Avoid moving any part of the test circuit within the magnetic field.
- Minimize the loop area by keeping leads as short as possible and twisting them together.

Electromagnetic Interference (EMI)

The electromagnetic interference characteristics of the Model 6485 comply with the electromagnetic compatibility (EMC) requirements of the European Union as denoted by the CE mark. However, it is still possible for sensitive measurements to be affected by external sources. In these instances, special precautions may be required in the measurement setup.

Sources of EMI include:

- Radio and TV broadcast transmitters.
- Communications transmitters, including cellular phones and handheld radios.
- Devices incorporating microprocessors and high-speed digital circuits.
- Impulse sources as in the case of arcing in high-voltage environments.

The effect on instrument performance can be considerable if enough of the unwanted signal is present. The effects of EMI can be seen as an unusually large offset, or, in the case of impulse sources, erratic variations in the displayed reading.

The instrument and experiment should be kept as far away as possible from any EMI sources. Additional shielding of the instrument, experiment and test leads will often reduce EMI to an acceptable level. In extreme cases, a specially constructed screen room may be required to sufficiently attenuate the troublesome signal.

External filtering of the input signal path may be required. In some cases, a simple one-pole filter may be sufficient. In more difficult situations, multiple notch or band-stop filters, tuned to the offending frequency range, may be required. Connecting multiple capacitors of widely different values in parallel will maintain a low impedance across a wide frequency range. Keep in mind, however, that such filtering may have detrimental effects (such as increased response time) on the measurement.

D
DDC Emulation Commands

DDC language

The Model 6485 can be configured to accept device-dependent commands (DDC) of the Keithley Model 485 picoammeter. The commands for controlling the Model 6485 with the DDC language are provided in Table D-1. For details on Model 485 operation, refer to the appropriate instruction manual.

Since the architecture of the Model 6485 differs from that of the other picoammeters, some commands are different and cannot be used. Be sure to refer to the notes at the end of the table for information on command restrictions. Commands marked NDS are not directly supported in the SPCI command set. For convenience, some new DDC commands have been added to the 485 command set to allow use of the expanded capabilities of the 6485. These commands are marked NEW.

CAUTION **The DDC language is intended to be used only over the IEEE-488 bus. Using front panel controls in conjunction with this language may cause erratic operation. In this case, results cannot be guaranteed.**

Table D-1
Device dependent command summary

Mode	Command	Description `Equivalent SCPI commands`	Note	Default

Reading Mode	B0	Picoammeter Readings
		`READ?, FETCh?, MEAS?, or`
		`[SENSe[1]]:DATA[:LATest]?`
			NDS, NEW	X

	B1	Buffer reading (returns one at a time) `TRACe:DATA? (returns entire buffer)`	NDS, NEW	

	B2	Maximum reading from buffer
		`CALCulate3:FORMat MAXimum`
		`CALCulate3:DATA?`
			NDS, NEW	

	B3	Minimum reading from buffer
		`CALCulate3:FORMat MINimum`
		`CALCulate3:DATA?`
			NDS, NEW	

Zero Check	C0	Zero Check off `SYSTem:ZCHeck OFF`		X
	C1	Zero Check on `SYSTem:ZCHeck ON`		
LOG	D0	LOG off `CALCulate[1]:STATe OFF`		X

	D1	LOG on
		`CALCulate[1]:FORMat LOG10`
		`CALCulate[1]:STATe ON`		

Table D-1 (continued)
Device dependent command summary

Mode	Command	Description `Equivalent SCPI commands`	Note	Default
Data Format	G0	Reading with prefix (NDCA-1.23456E-02)	SCPI not avail-able—see FORMat subsystem.	X
	G1	Reading without prefix (-1.23456E-02)		
	G2	Reading with prefix and buffer suffix (if in B1) (NDCA-1.23456E-02,012)NEW		
Buffer Size	In	Set buffer size, where “n”=1–2500	A	100
Digits	Jn	Set number of digits of precision to return over the bus, where “n”=4–7 (allowed range)	NEW	5
EOI and Bus Hold-off	K0	Enable both EOI and bus hold-off on X	SCPI not available	X
	K1	Disable EOI, enable bus hold-off on X	SCPI not available	
	K2	Enable EOI, disable bus hold-off on X NEW	SCPI not available	
	K3	Disable both EOI and bus hold-off on X NEW	SCPI not available	

Store Calibration	none	L0 (store calibration) command not supported
		`CALibration:PROTected:SAVE`
		`CALibration:PROTected:LOCK`
			F, G	

SRQ	M0	Clears SRQ Data Mask `STATus:MEASurement[:EVENt]:ENABle 0` `*SRE` <*value*> *value* = (current *SRE value) &= (~0x01)	Status Bits Set (None)	X
	M1	Reading Overflow `STATus:MEASurement[:EVENt]:ENABle 128` `*SRE` <*value*> *value* = (current *SRE value) |= (0x01)	(B0)	
	M2	Data Store Full `STATus:MEASurement[:EVENt]:ENABle 512` `*SRE` <*value*> *value* = (current *SRE value) |= (0x01)	(B1) NEW	
	M3	Data Store Full or Reading Overflow `STATus:MEASurement[:EVENt]:ENABle 640` `*SRE` <*value*> *value* = (current *SRE value) |= (0x01)	(B1, B0) NEW	

Table D-1 (continued)
Device dependent command summary

Mode	Command	Description `Equivalent SCPI commands`	Note	Default
SRQ *(cont.)*	M8	Reading Done `STATus:MEASurement[:EVENt]:ENABle 64` `*SRE` <*value*> *value* = (current *SRE value) |= (0x01)	(B3)	
	M9	Reading Done or Reading Overflow `STATus:MEASurement[:EVENt]:ENABle 192` `*SRE` <*value*> *value* = (current *SRE value) |= (0x01)	(B3, B0)	
	M10	Reading Done or Data Store Full `STATus:MEASurement[:EVENt]:ENABle 576` `*SRE` <*value*> *value* = (current *SRE value) |= (0x01)	(B3, B1) NEW	
	M11	Reading Done or Data Store Full or Reading Overflow `STATus:MEASurement[:EVENt]:ENABle 704` `*SRE` <*value*> *value* = (current *SRE value) |= (0x01)	(B3, B1, B0) NEW	
	M16	Busy `*ESE 1` `*SRE` <*value*> *value* = (current *SRE value) |= (0x20)	(B4) H	

	M17	Busy or Reading Overflow
		`*ESE 1`
		`STATus:MEASurement[:EVENt]:ENABle 128`
		`*SRE` <*value*>
		value = (current *SRE value) |= (0x20|0x01)
			(B4, B0)
			H	

	M18	Busy or Data Store Full
		`*ESE 1`
		`STATus:MEASurement[:EVENt]:ENABle 512`
		`*SRE` <*value*>
		value = (current *SRE value) |= (0x20|0x01)
			(B4, B1)
			NEW, H	

	M19	Busy or Data Store Full or Reading Overflow
		`*ESE 1`
		`STATus:MEASurement[:EVENt]:ENABle 640`
		`*SRE` <*value*>
		value = (current *SRE value) |= (0x20|0x01)
			(B4, B1, B0)
			NEW, H	

	M24	Busy or Reading Done
		`*ESE 1`
		`STATus:MEASurement[:EVENt]:ENABle 64`
		`*SRE` <*value*>
		value = (current *SRE value) |= (0x20|0x01)
			(B4, B3)
			H	

Table D-1 (continued)
Device dependent command summary

Mode	Command	Description `Equivalent SCPI commands`	Note	Default

SRQ
(cont.)
	M25	Busy, Reading Done or Reading Overflow
		`*ESE 1`
		`STATus:MEASurement[:EVENt]:ENABle 192`
		`*SRE <`*value*`>`
		value = (current *SRE value) |= (0x20|0x01)
			(B4, B3, B0)
			H	

	M26	Busy or Reading Done or Data Store Full
		`*ESE 1`
		`STATus:MEASurement[:EVENt]:ENABle 576`
		`*SRE <`*value*`>`
		value = (current *SRE value) |= (0x20|0x01)
			(B4, B3, B1)
			NEW, H	

	M27	Busy or Reading Done or Data Store Full or Reading Overflow
		`*ESE 1`
		`STATus:MEASurement[:EVENt]:ENABle 704`
		`*SRE <`*value*`>`
		value = (current *SRE value) |= (0x20|0x01)
			(B4, B3, B1, B0)
			NEW, H	

	M32	Clears SRQ Error Mask `*ESE 0` (this disables all events in the Standard Event Register) `*SRE <`*value*`>` *value* = (current *SRE value) &= (~ESB)	(None)	X
	M33	IDDCO	(B5, B0), I	
	M34	IDDC	(B5, B1), I	
	M35	IDDC or IDDCO	(B5, B1, B0), I	
	M36	Not in Remote	(B5, B2), I	
	M37	Not in Remote or IDDCO	(B5, B2, B0), I	
	M38	Not in Remote or IDDC	(B5, B2, B1), I	
	M39	Not in Remote, IDDC or IDDCO `*ESE 48` Enables the SCPI command and Execution error events in the standard Event Register `*SRE <`*value*`>` *value* = (current *SRE value) |= (ESB). This Enables an SRQ on vents enabled in the Standard Event Register.	(B5, B2, B1, B0), I	

Table D-1 (continued)
Device dependent command summary

Mode	Command	Description `Equivalent SCPI commands`	Note	Default
Zero Correct	N0	Zero Correct disabled `SYSTem:ZCORrect:STATe OFF`	NEW	X

	N1	Zero Correct enabled
		`SYSTem:ZCORrect:ACQuire`
		`SYSTem:ZCORrect:STATe ON`
			NEW	

Digital Filter	P0	Filter off		X
	P1	Filter off		
	Pn	Repeat Filter on, where filter size “n” = 2 to 100	B	
Data Store (Buffer)	Q0	Conversion rate	See TRACe, ARM, and TRIGger sub-systems	
	Q1	One reading per second		
	Q2	One reading every 10 seconds		
	Q3	One reading per minute		
	Q4	One reading every 10 minutes		
	Q5	One reading per hour		
	Q6	Trigger mode		
	Q7	Disabled		X

Range	R0	Auto
		`[SENSe[1]][:CUR-`
		`Rent:[DC]]:RANGe[:UPPer]:AUTO ON`
				X

	R1	2nA
		`[SENSe[1]][:CUR-`
		`Rent:[DC]]:RANGe[:UPPer]:2e-9`		

	R2	20nA
		`[SENSe[1]][:CUR-`
		`Rent:[DC]]:RANGe[:UPPer]:20e-9`		

	R3	200nA
		`[SENSe[1]][:CUR-`
		`Rent:[DC]]:RANGe[:UPPer]:200e-9`		

	R4	2µA
		`[SENSe[1]][:CUR-`
		`Rent:[DC]]:RANGe[:UPPer]:2e-6`		

	R5	20µA
		`[SENSe[1]][:CUR-`
		`Rent:[DC]]:RANGe[:UPPer]:20e-6`		

	R6	200µA
		`[SENSe[1]][:CUR-`
		`Rent:[DC]]:RANGe[:UPPer]:200e-6`		

Table D-1 (continued)
Device dependent command summary

Mode	Command	Description Equivalent SCPI commands	Note	Default
Range *(cont.)*	R7	2mA `[SENSe[1]][:CURRent:[DC]]:RANGe[:UPPer]:2e-3`		
	R8	20mA `[SENSe[1]][:CURRent:[DC]]:RANGe[:UPPer]:20e-3`	NEW	
	R9	Cancel Auto range `[SENSe[1]]:CURRent:[DC]:RANGe[:UPPer]:AUTO OFF`	NEW	
Trigger Mode	T0	Continuous, triggered by talk	SCPI not available	X

	T1	One-shot, triggered by talk
		`ARM[:SEQuence[1]]:COUNt 1`
		`TRIGger[:SEQuence[1]]:COUNt 1`
			Only in 488.1 mode	

	T2	Continuous, triggered by GET
		`ARM[:SEQuence[1]]:SOURce BUS`
		`ARM[:SEQuence[1]]:COUNt 1`
		`TRIGger[:SEQuence[1]]:COUNt INF`
		`INIT[:IMMediate]`		

	T3	One-shot, triggered by GET
		`ARM[:SEQuence[1]]:SOURce BUS`
		`ARM[:SEQuence[1]]:COUNt INF`
		`TRIGger[:SEQuence[1]]:COUNt 1`
		`INIT[:IMMediate]`		

	T4	Continuous, triggered by X	SCPI Not Available	
	T5	One-shot, triggered by X	SCPI Not Available	

	T6	Continuous, triggered by External Trigger
		`ARM[:SEQuence[1]]:SOURce TLINk`
		`ARM[:SEQuence[1]]:SOURce COUNt 1`
		`TRIGger[:SEQuence[1]]:COUNt INF`
		`INITiate[:IMMediate]`
			NDS, NEW	

	T7	One-shot, triggered by External Trigger
		`ARM[:SEQuence[1]]:SOURce TLINk`
		`ARM[:SEQuence[1]]:SOURce COUNt INF`
		`TRIGger[:SEQuence[1]]:COUNt 1`
		`INITiate[:IMMediate]`
			NDS, NEW	

Table D-1 (continued)
Device dependent command summary

Mode	Command	Description `Equivalent SCPI commands`	Note	Default
Status Word	U0	Return status word. See Figure D-1. Each parameter must be queried individually. For example: `SENSe[1]:CURRent:RANGe?`		
	U1	Send data conditions. See Figure D-2.	NEW	
	U2	Buffer size and readings stored. See Figure D-3.	D, NEW	
Digital Calibration	V	Calibration commands (V+n.nnnnE+nn) not supported	G	
Execute	X	Execute other device-dependent commands. SCPI not applicable (SCPI commands execute as they are received)		
Terminator	Y(ASCII)	Not Available	C, NDS	
	Y0	LFCR (line feed, carriage return)	C, NDS	
	Y1	CRLF (carriage return, line feed)	C, NDS	X
	Y2	LF (line feed)	C, NDS	
	Y3	CR (carriage return)	C, NDS	
	Y4	None	C, NDS	
Baseline Suppres-sion (Rel)	Z0	Suppression (Rel) disabled `CALCulate2:NULL:STATe OFF`		

	Z1	Suppression (Rel) enabled
		`CALCulate2:NULL:ACQuire`
		`CALCulate2:NULL:STATe ON`		

A. The buffer size command (In) is not used by the Model 485. The buffer size command is similar to the SCPI TRACe:POINts command (see Section 6 for details).

B. The moving filter cannot be selected from the DDC language.

C. For Model 6485, the terminator commands (Y) to set the terminator are different from the Y commands used by the 485. Also note that the “YY” response to the U0 command is different.

D. For the Model 6485, the Buffer Full bit in the U1X status word does not get cleared until either the buffer is resized or buffer storage is reactivated. Note that requesting a buffer reading does not clear the U1 Buffer Full bit.

E. The U2 status command is not used by the Model 485. The response message indicates the buffer size (In) and the actual number of readings stored in the buffer.

F. Calibration must be already unlocked and enabled.

G. See CALibration subsystem.

H. Although there is not a ‘Busy’ event in the Model 6485 Status Model, there is an Operation Complete event (the compliment of ‘Busy’). This example refers to the use of the Operation Complete SRQ (rather than ‘Busy’).

I. The DDC errors do not map one-to-one mapping with SCPI errors. There are two SCPI errors that cover all of the 6485 Error Events (EE). This will be fairly equivalent to using the M39 DDC command. After getting an SRQ on an Error Event, to clear the event, read the Standard Event Register (*ESR?, then talk the instrument). There may also be an Error Available event set in the status byte (serial poll).

NDS: Not Directly Supported in Model 6485.

NEW: Commands added to 6485 that were not available in the 485 command set.

Figure D-1
U0 Status word

STATUS WORD

4 8 5 C D R Z K T M d M e Y

PREFIX

ZERO CHECK
0 = Off
1 = On

LOG
0 = Off
1 = On

RANGE
0 = Auto On
1 = 2nA
2 = 20nA
3 = 200nA
4 = 2µA
5 = 20µA
6 = 200µA
7 = 2mA
8 = 20mA
9 = Auto Off

RELATIVE
0 = Off
1 = On

EOI

Value	Send EOI	Bus hold-off on X
0	Yes	Enable
1	No	Enable
2	Yes	Disable
3	No	Disable

TRIGGER
0 = Continuous on Talk
1 = One-shot on Talk
2 = Continuous on Get
3 = One-shot on Get
4 = Continuous on "X"
5 = One-shot on "X"
6 = Continuous on External Trigger
7 = One-shot on External Trigger

SRQ Data Mask* (see Legend)
00 = SRQ Disabled
01 = Reading Overflow
02 = DSF
03 = DSF or Overflow
08 = Done
09 = Done or Overflow
10 = DSF or Done
11 = DSF or Done or Overflow
16 = Busy
17 = Busy or Overflow
18 = DSF or Busy
19 = DSF or Busy or Overflow
24 = Busy or Done
25 = Busy, Done, or Overflow
26 = DSF or Busy or Done
27 = DSF or Busy or Done or Overflow

SRQ Error Mask*
00 = SRQ Disabled
01 = IDDCO
02 = IDDC
03 = IDCCO or IDCC
04 = Not in Remote
05 = Not in Remote or IDDCO
06 = Not in Remote or IDDC
07 = Not in Remote, IDDCO, or IDDC

TERMINATOR
: CR LF
= LF CR
, LF
. CR
None

SRQ Data Mask Legend
Overflow = Reading Overflow
DSF = Data Store Full
Done = Reading Done
Busy = Busy

***Also see Byte 5 in Status Byte**

Figure D-2
U1 Status word

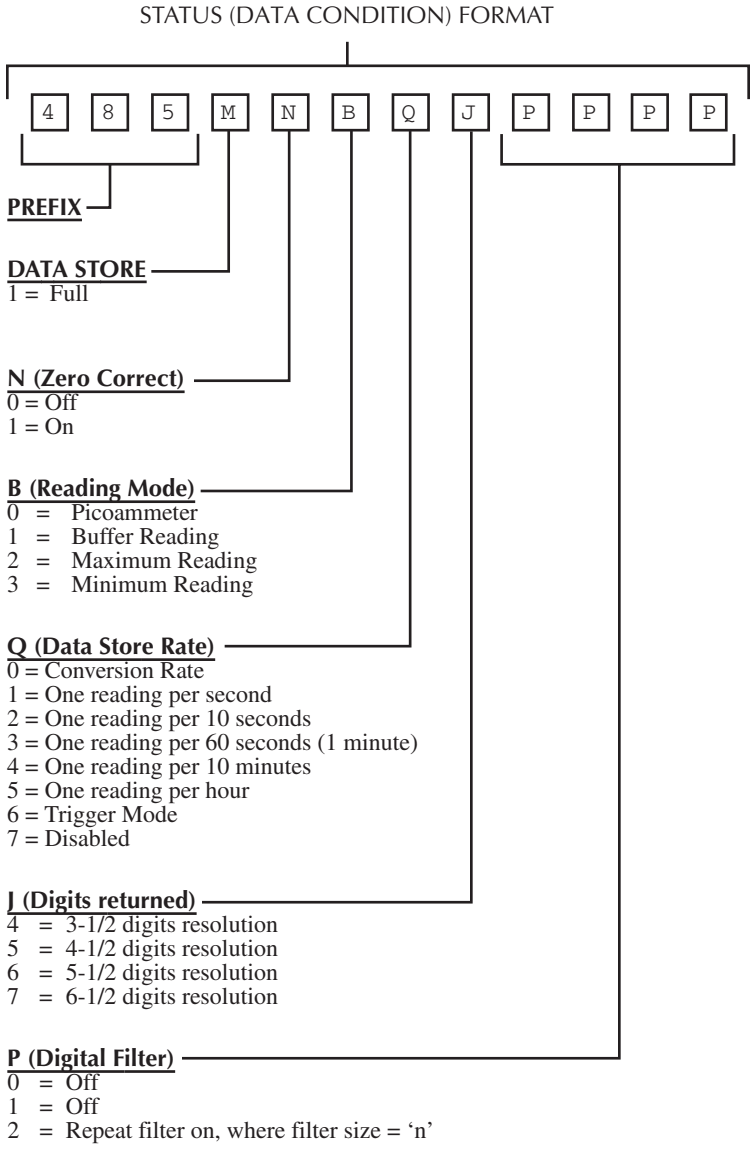

Figure D-3
U2 Status word

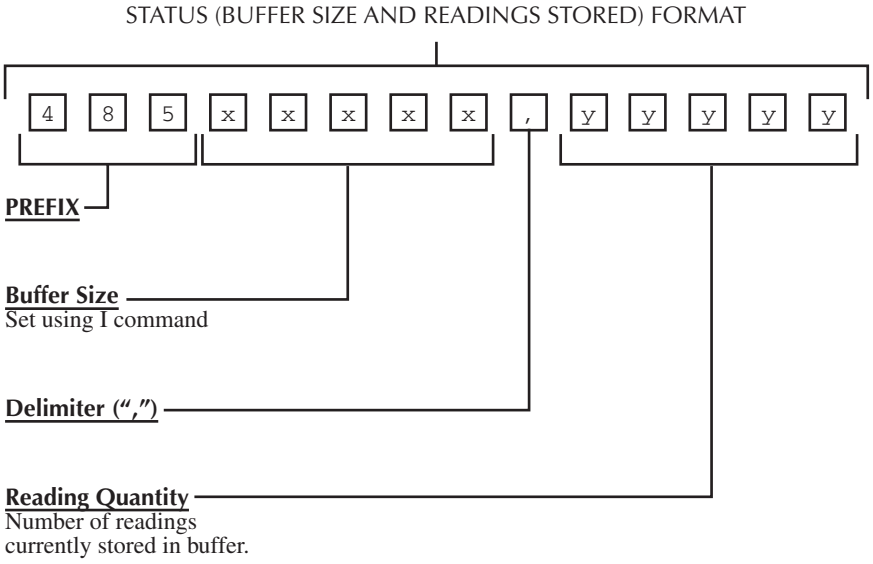

Status Byte Format

The status byte contains information relating to data and error conditions within the instrument. When a particular bit is set, certain conditions are present. Table D-2 lists the meanings of the various bits, and Figure D-4 shows the general format of the status byte, which is obtained by using the SPE, SPD polling sequence.

If the status byte is read when no SRQ was generated by the Model 6485 (bit 6 is clear), the current status of the instrument will be read. For example, if a reading was done, bit 3 would be set.

When an SRQ is generated by the Model 6485, bit 6 of the status byte will be set. If the SRQ was caused by an error condition, bit 5 will also be set along with one of the error condition bits (B0, B1, or B2). Only the error that caused the initial SRQ will be defined by the status byte.

If the SRQ was caused by a data condition, bit 5 will be clear and the appropriate data condition bits (B0, B1, B3, and B4) will be set. If the reading overflow condition caused the SRQ, then only the reading overflow bit will be set.

After an SRQ, the status byte will remain unchanged until it is read.

The various bits in the status byte are described below:

Reading Overflow — Set when an overrange input is applied to the instrument.

Data Store Full — Set when the number of readings stored is equal to the buffer size.

Reading Done — Set when the instrument has completed the present conversion and is ready to take another reading.

Busy — The instrument is still executing a prior command and is not yet ready to accept a new command.

IDDCO — An illegal command option such as R8 has been sent. This bit is cleared when the status byte is read.

IDDC — An illegal command will set this bit. For example, S1 is illegal since no such letter exists in the command set. The IDDC bit will be cleared on a reading of the status byte.

Not in remote — Model 6485 in local mode of operation.

NOTE *Once the Model 6485 has generated an SRQ, its status byte must be read to clear the SRQ line. Otherwise, the instrument will continuously assert SRQ.*

The Model 6485 may be programmed to generate an SRQ for more than one condition simultaneously.

Table D-2
Status byte and mask interpretation

Bit	Bit 5=0 (Data Conditions)	Bit 5=1 (Error Conditions)
0 (LSB)	Overflow	IDDCO
1	Data Store Full	IDDC
2	N/A	No remote
3	Reading done	N/A
4	Busy	N/A
5	Data	Error
6	SRQ	SRQ
7	N/A	N/A

Figure D-4
Status byte format

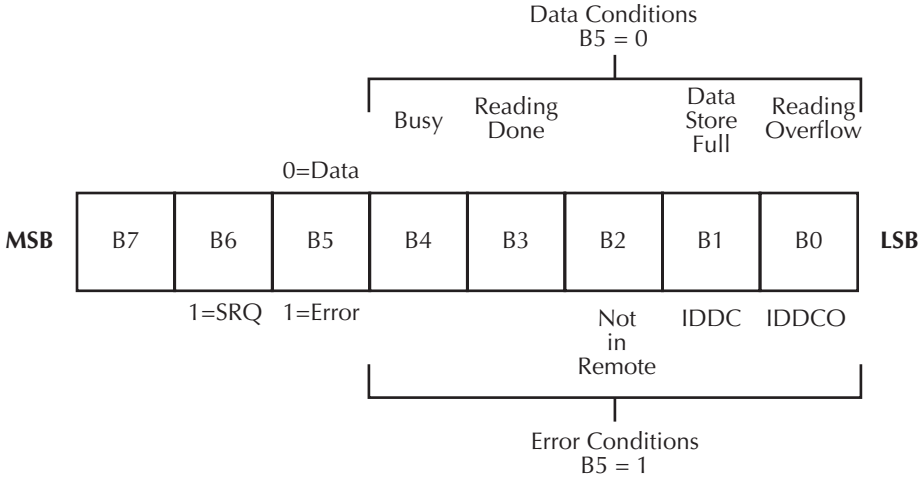

E
Example Programs

Programming examples

This section contains example programs (pseudo-code) to achieve speed specifications (for a specific example of a QuickBasic program using SRQ, see Figure G-2):

1000 readings/second into internal buffer

NOTE *This program configures the Model 6485 to 0.01 PLC, digital filters off, front panel off, auto-zero off, as well as takes and stores 2500 readings.*

```
*RST                        ' Return 6485 to RST defaults.
TRIG:DEL 0                  ' Set trigger delay to zero seconds
TRIG:COUNT 2500             ' Set trigger count to 2500
SENS:CURR:RANG:AUTO OFF     ' Turn auto-range off
SENS:CURR:NPLC .01          ' Set integration rate to .01 PLC
SENS:CURR:RANG .002         ' Use 2mA range
SYST:ZCH OFF                ' Turn zero check off
SYST:AZER:STAT OFF          ' Turn auto-zero off

DISP:ENAB OFF               ' Turn display off
*CLS                        ' Clear status model

TRAC:POIN 2500              ' Set buffer size to 2500
TRAC:CLE                    ' Clear buffer
TRAC:FEED:CONT NEXT         ' Set storage control to start on next
                            ' reading
STAT:MEAS:ENAB 512          ' Enable buffer full measurement event
*SRE 1                      ' Enable SRQ on buffer full measurement
                            ' event

*OPC?                       ' operation complete query
                            ' (synchronize completion of commands)
read back result of *opc?

INIT                        ' start taking and storing readings
                              wait for GPIB SRQ line to go true

DISP:ENAB ON                ' turn display back on

TRAC:DATA?                  ' Request data from buffer
read back result
```

900 readings/second to IEEE-488 bus

This program uses multiple reading queries to get high speed measurements over the bus in real time. To improve continuity of readings, reduce the trigger count. To improve throughput, increase the trigger count.

NOTE *This program configures the Model 6485 to 0.01 PLC, digital filters off, front panel off, auto-zero off, binary transfer, and IEEE-488.1 (language).*

Model 6485 must be set to IEEE-488.1 operation from the front panel, see *page G-4*.

```
*RST                        ' Return 6485 to RST defaults.
FORM:ELEM READ              ' Return readings only
FORM:BORD SWAP              ' Set for swapped byte order
FORM:DATA SRE               ' Return single precision floating
                            ' point binary
TRIG:DEL 0                  ' Set trigger delay to zero seconds
TRIG:COUNT 8                ' Set trigger count to 8

SENS:CURR:NPLC .01          ' Set integration rate to .01 PLC
SENS:CURR:RANG .002         ' Use 2mA range
SENS:CURR:RANG:AUTO OFF     ' Turn auto-range off

SYST:ZCH OFF                ' Turn zero check off
SYST:AZER:STAT OFF          ' Turn auto-zero off

DISP:ENAB OFF               ' Turn display off

*OPC?                       ' Operation complete query (synchro
                            ' nize completion of commands)
read back result of *opc?

for i = 1 to 1000
"talk" the Model 6485.      ' In 488.1 mode this will
                            ' automatically do a READ?
                            ' (see "Trigger-on-talk," page G-7)
read back the binary data
next i

DISP:ENAB ON                ' Turn display back on
```

F
IEEE-488 Bus Overview

Introduction

The IEEE-488 bus is a communication system between two or more electronic devices. A device can be either an instrument or a computer. When a computer is used on the bus, it serves as a supervisor of the communication exchange between all the devices and is known as the controller. Supervision by the controller consists of determining which device will talk and which device will listen. As a talker, a device will output information and as a listener, a device will receive information. To simplify the task of keeping track of the devices, a unique address number is assigned to each.

On the bus, only one device can talk at a time and is addressed to talk by the controller. The device that is talking is known as the active talker. The devices that need to listen to the talker are addressed to listen by the controller. Each listener is then referred to as an active listener. Devices that do not need to listen are instructed to unlisten. The reason for the unlisten instruction is to optimize the speed of bus information transfer since the task of listening takes up bus time.

Through the use of control lines, a handshake sequence takes place in the transfer process of information from a talker to a listener. This handshake sequence helps ensure the credibility of the information transfer. The basic handshake sequence between an active controller (talker) and a listener is as follows:

1. The listener indicates that it is ready to listen.
2. The talker places the byte of data on the bus and indicates that the data is available to the listener.
3. The listener, aware that the data is available, accepts the data and then indicates that the data has been accepted.
4. The talker, aware that the data has been accepted, stops sending data and indicates that data is not being sent.
5. The listener, aware that there is no data on the bus, indicates that it is ready for the next byte of data.

Bus description

The IEEE-488 bus, which is also referred to as the GPIB (General Purpose Interface Bus), was designed as a parallel transfer medium to optimize data transfer without using an excessive number of bus lines. In keeping with this goal, the bus has only eight data lines that are used for both data and with most commands. Five bus management lines and three handshake lines round out the complement of bus signal lines.

A typical setup for controlled operation is shown in Figure F-1. Generally, a system will contain one controller and a number of other instruments to which the commands are given. Device operation is categorized into three operators: controller, talker, and listener. The controller controls the instruments on the bus. The talker sends data while a listener

receives data. Depending on the type of instrument, any particular device can be a talker only, a listener only, or both a talker and listener.

There are two categories of controllers: system controller and basic controller. Both are able to control other instruments, but only the system controller has the absolute authority in the system. In a system with more than one controller, only one controller may be active at any given time. Certain protocol is used to pass control from one controller to another.

The IEEE-488 bus is limited to 15 devices, including the controller. Thus, any number of talkers and listeners up to that limit may be present on the bus at one time. Although several devices may be commanded to listen simultaneously, the bus can have only one active talker, or communications would be scrambled.

A device is placed in the talk or listen state by sending an appropriate talk or listen command. These talk and listen commands are derived from an instrument's primary address. The primary address may have any value between 0 and 31, and is generally set by rear panel DIP switches or programmed in from the front panel of the instrument. The actual listen address value sent out over the bus is obtained by ORing the primary address with $20. For example, if the primary address is $14, the actual listen address is $34 ($34 = $14 + $20). In a similar manner, the talk address is obtained by ORing the primary address with $40. With the present example, the talk address derived from a primary address of $14 would be $54 ($54 = $14 + $40).

The IEEE-488 standards also include another addressing mode called secondary addressing. Secondary addresses lie in the range of $60-$7F. Note, however, that many devices, including the Model 6485, do not use secondary addressing.

Once a device is addressed to talk or listen, the appropriate bus transactions take place. For example, if the instrument is addressed to talk, it places its data string on the bus one byte at a time. The controller reads the information, and the appropriate software can be used to direct the information to the desired location.

Figure F-1
IEEE-488 bus configuration

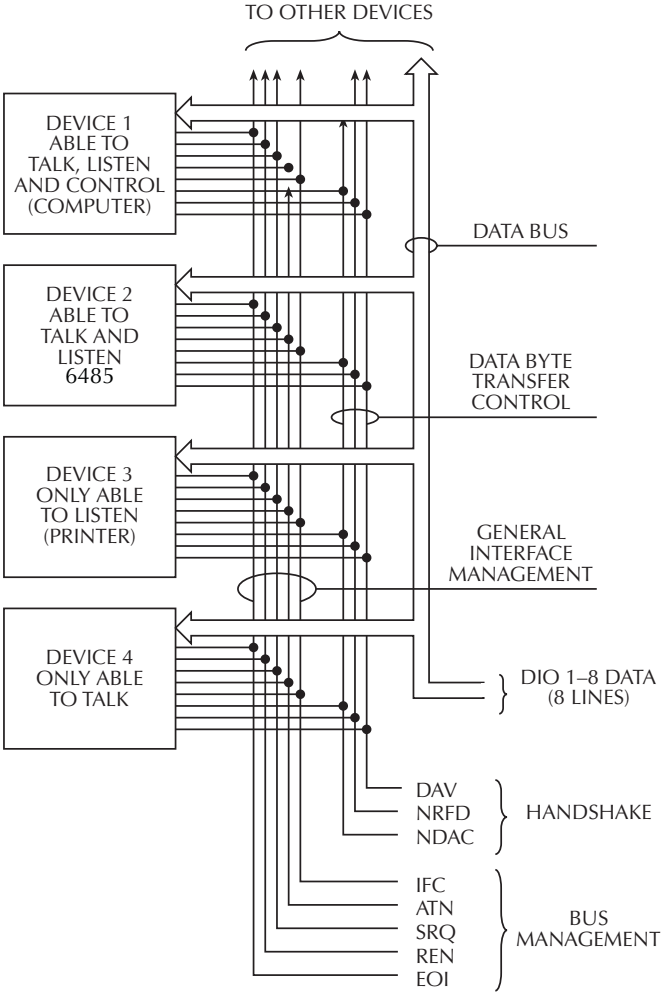

Bus lines

The signal lines on the IEEE-488 bus are grouped into three different categories: data lines, management lines, and handshake lines. The data lines handle bus data and commands, while the management and handshake lines ensure that proper data transfer and operation takes place. Each bus line is active low, with approximately zero volts representing a logic 1 (true). The following paragraphs describe the operation of these lines.

Data lines

The IEEE-488 bus uses eight data lines that transfer data one byte at a time. DIO1 (Data Input/Output) through DIO8 (Data Input/Output) are the eight data lines used to transmit both data and multiline commands and are bi-directional. The data lines operate with low true logic.

Bus management lines

The five bus management lines help to ensure proper interface control and management. These lines are used to send the uniline commands.

ATN (Attention) — The ATN state determines how information on the data bus is to be interpreted.

IFC (Interface Clear) — The IFC line controls clearing of instruments from the bus.

REN (Remote Enable) — The REN line is used to place the instrument on the bus in the remote mode.

EOI (End or Identify) — The EOI line is used to mark the end of a multi-byte data transfer sequence.

SRQ (Service Request) — The SRQ line is used by devices when they require service from the controller.

Handshake lines

The bus handshake lines operate in an interlocked sequence. This method ensures reliable data transmission regardless of the transfer rate. Generally, data transfer will occur at a rate determined by the slowest active device on the bus.

One of the three handshake lines is controlled by the source (the talker sending information), while the remaining two lines are controlled by accepting devices (the listener or listeners receiving the information). The three handshake lines are:

DAV (DATA VALID) — The source controls the state of the DAV line to indicate to any listening devices whether or not data bus information is valid.

NRFD (Not Ready For Data) — The acceptor controls the state of NRFD. It is used to signal to the transmitting device to hold off the byte transfer sequence until the accepting device is ready.

NDAC (Not Data Accepted) — NDAC is also controlled by the accepting device. The state of NDAC tells the source whether or not the device has accepted the data byte.

The complete handshake sequence for one data byte is shown in Figure F-2. Once data is placed on the data lines, the source checks to see that NRFD is high, indicating that all active devices are ready. At the same time, NDAC should be low from the previous byte

transfer. If these conditions are not met, the source must wait until NDAC and NRFD have the correct status. If the source is a controller, NRFD and NDAC must be stable for at least 100ns after ATN is set true. Because of the possibility of a bus hang up, many controllers have time-out routines that display messages in case the transfer sequence stops for any reason.

Once all NDAC and NRFD are properly set, the source sets DAV low, indicating to accepting devices that the byte on the data lines is now valid. NRFD will then go low, and NDAC will go high once all devices have accepted the data. Each device will release NDAC at its own rate, but NDAC will not be released to go high until all devices have accepted the data byte.

The previous sequence is used to transfer both data, talk and listen addresses, as well as multiline commands. The state of the ATN line determines whether the data bus contains data, addresses, or commands as described in the following paragraphs.

Figure F-2
IEEE-488 handshake sequence

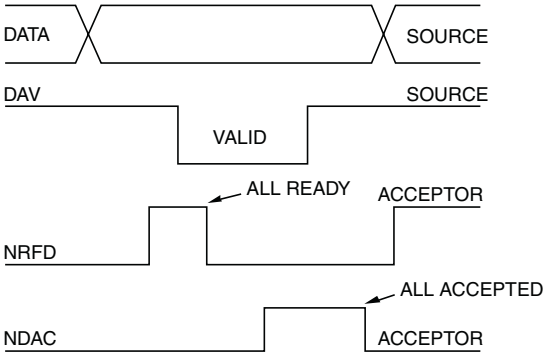

Bus commands

The instrument may be given a number of special bus commands through the IEEE-488 interface. The following paragraphs briefly describe the purpose of the bus commands which are grouped into the following three categories.

1. Uniline commands — Sent by setting the associated bus lines true. For example, to assert REN (Remote Enable), the REN line would be set low (true).
2. Multiline commands — General bus commands which are sent over the data lines with the ATN line true (low).
3. Common commands — Commands that are common to all devices on the bus; sent with ATN high (false).
4. SCPI commands — Commands that are particular to each device on the bus; sent with ATN (false).

These bus commands and their general purpose are summarized in Table F-1.

Table F-1
IEEE-488 bus command summary

Command type	Command	State of ATN line	Comments
Uniline	REN (Remote Enable)	X	Set up devices for remote operation.
	EOI	X	Marks end of transmission.
	IFC (Interface Clear)	X	Clears interface.
	ATN (Attention)	Low	Defines data bus contents.
	SRQ	X	Controlled by external device.
Multiline Universal	LLO (Local Lockout)	Low	Locks out local operation.
	DCL (Device Clear)	Low	Returns device to default conditions.
	SPE (Serial Enable)	Low	Enables serial polling.
	SPD (Serial Poll Disable)	Low	Disables serial polling.
Addressed	SDC (Selective Device Clear)	Low	Returns unit to default conditions.
	GTL (Go To Local)	Low	Returns device to local.
Unaddressed	UNL (Unlisten)	Low	Removes all listeners from the bus.
	UNT (Untalk)	Low	Removes any talkers from the bus.
Common	—	High	Programs IEEE-488.2 compatible instruments for common operations.
SCPI	—	High	Programs SCPI compatible instruments for particular operations.

Table F-2
Command codes

D_7 D_6 D_5 D_4						X 0 0 0	Command	X 0 0 1	Command	X 0 1 0	Primary Address	X 0 1 1	Primary Address	X 1 0 0	Primary Address	X 1 0 1	Primary Address	X 1 1 0		X 1 1 1	
Bits	**D_3 ↓**	**D_2 ↓**	**D_1 ↓**	**D_0 ↓**	**Column → Row ↓**	**0 (A)**	**0 (B)**	**1 (A)**	**1 (B)**	**2 (A)**	**2 (B)**	**3 (A)**	**3(B)**	**4 (A)**	**4 (B)**	**5 (A)**	**5 (B)**	**6 (A)**	**6 (B)**	**7 (A)**	**7 (B)**
	0	0	0	0	0	NUL		DLE		SP	0	0	16	@	0	P	16			p	
	0	0	0	1	1	SOH	GTL	DC1	LLO	!	1	1	17	A	1	Q	17	a		q	
	0	0	1	0	2	STX		DC2		“	2	2	18	B	2	R	18	b		r	
	0	0	1	1	3	ETX		DC3		#	3	3	19	C	3	S	19	c		s	
	0	1	0	0	4	EOT	SDC	DC4	DCL	$	4	4	20	D	4	T	20	d		t	
	0	1	0	1	5	ENQ	PPC*	NAK	PPU*	%	5	5	21	E	5	U	21	e		u	
	0	1	1	0	6	ACK		SYN		&	6	6	22	F	6	V	22	f		v	
	0	1	1	1	7	BEL		ETB		‘	7	7	23	G	7	W	23	g		w	
	1	0	0	0	8	BS	GET	CAN	SPE	(	8	8	24	H	8	X	24	h		x	
	1	0	0	1	9	HT	TCT*	EM	SPD	)	9	9	25	I	9	Y	25	i		y	
	1	0	1	0	10	LF		SUB		•	10	:	26	J	10	Z	26	j		z	
	1	0	1	1	11	VT		ESC		+	11	;	27	K	11	[	27	k		{	
	1	1	0	0	12	FF		FS		,	12	<	28	L	12	\	28	l		:	
	1	1	0	1	13	CR		GS		-	13	=	29	M	13	]	29	m		}	
	1	1	1	0	14	SO		RS		.	14	>	30	N	14		30	n		≅	
	1	1	1	1	15	SI		US		/	15	?	UNL	O	15	∞	UNT	o		DEL	
						ADDRESSED COMMAND GROUP (ACG)		UNIVERSAL COMMAND GROUP (UCG)		LISTEN ADDRESS GROUP (LAG)				TALK ADDRESS GROUP (TAG)							
						PRIMARY COMMAND GROUP (PCG)												SECONDARY COMMAND GROUP (SDC)			

*PPC (PARALLEL POLL CONFIGURE) PPU (PARALLEL POLL UNCONFIGURE), and TCT (TAKE CONTROL) not implemented by Model 6485.
Note: D_0 = DIO1 ... D_7 = DIO8; X = Don’t Care.

Uniline commands

ATN, IFC, and REN are asserted only by the controller. SRQ is asserted by an external device. EOI may be asserted either by the controller or other devices depending on the direction of data transfer. The following is a description of each command. Each command is sent by setting the corresponding bus line true.

REN (Remote Enable) — REN is sent to set up instruments on the bus for remote operation. When REN is true, devices will be removed from the local mode. Depending on device configuration, all front panel controls, except the LOCAL button (if the device is so equipped), may be locked out when REN is true. Generally, REN should be sent before attempting to program instruments over the bus.

EOI (End or Identify) — EOI is used to positively identify the last byte in a multi-byte transfer sequence, thus allowing data words of various lengths to be transmitted easily.

IFC (Interface Clear) — IFC is used to clear the interface and return all devices to the talker and listener idle states.

ATN (Attention) — The controller sends ATN while transmitting addresses or multiline commands.

SRQ (Service Request) — SRQ is asserted by a device when it requires service from a controller.

Universal multiline commands

Universal commands are those multiline commands that require no addressing. All devices equipped to implement such commands will do so simultaneously when the commands are transmitted. As with all multiline commands, these commands are transmitted with ATN true.

LLO (Local Lockout) — LLO is sent to the instrument to lock out the LOCAL key and all their front panel controls.

DCL (Device Clear) — DCL is used to return instruments to some default state. Instruments usually return to their power-up conditions.

SPE (Serial Poll Enable) — SPE is the first step in the serial polling sequence which is used to determine which device has requested service.

SPD (Serial Poll Disable) — SPD is used by the controller to remove all devices on the bus from the serial poll mode and is generally the last command in the serial polling sequence.

Addressed multiline commands

Addressed commands are multiline commands that must be preceded by the device listen address before that instrument will respond to the command in question. Note that only the addressed device will respond to these commands. Both the commands and the address preceding it are sent with ATN true.

SDC (Selective Device Clear) — The SDC command performs essentially the same function as the DCL command except that only the addressed device responds. Generally, instruments return to their power-up default conditions when responding to the SDC command.

GTL (Go To Local) — The GTL command is used to remove instruments from the remote mode. With some instruments, GTL also unlocks front panel controls if they were previously locked out with the LLO command.

GET (Group Execute Trigger) — The GET command is used to trigger devices to perform a specific action that depends on device configuration (for example, take a reading). Although GET is an addressed command, many devices respond to GET without addressing.

Address commands

Addressed commands include two primary command groups and a secondary address group. ATN is true when these commands are asserted. The commands include:

LAG (Listen Address Group) — These listen commands are derived from an instrument's primary address and are used to address devices to listen. The actual command byte is obtained by ORing the primary address with $20.

TAG (Talk Address Group) — The talk commands are derived from the primary address by ORing the address with $40. Talk commands are used to address devices to talk.

SCG (Secondary Command Group) — Commands in this group provide additional addressing capabilities. Many devices (including the Model 6485) do not use these commands.

Unaddress commands

The two unaddress commands are used by the controller to remove any talkers or listeners from the bus. ATN is true when these commands are asserted.

UNL (Unlisten) — Listeners are placed in the listener idle state by the UNL command.

UNT (Untalk) — Any previously commanded talkers will be placed in the talker idle state by the UNT command.

Common commands

Common commands are commands that are common to all devices on the bus. These commands are designated and defined by the IEEE-488.2 standard.

Generally, these commands are sent as one or more ASCII characters that tell the device to perform a common operation, such as reset. The IEEE-488 bus treats these commands as data in that ATN is false when the commands are transmitted.

SCPI commands

SCPI commands are commands that are particular to each device on the bus. These commands are designated by the instrument manufacturer and are based on the instrument model defined by the Standard Commands for Programmable Instruments (SCPI) Consortium's SCPI standard.

Generally, these commands are sent as one or more ASCII characters that tell the device to perform a particular operation, such as setting a range or closing a relay. The IEEE-488 bus treats these commands as data in that ATN is false when the commands are transmitted.

Command codes

Command codes for the various commands that use the data lines are summarized in Table F-2. Hexadecimal and the decimal values for the various commands are listed in Table F-3.

Table F-3
Hexadecimal and decimal command codes

Command	Hex value	Decimal value
GTL	01	1
SDC	04	4
GET	08	8
LLO	11	17
DCL	14	20
SPE	18	24
SPD	19	25
LAG	20-3F	32-63
TAG	40-5F	64-95
SCG	60-7F	96-127
UNL	3F	63
UNT	5F	95

Typical command sequences

For the various multiline commands, a specific bus sequence must take place to properly send the command. In particular, the correct listen address must be sent to the instrument before it will respond to addressed commands. Table F-4 lists a typical bus sequence for sending the addressed multiline commands. In this instance, the SDC command is being sent to the instrument. UNL is generally sent as part of the sequence to ensure that no other active listeners are present. Note that ATN is true for both the listen command and the SDC command byte itself.

Table F-4
Typical bus sequence

Step	Command	ATN state	Data bus		
			ASCII	Hex	Decimal
1	UNL	Set low	?	3F	63
2	LAG*	Stays low	.	2E	46
3	SDC	Stays low	EOT	04	4
4		Returns high			

*Assumes primary address = 14.

Table F-5 gives a typical common command sequence. In this instance, ATN is true while the instrument is being addressed, but it is set high while sending the common command string.

Table F-5
Typical addressed command sequence

Step	Command	ATN state	Data bus		
			ASCII	Hex	Decimal
1	UNL	Set low	?	3F	63
2	LAG*	Stays low	.	2E	46
3	Data	Set high	*	2A	42
4	Data	Stays high	R	52	82
5	Data	Stays high	S	53	83
6	Data	Stays high	T	54	84

*Assumes primary address = 14.

IEEE command groups

Command groups supported by the Model 6485 are listed in Table F-6. Common commands and SCPI commands are not included in this list.

Table F-6
IEEE command groups

HANDSHAKE COMMAND GROUP	
	NDAC = NOT DATA ACCEPTED
	NRFD = NOT READY FOR DATA
	DAV = DATA VALID
UNIVERSAL COMMAND GROUP	
	ATN = ATTENTION
	DCL = DEVICE CLEAR
	IFC = INTERFACE CLEAR
	REN = REMOTE ENABLE
	SPD = SERIAL POLL DISABLE
	SPE = SERIAL POLL ENABLE
ADDRESS COMMAND GROUP	
LISTEN	LAG = LISTEN ADDRESS GROUP
	MLA = MY LISTEN ADDRESS
	UNL = UNLISTEN
TALK	TAG = TALK ADDRESS GROUP
	MTA = MY TALK ADDRESS
	UNT = UNTALK
	OTA = OTHER TALK ADDRESS
ADDRESSED COMMAND GROUP	
	ACG = ADDRESSED COMMAND GROUP
	GTL = GO TO LOCAL
	SDC = SELECTIVE DEVICE CLEAR
STATUS COMMAND GROUP	
	RQS = REQUEST SERVICE
	SRQ = SERIAL POLL REQUEST
	STB = STATUS BYTE
	EOI = END

Interface function codes

The interface function codes, which are part of the IEEE-488 standards, define an instrument's ability to support various interface functions and should not be confused with programming commands found elsewhere in this manual. The interface function codes for the Model 6485 are listed in Table F-7.

Table F-7
Model 6485 interface function codes

Code	Interface function
SH1	Source Handshake capability
AH1	Acceptor Handshake capability
T5	Talker (basic talker, talk-only, serial poll, unaddressed to talk on LAG)
L4	Listener (basic listener, unaddressed to listen on TAG)
SR1	Service Request capability
RL1	Remote/Local capability
PP0	No Parallel Poll capability
DC1	Device Clear capability
DT1	Device Trigger capability
C0	No Controller capability
E1	Open collector bus drivers
TE0	No Extended Talker capability
LE0	No Extended Listener capability

The codes define Model 6485 capabilities as follows:

SH (Source Handshake Function) — SH1 defines the ability of the instrument to initiate the transfer of message/data over the data bus.

AH (Acceptor Handshake Function) — AH1 defines the ability of the instrument to guarantee proper reception of message/data transmitted over the data bus.

T (Talker Function) — The ability of the instrument to send data over the bus to other devices is provided by the T function. Instrument talker capabilities (T5) exist only after the instrument has been addressed to talk.

L (Listener Function) — The ability for the instrument to receive device-dependent data over the bus from other devices is provided by the L function. Listener capabilities (L4) of the instrument exist only after it has been addressed to listen.

SR (Service Request Function) — SR1 defines the ability of the instrument to request service from the controller.

RL (Remote-Local Function) — RL1 defines the ability of the instrument to be placed in the remote or local modes.

TE (Extended Talker Function) — The instrument does not have extended talker capabilities (TE0).

LE (Extended Listener Function) — The instrument does not have extended listener capabilities (LE0).

E (Bus Driver Type) — The instrument has open-collector bus drivers (E1).

G
IEEE-488 and SCPI Conformance Information

Introduction

The IEEE-488.2 standard requires specific information about how the Model 6485 implements the standard. Paragraph 4.9 of the IEEE-488.2 standard (Std 488.2-1987) lists the documentation requirements. Table G-1 provides a summary of the requirements and provides the information or references the manual for that information. Table G-2 lists the coupled commands used by the Model 6485.

The Model 6485 complies with SCPI version 1991.0. Table 14-1 through Table 14-8 list the SCPI confirmed commands and the non-SCPI commands implemented by the Model 6485.

Table G-1
IEEE-488 documentation requirements

	Requirements	Description or reference
(1)	IEEE-488 Interface Function Codes.	See Appendix F.
(2)	Behavior of 6485 when the address is set outside the range 0-30.	Cannot enter an invalid address.
(3)	Behavior of 6485 when valid address is entered.	Address changes and bus resets.
(4)	Power-On Setup Conditions.	Determine by :SYSTem:POSetup (Section 14).
(5)	Message Exchange Options:	
(a)	Input buffer size.	2048 bytes.
(b)	Queries that return more than one response message unit.	None.
(c)	Queries that generate a response when parsed.	All queries (Common Commands and SCPI).
(d)	Queries that generate a response when read.	None.
(e)	Coupled commands.	See Table G-2.
(6)	Functional elements required for SCPI commands.	Contained in SCPI command subsystems tables (see Table 14-1 through Table 14-8).
(7)	Buffer size limitations for block data.	Block display messages: 12 characters max.
(8)	Syntax restrictions.	See Programming Syntax in Section 10.
(9)	Response syntax for every query command.	See Programming Syntax in Section 10.
(10)	Device-to-device message transfer that does not follow rules of the standard.	None.
(11)	Block data response size.	See Display Subsystem in Section 14.
(12)	Common Commands implemented by 6485.	See Common Commands in Section 12.
(13)	Calibration query information.	Section 14.
(14)	Trigger macro for *DDT.	Not applicable.

Table G-1 (continued)
IEEE-488 documentation requirements

	Requirements	Description or reference
(15)	Macro information.	Not applicable.
(16)	Response to *IDN (identification).	See Common Commands in Section 12.
(17)	Storage area for *PUD and *PUD?	Not applicable.
(18)	Resource description for *RDT and *RDT?	Not applicable.
(19)	Effects of *RST, *RCL and *SAV.	See Common Commands in Section 12.
(20)	*TST information.	See Common Commands in Section 12.
(21)	Status register structure.	See Status Structure in Section 11.
(22)	Sequential or overlapped commands.	All are sequential except :INIT which is overlapped.
(23)	Operation complete messages.	*OPC, *OPC? and *WAI; see Common Commands in Section 12.

Table G-2
Coupled commands

Sending	Changes	To
CALC2:NULL:ACQ	CALC2:NULL:OFFS <n>	Acquired value
TRAC:POIN <n>	TRAC:FEED:CONT <name>	NEV
TRAC:CLE	TRAC:FEED:CONT <name> TRAC:CLE	NEV

GPIB 488.1 Protocol

The Model 6485 supports two GPIB protocols: SCPI (488.2) and 488.1. The 488.1 protocol is included to significantly increase speed over the GPIB.

When using the 488.1 protocol, throughput is enhanced up to 10 times for data sent to the 6485 (command messages) and up to 20 times for data returned by the Picoammeter (response messages). The speed of readings sent over the GPIB is also increased.

NOTE *With the 488.1 protocol selected, you will still use SCPI commands to program the 6485. Operation differences between the two protocols are discussed in this appendix.*

Selecting the 488.1 protocol

Perform the following steps to select the 488.1 protocol:

NOTE *The 6485 must be set up to be remotely controlled over the GPIB to select the 488.1 protocol. SCPI language is the only language available over the RS-232 bus. To setup to use GPIB from the local measurement mode:*
-Press the COMM button
-Using the ▲ or ▼ range keys, select GPIB.
-Press Enter to complete the change.

1. Press CONFIG (CONFIGURE: will be displayed).
2. Press COMM to access the communications menu. If a BAUD is displayed flashing, the 6485 is configured to use the RS-232 bus. See Note above and change to control over the GPIB.
3. Scroll using ▲ range key until LANG is displayed.
4. Press the ▶ cursor key to place the cursor on the currently selected language (either DDC, SCPI, or 488.1 will be flashing).
5. Scroll using ▲ range key until 488.1 is displayed. To change back to 488.2, scroll to the SCPI menu item.
6. Press ENTER to save the change.

When switching between the SCPI protocol, DDC protocol, and 488.1 protocol, the instrument resets. The GPIB protocol setting is saved in EEPROM, and the unit will power up with that selected protocol.

The GPIB protocol cannot be changed over the bus. However, there is a query command to determine the presently selected protocol. When the 488.1 protocol is selected, the message exchange protocol (MEP) disables. Therefore, if you use the following query to request the state of MEP, you will know which protocol is enabled:

:SYSTem:MEP[:STATe]?

If a “1” is returned, MEP is enabled, and the SCPI protocol is selected. A “0” indicates that MEP is disabled, and the 488.1 protocol is enabled. To summarize:

1 = SCPI protocol

0 = 488.1 protocol

Protocol differences

The following information covers the differences between the 488.1 protocol and the SCPI protocol.

Message exchange protocol (MEP)

When the 488.1 protocol is selected, the MEP is disabled to speed up GPIB operation.

The following guidelines/limitations must be followed when using the 488.1 protocol:

- If a query is sent, it must be the only command on the line (this limitation also means no multiple queries can be sent). Otherwise, full SCPI command syntax is still supported including long-form and short form commands, multiple commands, and MIN/MAX/DEF parameter definitions.

  For example, the following command strings are invalid:

  ```
  :CURR:RANG .020; *OPC?
  :CURR:RANG?;: READ?
  :READ?;:READ?
  ```

  The following strings are valid:

  ```
  curr:nplc 1.0;:curr:rang min
  :CURR:RANG? MAX
  :READ?
  ```

- When a query is sent, either the data must be read back or a Device Clear (DCL) or Interface Clear (IFC) must be performed to reset the query.
- When sending a command or query, do not attempt to read data from the 6485 until the terminator has been sent (usually Line Feed with EOI). Otherwise, a DCL or IFC must be sent to reset the input parser.
- When receiving data, all data, up to and including the terminator (LF with EOI), must be accepted. Otherwise, a DCL or IFC must be sent to reset the output task.
- Empty command strings (terminator only) should not be sent.

Using SCPI-based programs

In general, an existing SCPI-based program will run properly and faster in the 488.1 protocol as long as it meets the above guidelines and limitations.

NRFD hold-off

*OPC, *OPC?, and *WAI are still functional but are not needed for the 488.1 protocol. When sending commands, the GPIB is automatically held off when it detects a terminator. The hold-off is released when all the commands have finished executing, or if there is some parser or command error. An exception is an initiate command, which releases the hold-off immediately and does not wait for all of the readings to be acquired. This immediate release of bus hold-off is done to support GET, SDC, IFC, *TRG, *RCL, *RST, SYSTem:PRESet, and ABORt during data acquisition.

NDAC hold-off

NDAC hold-off is included with the GPIB 488.1 protocol mode to allow a single instrument to hold off all others on the bus until it is finished executing a command. The following command controls NDAC hold-off:

```
SYSTem:MEP:HOLDoff ON | OFF
```

The default is OFF, but NRFD hold-off will still be enabled and will prevent an instrument from accepting further commands. See Figure G-1 for the complete IEEE-488 handshake sequence.

Figure G-1
IEEE-488 handshake sequence

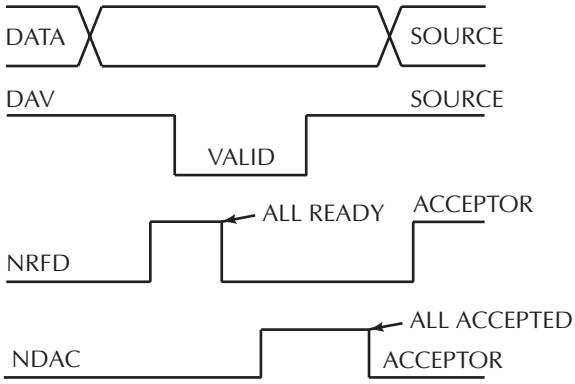

Trigger-on-talk

Trigger-on-talk functionality has been added for the 488.1 protocol. If a query has not been received by the instrument, the 6485 will automatically assume a READ? command has been sent when it is addressed to talk. This technique increases GPIB speed by decreasing the transmission and parser times for the command.

Trigger-on-talk is extremely useful in the single-shot reading mode (*RST default) and is the main reason for a >2x speed improvement over the SCPI protocol.

The ARM:SOUR BUS and ARM:COUN INF commands are not supported by READ? with the 488.1 protocol selected. If you send one of these commands, a DCL or IFC may be required to reset the GPIB.

Message available

The MAV (message available) bit in the Serial Poll byte will be set when the query is finished being processed, not when there is data available in the output buffer (as with the SCPI protocol). For the 488.1 protocol, output data will not be formatted until the first request for data is received. This delay may cause unexpected time-outs when using SRQ on MAV for queries that take a long time to execute.

General operation notes

- The TALK, LSTN, and SRQ annunciators are not functional in the 488.1 protocol. This speeds up data throughput greatly. The REM annunciator still operates since it is critical to fundamental GPIB operation.
- If the unit is in REMote, the GTL command may not put the 6485 into the local mode. Only the front panel LOCAL key is guaranteed to operate, if not in local lockout (LLO). GTL will still disable LLO.
- IEEE-488 bus commands and features (GET, IFC, SDC, DCL, LLO, Serial Poll, and SRQ) are still fully supported.
- Multiple TALKs on the same query are supported as in the SCPI protocol. This feature is useful when reading back long ASCII strings.

SRQ when buffer fills with 200 readings

The following QuickBasic program (Figure G-2) will store 200 readings in the buffer. When the buffer fills to the set amount (200 readings), an SRQ will occur and a message will be displayed on the computer to indicate the event.

Figure G-2
Program example

```
' $INLCUDE: 'ieeeqb.bi'

CLS                                                                 'Clear PC output screen
CONST addr = 14                                                     'Set instrument address

'
' Init GPIB
'

CALL initialize(21, 0)
CALL transmit("unt unl listen " + STR$(addr) + " sdc unl", status%)  'Restore *rst defaults
CALL send(addr, "*rst", status%)                                    'Send Device Clear
CALL send(addr, "trac:cle", status%)'Clear buffer
CALL send(addr, "trig:coun 200", status%)                           '200 trigger count
CALL send(addr, "trac:poin 200", status%)                           'Set buffer size to 200
CALL send(addr, "trac:feed:cont next", status%)                     'Enable buffer
CALL send(addr, "stat:pres", status%)                               'Reset measure enable bits
CALL send(addr, "*cls", status%)                                    'Clear all event registers
CALL send(addr, "stat:meas:enab 512", status%)                      'Enable buffer bit B9
CALL send(addr, "*ese 0", status%)                                  'Disable standard events
CALL send(addr, "*sre 1", status%)                                  'Enable measurement events
CALL send(addr, "init", status%)                                    'Start measurement/store process

WAITSRQ:
    WHILE srq = 0:WEND                                              'Wait for GPIB SRQ line to go true.
    CALL spoll(addr, poll%, status%)                                'Clear rqs/mss bit in status bit
                                                                    'register
    CALL send(addr, "*cls", status%)                                'Clear all event registers
    PRINT "BUFFER FULL"                                             'Display buffer full message.
END
```

H
Remote Calibration

- **Calibration commands** — Summarizes those commands necessary to calibrate the Model 6485 by remote.
- **Remote calibration overview** — Gives an overview of the basic procedure for calibrating the Model 6485 via remote.

Introduction

This appendix contains a summary of Model 6485 remote calibration commands, and a basic remote calibration procedure. See "*Section 16*" for complete calibration information.

Calibration commands

Table H-1 summarizes Model 6485 remote calibration commands.

Table H-1
Calibration commands

Command	Description
:CALibration	Calibration subsystem.
:PROTected	Commands protected by code/password.
:CODE '<code>'	Eight character code/password used to enable or unlock calibration. (Default: KI006485.)
:CODE?	Calibration code query.
:LOCK	Lock out further calibration.
:LOCK?	Return 1 if calibration is locked, 0 otherwise.
:SENSe <NRf>	Calibrate active current range.
:DATA?	Query measurement cal constants.
:SAVE	Save all calibration data to non-volatile memory.
:DATE <yyyy, mm, dd>	Year, Month, Day when cal was last performed.
:DATE?	Query last cal date.
:NDUE <yyyy, mm, dd>	Year, Month, Day when 6485 is due for re-cal.
:NDUE?	Query cal due date.
:COUNt?	Returns how many times 6485 has been calibrated.
:UNPRotected	Commands not protected by code/password.
:VOFFset	Voltage offset correction.

Remote calibration overview

The steps below outline the general procedure for calibrating the Model 6485 using remote commands. Refer to "Section 16" for details on calibration steps, calibration points, and test equipment connections.

1. Send the following command to unlock calibration:
   :CAL:PROT:CODE 'KI006485'
   Note that the above command uses the factory default code.
2. Perform voltage offset correction by sending the following command:
   :CAL:UNPR:VOFF
   Be sure a BNC shielding cap is connected to the INPUT jack before sending the above command.
3. Send the appropriate command to select the range to be calibrated. For example, the following command selects the 20mA range:
   :SENS:CURR:RANG 2e-2
4. Make appropriate connections, then send the commands for each calibration point for the selected function and range. For example, send the following commands for the 20mA range:
   :CAL:PROT:SENS 0
   :CAL:PROT:SENS 2e-2
   :CAL:PROT:SENS –2e-2

NOTE *Be sure the appropriate calibration signal is applied to the INPUT jack before sending the command for each calibration point. See "Section 16" for details.*

5. Repeat steps 3 and 4 for each range (Table H-2).
6. After all ranges are calibrated, send the commands to program the calibration dates; for example:
   :CAL:PROT:DATE 2001,12,15
   :CAL:PROT:NDUE 2002,12,15
7. Finally, send the following commands to save calibration constants and then lock out calibration:
   :CAL:PROT:SAVE
   :CAL:PROT:LOCK

Table H-2
Calibration commands by range

Range	Commands*
2nA	:SENS:CURR:RANG 2e-9 :CAL:PROT:SENS 0 :CAL:PROT:SENS 2e-9 :CAL:PROT:SENS –2e-9
20nA	:SENS:CURR:RANG 2e-8 :CAL:PROT:SENS 0 :CAL:PROT:SENS 2e-8 :CAL:PROT:SENS –2e-8
200nA	:SENS:CURR:RANG 2e-7 :CAL:PROT:SENS 0 :CAL:PROT:SENS 2e-7 :CAL:PROT:SENS –2e-7
2µA	:SENS:CURR:RANG 2e-6 :CAL:PROT:SENS 0 :CAL:PROT:SENS 2e-6 :CAL:PROT:SENS –2e-6
20µA	:SENS:CURR:RANG 2e-5 :CAL:PROT:SENS 0 :CAL:PROT:SENS 2e-5 :CAL:PROT:SENS –2e-5
200µA	:SENS:CURR:RANG 2e-4 :CAL:PROT:SENS 0 :CAL:PROT:SENS 2e-4 :CAL:PROT:SENS –2e-4
2mA	:SENS:CURR:RANG 2e-3 :CAL:PROT:SENS 0 :CAL:PROT:SENS 2e-3 :CAL:PROT:SENS –2e-3
20mA	:SENS:CURR:RANG 2e-2 :CAL:PROT:SENS 0 :CAL:PROT:SENS 2e-2 :CAL:PROT:SENS –2e-2

* Full-scale calibration values for 2nA to 2µA ranges should be calculated from calibrator voltages and standard resistance values. (See Section 16.) Values for 20µA to 20mA ranges can be used as shown.

I Applications Guide

- **Measurement considerations** — Covers measurement considerations for low current measurements including Leakage currents and guarding, Input bias current, Voltage burden, Noise and source impedance, Electrostatic interference and shielding, and also Making connections.
- **Applications** — Covers applications to measure Diode leakage current, Capacitor leakage current, Measuring high resistance with external bias source, Cable insulation resistance, Surface insulation resistance (SIR), Photodiode characterization prior to dicing, Focused ion beam applications and Using switching systems to measure multiple current sources as shown in "External triggering," page 7-11.

Measurement considerations

Some considerations for making accurate amps measurements are summarized as follows. Additional measurement considerations are covered in Appendix C. For comprehensive information on precision measurements, refer to the Low Level Measurements handbook, which is available from Keithley Instruments.

It is critical that the picoammeter perform the measurement without interfering with the flow of current in the circuit, possibly affecting operation or inducing additional errors. Voltage burden is the terminal voltage of a picoammeter, and ideally this voltage should be zero (no resistive effect). Some meters, such as DMMs, utilize a shunt resistor to measure the voltage drop across a known resistance, and a typical burden of 200mV is not unusual.

The Keithley 6485 uses an alternative approach referred to as a feedback picoammeter, where the voltage burden is simply the input voltage of an operational amplifier. Furthermore, since the input voltage of the operational amplifier is the output voltage divided by the gain (typically 500,000) the voltage burden is in the microvolt range.

Leakage currents and guarding

Leakage currents are generated by high resistance paths between the measurements circuit and nearby sources. These currents can considerably degrade the accuracy of low current, measurements. Some ways to reduce leakage currents are to use good quality insulators, reduce humidity, and use guarding. Guarding can also be used to reduce the effect of shunt capacitance in the measurement circuit.

One way to reduce leakage currents is to use good quality insulators when building the test circuit. Some good quality insulators are Teflon, polyethylene, and sapphire. Avoid materials such as phenolics and nylon. Refer to Keithley's Low Level Handbook for additional information on choosing the best insulator.

Humidity may also degrade low current measurements. The amount of water an insulator absorbs will vary depending upon the insulator. It is best to choose an insulator on which water vapor does not readily form a continuous film. Sometimes this is unavoidable if the material being measured absorbs water easily, so it is best to make the measurements in an environmentally controlled room. In some cases, an insulator may have ionic contaminants and, especially in high humidity, a spurious current may be generated.

Another way to reduce leakage currents is to use guarding. A guard is a conductor connected to a low impedance point in the circuit that is nearly at the same potential as the high impedance lead being guarded. Guarding can isolate the high-impedance input lead of the picoammeter from leakage current due to voltage sources.

Guarding may also be necessary to prevent leakage current due to text fixturing. Figure I-1 shows a high-megohm resistor supported on two insulators mounted in a metal test fixture. This circuit is guarded by connecting the LO of the picoammeter (A) to the metal case. This will put the top of the right insulator at almost the same potential as the bottom. The

voltage difference is equal to the voltage burden of the picoammeter. Since the top and the bottom of the insulator are at nearly the same potential, no significant current will flow through it, and nearly all the current from the device under test will flow through the picoammeter as well.

Figure I-1
Guarding to reduce leakage currents

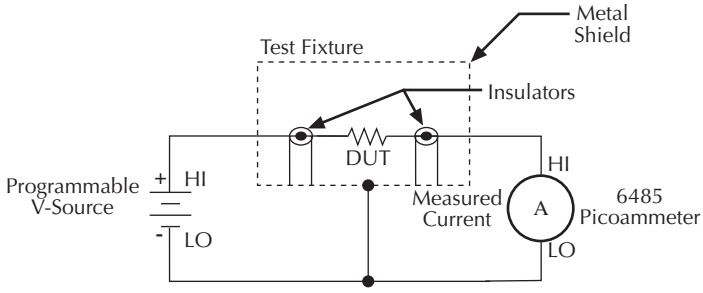

Equivalent Circuit

Input bias current

An ideal picoammeter would read 0A with an open input. In practice, however, ammeters do have some current that flows when the input is open. This current is known as the input bias (offset) current and may be large enough to corrupt low current measurements. The input bias current for Model 6485 is included in the offset portion of the accuracy specification.

Voltage burden

The input resistance of the picoammeter causes a small voltage drop across the input terminals. This voltage is known as the voltage burden. If the voltage burden is large in relation to the voltage of the measured circuit, then significant measurement errors will occur.

Refer to Figure I-2 to see how voltage burden affects current measurements. Assume V_S is 5mV and R_S is 5kΩ to configure a 1µA current source (5mV/5kΩ = 1µA). An ideal picoammeter with zero voltage burden would allow 1µA to flow and measure it accurately.

In practice however, every picoammeter has a voltage burden. If the voltage burden (V_B) is 1mV, the current that flows will be:

$$I_M = \frac{V_S - V_B}{R_S} = \frac{5mV - 1mV}{5k\Omega} = 0.8\mu A$$

The 1mV voltage burden caused a 20% current reduction. Percent error in a measured reading (I_M) due to voltage burden can be calculated as follows:

$$I_M\%\ \text{error} = \frac{100\%}{(V_S/V_B)}$$

The voltage burden of Model 6485 depends on the selected range (see specifications). Voltage burden may be reduced by performing the voltage offset correction procedure.

Voltage offset correction procedure

NOTE *To maintain specified operation, any time there is a substantial change in the ambient temperature, the voltage offset procedure should be performed and saved.*

1. Press the MENU key to display the following:

   `CAL: VOFFSET`

2. Press ENTER. The instrument will prompt as follows:

   `INPUT CAP`

3. It is not necessary to disconnect signal cables from the 6485, but it is recommended that signal currents be reduced to zero if possible. During the calibration, the input impedance will be 3.5MΩ, therefore continued signal currents will present a corresponding voltage to the DUT.
4. Press ENTER to complete offset voltage calibration.
5. Press EXIT to return to normal display.

NOTE *Like the other calibration procedures, this calibration is not permanently stored until CAL:UNLOCK and CAL:SAVE have been performed. Saving the results of this calibration at a temperature other than that at which the Model 6485 will be used will adversely affect measurement results.*

Figure I-2
Voltage burden considerations

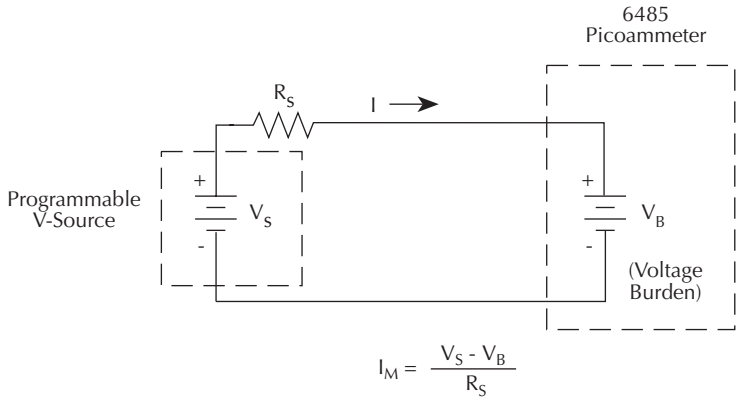

Noise and source impedance

Noise can seriously affect sensitive current measurements. The following paragraphs discuss how source resistance and input capacitance affect noise performance.

Source resistance

The source resistance of the DUT will affect the noise performance of current measurements. As the source resistance is reduced, the noise gain of the picoammeter will increase, as we will now discuss.

Figure I-3 shows a simplified model of the feedback picoammeter. R_S and C_S represent the source resistance and source capacitance, V_S is the source voltage, and V_{NOISE} is the noise voltage. Finally, R_F and C_F are the feedback resistance and capacitance respectively.

The source noise gain of the circuit can be given by the following equation:

$$\text{Output } V_{NOISE} = \text{Input } V_{NOISE}(1 + R_F/R_S)$$

Note that as R_S decreases in value, the output noise increases. For example, when $R_F = R_S$, the input noise is multiplied by a factor of two. Since decreasing the source resistance can have a detrimental effect on noise performance, there are usually minimum recommended source resistance values based on measurement range. Table I-1 summarizes minimum recommended source resistance values for various measurement ranges. Note that the recommended source resistance varies by measurement range because the R_F value also depends on the measurement range.

Table I-1
Minimum recommended source resistance values

Range	Minimum Recommended Source Resistance
2nA, 20nA	1 MΩ to 1 GΩ
200nA, 2µA	10 kΩ to 10 MΩ
20µA, 200µA	100Ω to 100 kΩ
2mA, 20mA	10Ω to 1kΩ

Figure I-3
Simplified model of a feedback picoammeter

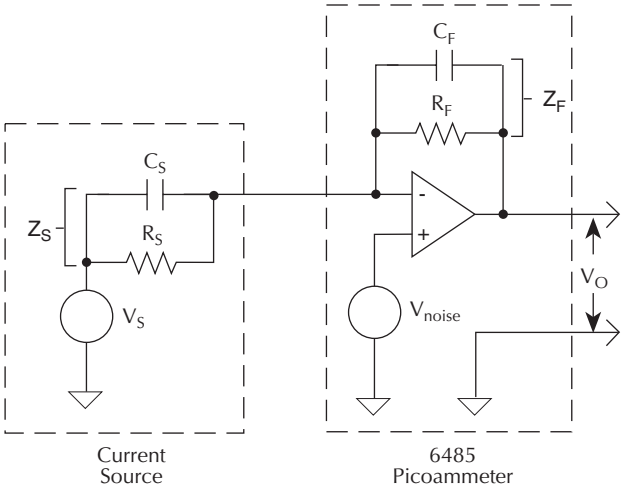

Source capacitance

DUT source capacitance will also affect the noise performance of the Model 6485 picoammeter. In general, as source capacitance increases, the noise also increases. To see how changes in source capacitance can affect noise gain, again refer to the simplified picoammeter model in Figure I-3. The elements of interest for this discussion are the source capacitance, C_S and the feedback capacitance C_F. Taking into account the capacitive reactance of these two elements, the previous noise gain formula must be modified as follows:

$$\text{Output } V_{NOISE} = \text{Input } V_{NOISE}(1 + Z_F/Z_S)$$

Here, Z_F represents the feedback impedance made up of C_F and R_F, while Z_S is the source impedance formed by R_S and C_S. Furthermore,

$$Z_F = \frac{R_F}{\sqrt{[(2\pi f R_F C_F)^2 + 1]}}$$

and,

$$Z_S = \frac{R_S}{\sqrt{[(2\pi f R_S C_S)^2 + 1]}}$$

Note that as C_S increases in value, Z_S decreases in value, thereby increasing the noise gain. Again, at the point where $Z_S = Z_F$, the input noise is amplified by a factor of two.

The maximum value of source capacitance (C_S) for the lower ranges of the Model 6485 picoammeter is 10,000pF. You can, however, usually measure at higher source capacitance values by inserting a resistor in series with the picoammeter input, but remember that any series resistance will increase the voltage burden by $I_{IN} \bullet R_{SERIES}$. For example, the range of resistance listed in Table I-1 will result in voltage burden values in range of 2mV to 2V. A useful alternative to a series resistor is a series diode, or two diodes in parallel back-to-back. The diodes can be small-signal types and should be in a light-tight enclosure.

Electrostatic interference and shielding

Electrostatic interference is probably the most common source of error when making low current measurements. Electrostatic coupling or interference occurs when an electrically charged object is brought near an uncharged object. At low impedance levels, the effect of the interference are not noticeable because the charge dissipates rapidly. However, high resistance materials do not allow the charge to decay quickly, which may result in unstable measurements. The erroneous readings may be due to either DC or AC electrostatic fields, so electrostatic shielding will help minimize the effects of these fields.

DC fields can produce noisy readings or undetected errors. These fields can be detected when movement near an experiment (such as the movement of the person operating the instrument or others in the immediate vicinity) causes fluctuations on the picoammeter's display. To perform a quick check for interference, place a piece of charged plastic, such as a comb, near the circuit. A large change in the meter reading indicates insufficient shielding.

AC fields can be equally troublesome. These are caused most often by power lines and RF fields. If the AC voltage at the input is large, part of this signal is rectified, producing an error in the DC signal being measured. This can be checked by observing the analog output of the picoammeter with an oscilloscope. A clipped waveform indicates a need to improve electrostatic shielding.

Figure I-4 shows an example of AC electrostatic coupling. An electrostatic voltage source in the vicinity of a conductor, such as a cable or trace on a PC board, generates a current proportional to the rate of change of the voltage and of the coupling capacitance. This current can be calculated with the following equation:

$$i = C\frac{dV}{d} + V\frac{dC}{dt}$$

Figure I-4
Electrostatic coupling

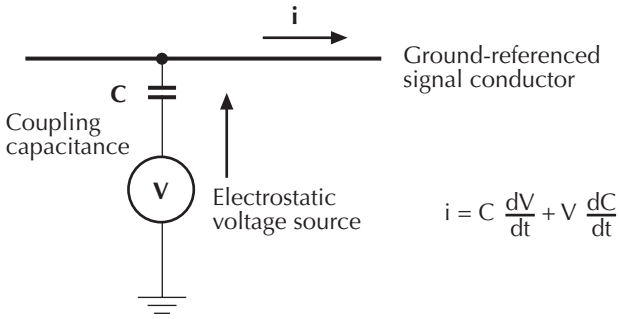

For example, two conductors, each with $1cm^2$ area and spaced 1cm apart by air, will have almost 0.1pF of capacitance. With a voltage difference of 100V and a vibration causing a change of capacitance of 0.01pF/second (a 10% fluctuation), a current of 1pA will be generated.

To reduce the effects of the fields, a shield can be built to enclose the circuit being measured. The easiest type of shield to make is a simple metal box or meshed screen that encloses the test circuit. Shielded boxes are also available commercially.

Figure I-5 illustrates an example of shielding. Made from a conductive material, the shield is always connected to the low impedance input of the electrometer or picoammeter. If circuit low is floating above ground, observe special safety precautions to prevent anyone from touching the shield. (See "Floating measurements," page 2-12.)

Figure I-5
Shielding a high impedance device

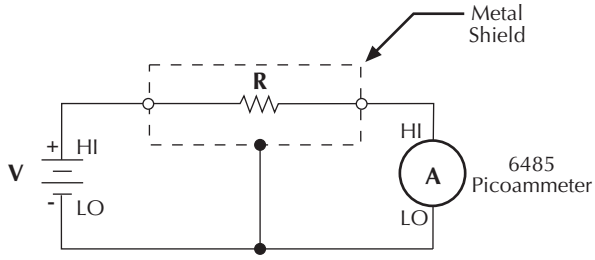

The cabling in the circuit also requires shielding. Capacitive coupling between an electrostatic noise source and the signal conductors or cables can be greatly reduced by surrounding those conductors with a grounded metal shield, as shown in Figure I-6. With this shield in place, the noise current generated by the electrostatic voltage source and the coupling capacitance flows through the shield to ground rather that through the signal conductors.

Figure I-6
Electrostatic shielding

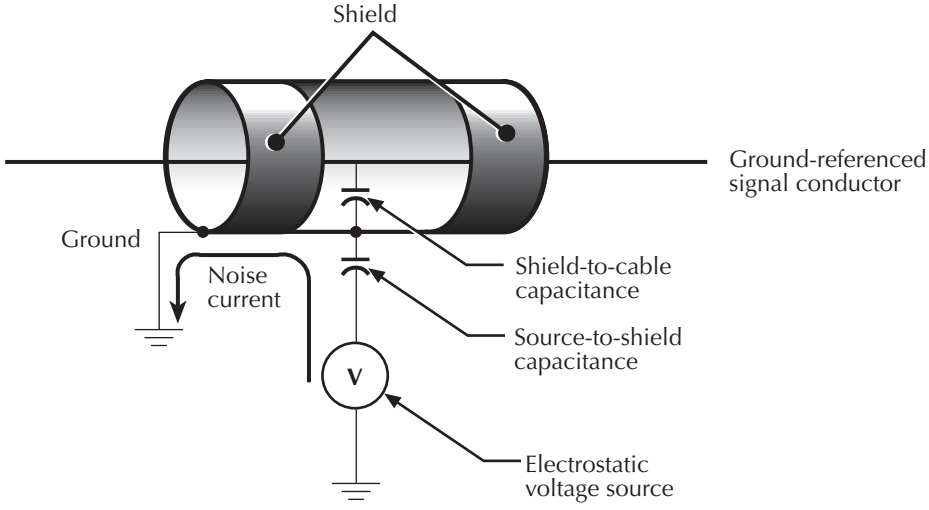

To summarize, error currents due to electrostatic coupling can be minimized by following these guidelines:

- Keep all charged objects (including people) and conductors away from sensitive areas of the test circuit.
- Avoid movement and vibration near the test area.
- When measuring currents <1nA, shield the device under test by surrounding it with a metal enclosure and connect the enclosure electrically to the test circuit common terminal.

Shielding vs. Guarding

Shielding usually implies the use of a metallic enclosure to prevent electrostatic interference from affecting a high impedance circuit. Guarding implies the use of an added low impedance conductor, maintained at the same potential as the high impedance circuit, which will intercept any interfering voltage or current. A guard does not necessarily provide shielding. ("Leakage currents and guarding," page I-2.)

Making connections

To avoid measurement errors, it is critical to make proper connections from the picoammeter to the device under test. To make a proper connection, **always connect the high resistance terminal of the meter to the highest resistance point of the circuit under test.**

Figure I-7 shows a picoammeter connected to a current source that consists of a voltage source in series with a resistor. An AC powered voltage source usually has a significant level (often several volts) of line frequency common mode voltage.

Figure I-7
Connecting the HI terminal (picoammeter) to high resistance

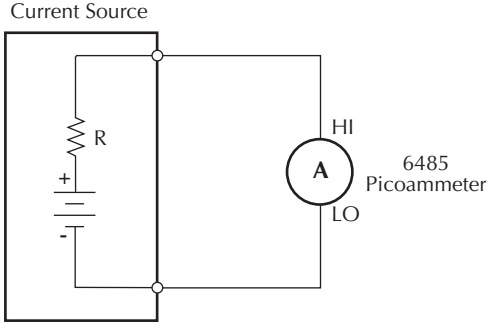

As shown in Figure I-8, this will cause a current (i) to flow through the low to ground capacitance of the picoammeter (A). Picoammeter HI is connected to the highest resistance side of the circuit being measured, the “R” side of this current source. This circuit is connected properly, so this current does not flow through the picoammeter and, therefore, does not cause any measurement errors.

Figure I-8
Proper connection

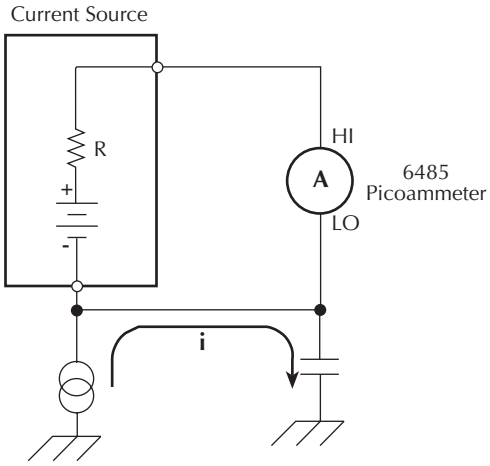

However, when the HI of the picoammeter is connected to the low impedance power supply, this AC current (i) flows through the picoammeter (A) as illustrated in Figure I-9. This current may affect the measurement accuracy, especially at low signal levels.

Figure I-9
Improper connection

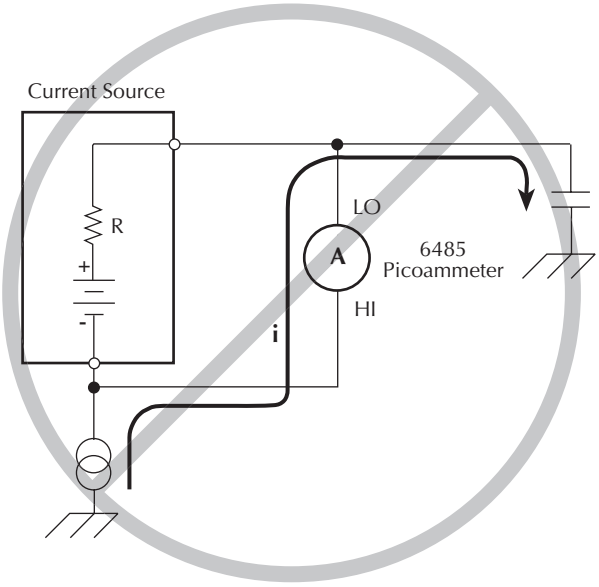

Refer to "Input cables, connectors, and adapters," page 1-4 for details on appropriate types of cabling and connectors to use when making picoammeter measurements.

Typical range change transients

During a range change, a picoammeter cannot perfectly maintain its voltage burden specification. When a range change occurs, the picoammeter will momentarily become a current-limited voltage source, as shown in Figure I-10.

Figure I-10
Range change voltage transients

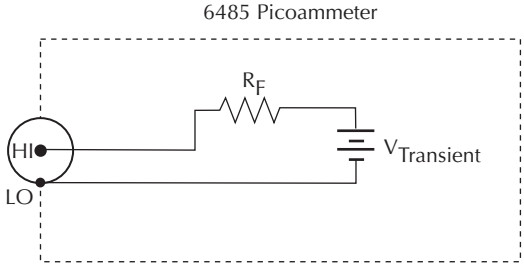

Range being changed to:	R_F
2mA, 20mA	500Ω
20µA, 200µA	50kΩ
200nA, 2µA	5MΩ
2nA, 20nA	500MΩ

NOTE *The current that can be inadvertently delivered to the DUT is limited by an internal resistance. This internal resistance varies as the range is changed. For example, manually up-ranging from 2µA to the 20µA range can never deliver more than 10V/50kΩ = 200µA to the DUT. This current will be further limited by any impedance of the DUT.*

Up-range input response

Figure I-11 illustrates the type of transient voltage that can be expected when up-ranging with a full-scale input signal (200µA signal on 200µA range, up-range to 2mA range). Both the magnitude and duration of this voltage are reduced for lower current ranges. The current limit imposed by the R_F is also greatly reduced. The polarity depends on the polarity of the input current. Figure I-11 was measured with a positive input current.

Figure I-11
Transient Voltage

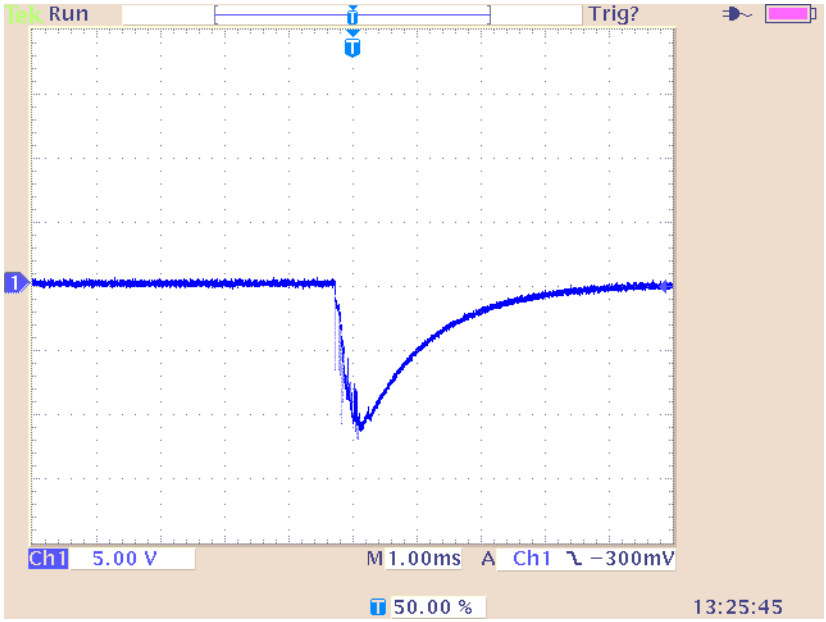

When it is necessary to up-range during auto-ranging operation, multiple ranges may be crossed to find the correct range. The duration of the transient in Figure I-11 can be extended in this case, but the magnitude will not increase significantly.

Down-range voltage transients are smaller

With the exception of the change from the 2mA range to the 200µA range, the down-range voltage transient is significantly smaller than the up-range transients. Figure I-12 shows the voltage presented at the input, measured during a change from 20µA to 2µA with a 2µA input current. The vast difference from the previous figures in voltage scale and time scale should be noted. Note also that the current limiting resistor will be that of the 2µA range, 100 times greater than upranging across the same boundary. The voltage transient of the 2mA to 200µA change with a 200µA input signal is similar to the up-range response, with the exception that the current limiting R will be 100 times greater in the case of down-ranging.

Figure I-12
Down-range voltage transients

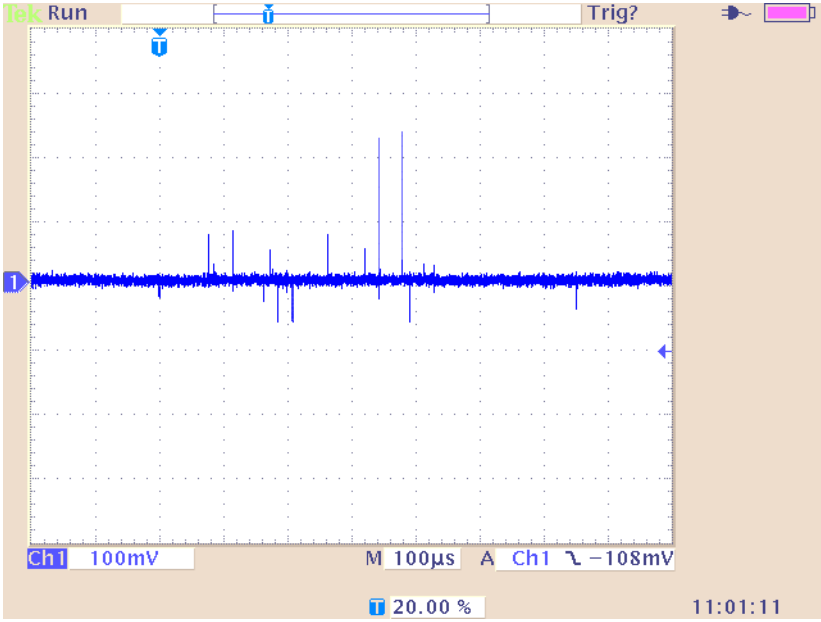

Steps to minimize impact of range change transients

When changing between the following range pairs (up or down), no input transients occur: 2nA and 20nA; 200nA and 2µA; 20µA and 200µA; 2mA and 20mA. This is not true when auto-ranging upwards across these boundaries.

Run test with a fixed range.

If possible, run the test within a fixed range. Choose the higher range from any of the range pairs listed above. Alternatively, the autorange upper limit (:RANGe:AUTO:ULIMit, see "Voltages greater than 220V," page 2-6 or "Autorange limits," page 4-3 can be set so that the internal limiting resistor (R_F) cannot be reduced to the lower values. Choose the appropriate range to accommodate the maximum current expected during normal measurements.

Down-range by starting at highest current necessary

Make use of down-ranging by starting at the highest current necessary and reducing down to zero, the range change transients can be reduced significantly compared to up-ranging transients.

Using protection circuitry

Using the protection circuitry described in Figure I-13 or on "Voltages greater than 220V," page 2-6 can greatly reduce currents and voltages presented to devices being tested, as well as serving to protect the 6485 from any externally generated transients. The method from Figure I-13 is preferred when measuring nonlinear devices such as transistors, diodes, or photodiodes, as long as the accuracy required during normal measurements is not tighter than 10pA. If using the scheme from "Voltages greater than 220V," page 2-6, size the external current limiting resistor such that the sum of the external resistor and the lowest R_F will limit a 10V transient to a current level acceptable to the DUT.

Reduce up-ranging transient

If the application requires that up-ranging be used, and when the transient through the internal limiting resistor R_F would damage the DUT, the up-ranging transient can be reduced greatly by reducing the input current to <10% of the present range before forcing the range change up (manual, or fixed-ranging over the bus). This can be true when running the first I-V curve on devices whose characteristics are not yet known, so that sweeping from low current towards high current is the only way to avoid exceeding a maximum current through the device.

Zero check on / off response

Figure I-13 shows the transient that can be expected from input HI to LO during a change in the zero check mode with no input current. The transition is similar for entering and leaving zero check. For current ranges 2µA and below, the magnitude of the response is not as large, but similar in duration. As with range change transients, the zero check transient is presented through an internal impedance which will limit the resulting current through the DUT (Table I-2). If there is an input current while in zero check, the input voltage will depend on the current and the zero check input impedance for the specific range.

Figure I-13
Zero check transient

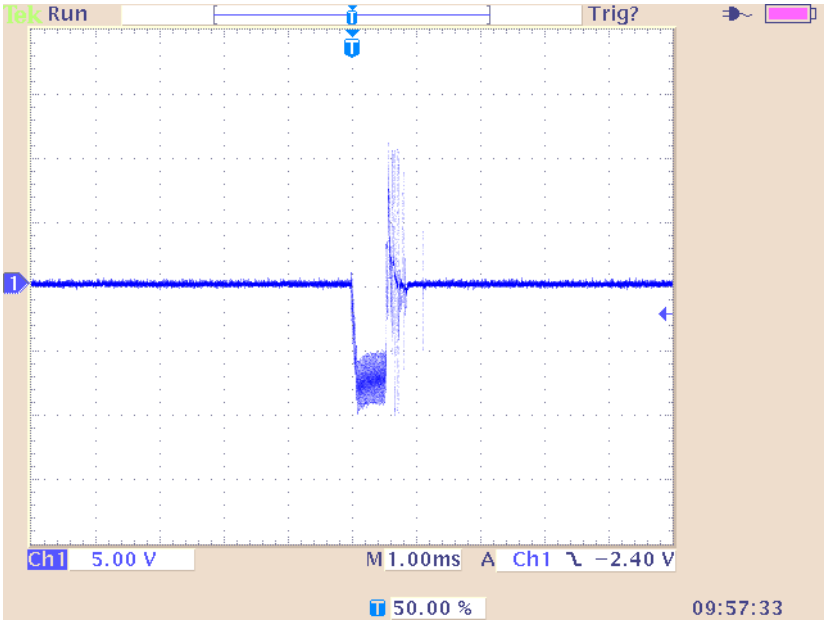

Table I-2
Internal impedance for zero check transient

Range Zcheck	Transient impedance
2mA,20mA	500Ω
20µA,200µA	50kΩ
200nA,2µA	3.5MΩ
2nA,20nA	11MΩ

Applications

The following applications require an external voltage source.

NOTE *External triggering and delay are covered in Section 7.*

With the proper use of external triggering between Models 6485 and voltage source, the tests can be automated. All of the applications require a bias time or delay, which can be provided by the delay feature of Model 6485. When Model 6485 is triggered, a measurement will not be performed until the delay period expires.

Diode leakage current

Figure I-14 shows how to measure the leakage current for a diode. By sourcing a positive voltage, the leakage current through the diode will be measured. Note that if you source a negative voltage, you will forward bias the diode. Resistor R is used to limit current in the event that the diode shorts out or it becomes forward biased. Select a value of R that will limit current to 20mA or less.

A profile for leakage current can be developed by measuring current at various voltage levels. For example, program the voltage source to source from 1 to 10V in 1V steps. With the proper use of external triggering, the Model 6485 performs a current measurement on each voltage step. To ensure that the voltage is settled before each current measurement, you can program Model 6485 for a delay. For example, if you program Model 6485 for a one second delay, each measurement will be performed after the voltage step is allowed to settle for one second. The current measurements can be stored in the buffer.

NOTE *Buffer operation is covered in Section 6.*

Figure I-14
Connections; diode leakage current test

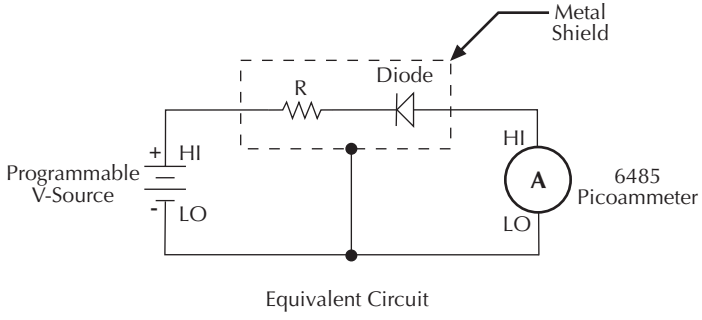

NOTE *The details on page I-12 on range change transients may be particularly relevant to this application.*

Capacitor leakage current

Figure I-15 shows how to measure the leakage current for a capacitor. The magnitude of the leakage is dependent on the type of dielectric and the applied voltage. A resistor and a diode are used to limit noise for the measurement.

For this test, a fixed bias voltage is to be applied to the capacitor for a specified time to allow the capacitor to fully charge (current decays exponentially with time). The leakage current is then measured. After the measurement, the voltage source is set to output 0V for a specified time to allow the capacitor to discharge.

Figure I-15
Connections; capacitor leakage current test

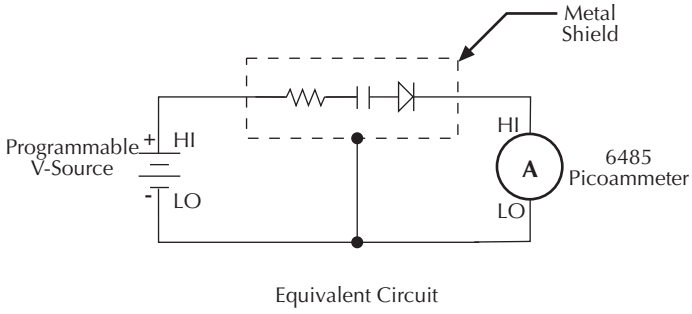

Measuring high resistance with external bias source

The 6485 Picoammeter can be used to make high resistance (>1GΩ) measurements when used with an external voltage source. High resistance measurement applications include insulation resistance testing and resistivity measurements of insulators.

To measure high resistance, a constant voltage source is placed in series with the unknown resistance and the picoammeter. Since the voltage drop across the picoammeter is negligible, essentially all the voltage appears across the unknown resistance. The resulting current is measured by the picoammeter. The resistance is then calculated using Ohm's Law:

$$R = \frac{V}{I}$$

where: V is the sourced test voltage
I is the measured current

The basic configuration for measuring high resistance using the 6485 Picoammeter is shown in Figure I-16. The HI terminal of the 6485 is connected to one end of the unknown resistance (R) and the HI of the voltage source to the other end of the resistance. The LO terminal of the 6485 is connected to the LO terminal of the voltage source. Both LO terminals are also connected to earth ground. This should be done via the ground link on the rear of the 6485.

Figure I-16
Measuring High Resistance Using the 6485

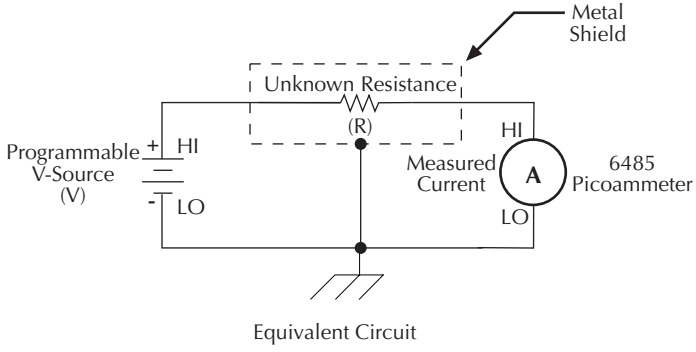

To prevent generated current due to electrostatic interference, place the unknown resistance in a shielded test fixture. The metal shield is connected to the LO terminal of the 6485.

If the voltage source is greater than 220V, a current limiting resistor in series with the 6485 HI terminal as well as protection diodes (IN 3595) across the meter input should be used to prevent damage to the 6485 in the event the unknown resistance breaks down and becomes shorted. The diodes should be in a light-tight enclosure to prevent light induced leakage, A diagram of the overload protection circuit is shown in Figure I-17.

Figure I-17
Overload Protection Circuit for 6485 Picoammeter

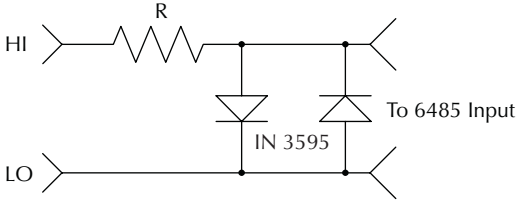

In the case that the source is connected directly across the protection circuit, make sure the series resistance (R) is chosen so the current through the diodes is limited to <100mA. If the current through the unknown resistance must be measured with an accuracy greater than 10pA, use the protective method outlined in "Voltages greater than 220V," page 2-6.

Cable insulation resistance

NOTE *For this test, Model 6485 uses the source voltage, measure current method to determine resistance. Once a current measurement is performed, resistance can be calculated.*

Figure I-18 shows how to measure the insulation resistance of a cable. The resistance of the insulator between the shield and the inner conductor is being measured. The cable sample should be kept as short as possible to minimize input capacitance to the picoammeter.

For this test a fixed bias voltage is applied across the insulator for a specified time to allow the charging effects of cable capacitance to stabilize. The current is then measured. Cable resistance (R) can then be calculated as follows:

$$R = \frac{V}{I}$$

where: V is the sourced bias voltage
I is the measured current

Figure I-18
Connections; cable insulation resistance test

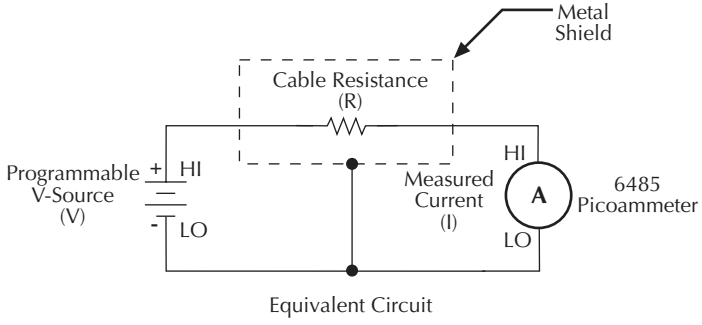

Surface insulation resistance (SIR)

Figure I-19 shows how to measure the insulation resistance between PC board traces. Note that the drawing shows a "Y" test pattern for the measurement. This is a typical test pattern for SIR tests.

A bias voltage (typically 50V) is applied to the test pattern for a specified time (typically one second) to polarize the test pattern. The test voltage (typically 100V) is then applied and, after a specified time (typically one second), Model 6485 measures the current. Surface insulation resistance can now be calculated as follows:

$$SIR = \frac{V}{I}$$

where: V is the sourced test voltage
I is the measured current

Figure I-19
Connections; surface insulation resistance test

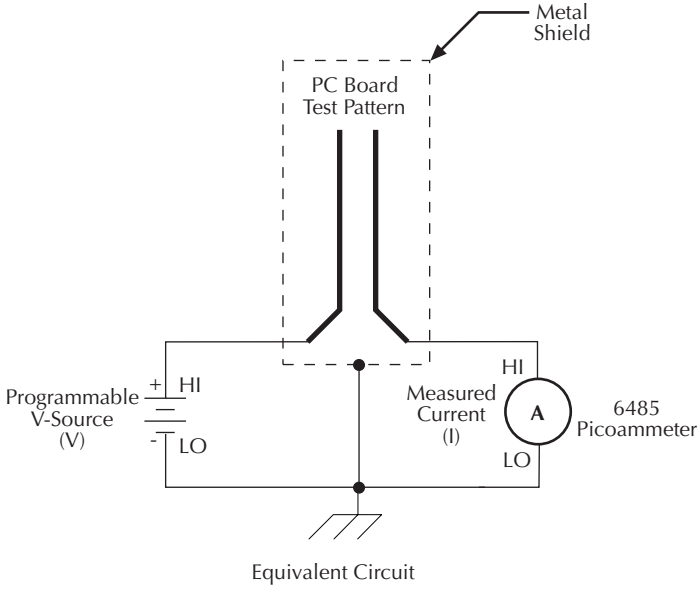

Photodiode characterization prior to dicing

The Model 6485 can be used as part of a cost-effective semiconductor photodiode leakage test system. This test characterizes the photo current under various illumination conditions.

In addition to the Model 6485, specialized equipment is required. This equipment includes a calibrated optical source in addition to semiconductor equipment (probe card or needle

mounts, etc.,), as well as a triggerable voltage source (the Model 2400 is used in our example). Several Model 6485's can be connected to probe pads to provide leakage current readings forced by the bias voltage source. As an alternative, one or more 6485s could be switched through a switching mainframe and matrix switch card arrangement to take current measurements from multiple pads.

Measuring photo diode leakage can be described in two steps:

1. V_{sweep}, I_{meas} in total darkness

2. V_{bias}, I_{meas} in calibrated optical flux

In the 1st step, voltage sweeps and the resulting current leakage is measured. Then, a bias voltage is applied and resulting current leakage is measured while light is incrementally increased in calibrated steps. The results produce a graph similar to Figure I-20.

Figure I-20
General photo diode leakage

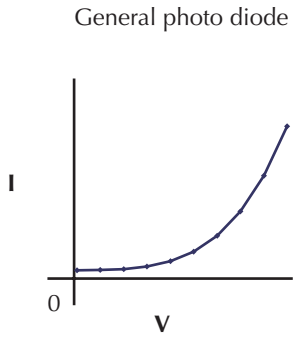

P.I.N. (Positive Intrinsic Negative) diodes respond as shown in Figure I-21.

Figure I-21
PIN photo diode leakage

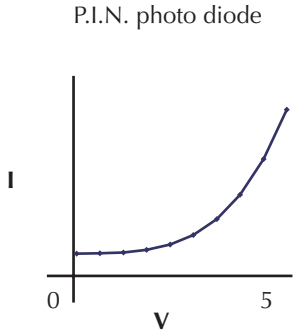

In total darkness, Avalanche diodes respond as shown by the solid line in Figure I-22. Notice the small irregularity of the curve while sweeping around 10-12V. This irregularity is made larger under additional applied light (see dashed lines of Figure I-22).

Figure I-22
Avalanche photo diode leakage

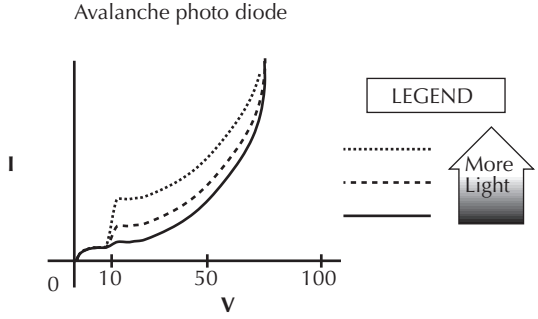

Connections are made to the Model 6485 through the BNC input connector (located on the rear panel) (Figure I-23). In order to properly sequence voltage and measurement of leakage current, the instruments triggering needs to be linked. Trigger link connection to the Model 2400 is made to the Model 6485 through the Trigger Link connector (located on the rear panel).

Figure I-23
Basic connection scheme

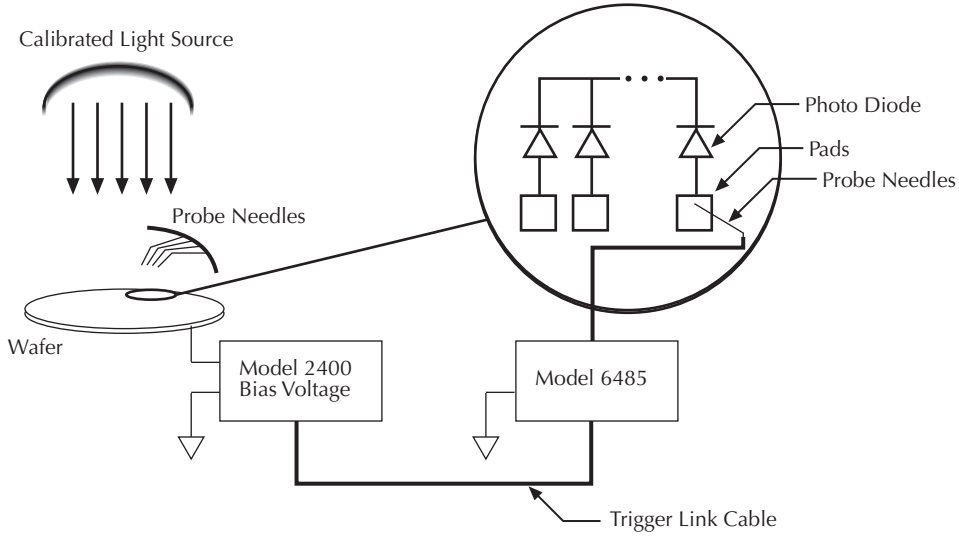

NOTE *The details on page I-12 concerning range change transients may be particularly relevant to this application*

Focused ion beam applications

Focused Ion Beam (FIB) systems have been developed to perform nanometer-scale imaging, micro machining, and mapping in the semiconductor industry. Typical applications include mask repair, circuit modification, defect analysis, and sample preparation of site-specific locations on integrated circuits.

FIB systems use a finely focused ion beam for imaging, or for site specific sputtering or milling. The magnitude of the beam current determines what type of operation is performed. A low beam current results in very little material being sputtered, and is therefore ideal for imaging applications. Utilization of high beam currents resulting in a great deal of material being removed by sputtering, and is subsequently well suited for precision milling operations.

Therefore, whether the application calls for imaging, or a complete circuit modification, monitoring and control of the beam current is critical to the success of the process. The ion beam current cannot be measured directly, but requires the use of an ion detector. There are several detectors commonly used throughout the industry including Channeltron®, Daly, Microchannel plate, and the Faraday cup. The Faraday cup can only be used in an analog mode, and is therefore not as sensitive as newer current pulse devices.

The function of the detector is to develop a secondary current proportional to the current of the primary ion beam, without interfering with the primary beam. The basic operation of most detectors is similar; an ion from the primary beam strikes the detector and a secondary ion is generated, isolated from the primary ion stream. This current is then measured and used to control the intensity of the beam.

The secondary currents generated by the detectors are very low, and require a high degree of accuracy and measurement repeatability. Currents as low as 5 or 6pA are not uncommon; therefore, the measurement device must be capable of achieving resolutions below 1pA.

The Keithley Model 6485 Picoammeter is ideal for this application because it offers a wide selection of range settings spanning from 20mA to 2nA. This will result in 5-1/2 digit resolution ranging from 100nA to 10fA. Numerous ranges, and fine measurement granularity, will meet all current requirements for this application, as well as provide additional sensitivity for future development needs.

Signal connections to the picoammeter are made using the BNC connector mounted on the rear panel. If the source on the ions is biased off ground, then the ion detector will most likely be at ground potential. A simple coaxial vacuum feedthrough can be used to make the connection between the detector and the picoammeter. See Figure I-24.

Figure I-24
Focused Ion Beam signal connections

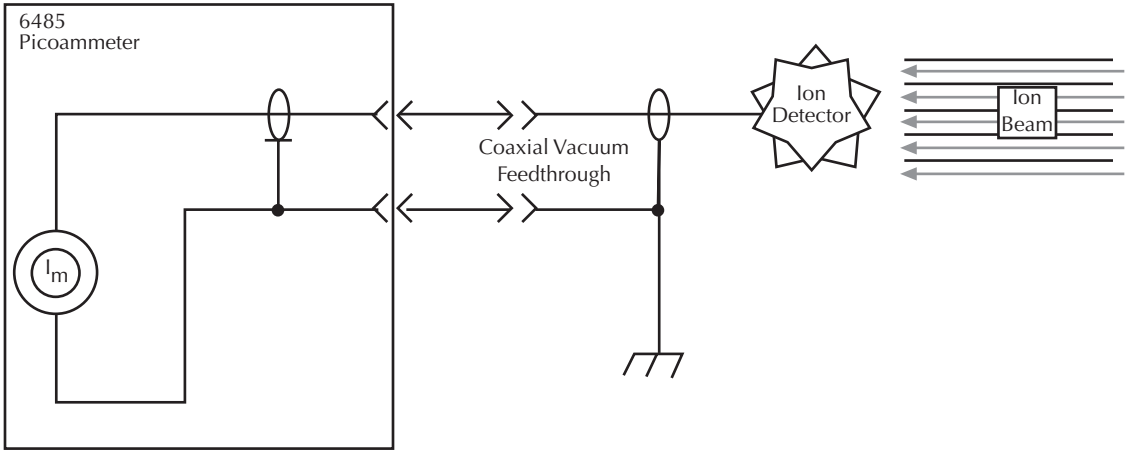

Using switching systems to measure multiple current sources

Refer to "External trigger example," page 7-13.

Index

Symbols

* (asterisk) 1-8
(more) 1-8
◀, ▶, ▲, and ▼ 1-8

A

acquire method to zero correct 2-15
Additional references 1-6
Address commands F-10
Addressed multiline commands F-10
ANALOG OUTPUT 1-9
Applications Guide I-1
ARM layer 7-7
    configuration menu 8-5
AUTO 1-8
Autoranging 4-2
    limits 4-3
Autozero 2-2
Avalanche photo diode leakage I-24
AVG 1-7
avoiding measurement errors I-10
AZERO 1-8

B

Baseline Suppression (Rel) D-8
Basic
    connection scheme I-25
    connections to DUT 2-6
Baud rate 9-17
Buffer 1-8, 6-1
    Size D-3
Bus
    description F-2
    management lines F-5

C

Cables 1-4
CAL
    VOFFSET 15-7
CALCulate command summary 14-2
Calibration 16-1, 16-3, 16-4, 16-5, 16-6
    Displaying count 16-13
    Displaying dates 16-13
    Resetting code 16-12
    SCPI commands 16-2
Calibration commands H-2
Calibration considerations 16-3
Calibration cycle 16-3
Calibration errors 16-4
Calibration menu 16-5
Calibrator 16-4
Calibrator voltage calculations 15-5
CAP-18 1-5
Capacitor leakage current I-19
Carrying case 1-5
Case sensitivity 9-12
Changing the calibration code 16-12
cleaning
    test fixtures 2-10
    tips 2-11
Clearing registers and queues 10-4
COMM 1-7
Command
    codes F-9, F-11
    execution rules 9-15
    path rules 19-4
    words 9-10
COMMON 1-9
Common Commands 11-2, F-11
Condition registers 10-15
CONFIG/LOCAL key 1-7, 9-10
Connections 2-6
    fundamentals 2-3
Connections for 20µA to 20mA range
    calibration 16-9
Connections for 20µA to 20mA range
    verification 15-8
Connections for 2nA to 2µA range calibration
    16-11
Connections for 2nA to 2µA range verification
    15-10
Connectors 1-4, 2-10
Contact information 1-3
control sources 7-5
Counters 7-7
coupling, electrostatic I-7, I-8
CS-565 barrel adapter 1-5
Current calculations 16-6
Current calibration 16-7
Current measurement accuracy 15-7
currently detected frequency 1-13

D

Data
- and stop bits 9-17
- Format D-3

Data lines F-5
Data Store (Buffer) D-6
DC current calibrator 15-8
DCL (device clear) 9-8
DDC language 9-2
Default settings 1-15
detected line frequency 1-14
Digital
- Calibration D-8
- filter 4-8, D-6
- filter control 4-11

digital board revision levels 11-3
DIGITS 1-8
Digits 4-3
DISP 1-7
DISP test 17-4
Display 1-12
display board revision levels 11-3
DISPlay command summary 14-4
display on or off 13-2
DISPlay subsystem 13-2
DISPlay, FORMat, and SYSTem 13-1
Displaying Rel 5-3

E

Electrochemical effects C-4
Electromagnetic Interference (EMI) C-5
Electrometer Calibration 15-4
Electrostatic interference C-4, I-7
Enable registers 10-4, 10-5
engineering 4-3
- units 1-12

ENTER 1-8
Entering calibration dates 16-11
Environmental conditions 15-2
EOI and Bus Hold-off D-3
Equipment 16-3
ERR 1-8
Error
- and status messages 9-9, B-2
- queue 10-18

Errors 16-4
Event detectors 7-5
Event enable registers 10-17
Event registers 10-16
Example reading limits calculation 15-5
Execute D-8
EXIT 1-8
External trigger example 7-13
External triggering 7-11

F

FAST 1-8
Features 1-6
FILT 1-8
Filters 4-7
firmware revision level 1-14, 11-3
Floating measurements 2-12
Flow control, RS-232 (signal handshaking) 9-17
Focused ion beam applications I-25
Focused Ion Beam signal connections I-26
FORMat command summary 14-5
FORMat subsystem 13-3
Front and rear panel 1-6
Front panel 1-7
Front panel GPIB operation 9-9
Front panel tests 17-3
Function keys 1-7

G

General IEEE-488 bus commands 9-7
General Measurement Considerations C-1
General photo diode leakage I-23
GET (group execute trigger) 9-9
GPIB
- Protocol selection G-4
- trigger link cables and adapters 1-5

GPIB 488.1 Protocol G-3
GPIB and trigger link cables and adapters 1-5
GPIB interface 9-2, 9-3
GPIB status indicators 9-9
Ground link 1-4, 1-9, C-2
Ground loops C-2
GTL (go to local) 9-8
Guard plate 2-10
Guarding to reduce leakage currents I-3

H

HALT 1-8
Handle 1-8
Handling precautions 1-4
Handling tips 2-10
Handshake lines F-5
Humidity C-4

I

identification query 11-3
Idle and initiate 7-4
IEEE
    command groups F-13
IEEE-488 1-10
    bus command summary F-7
    bus configuration F-4
    Bus Overview F-1
    connector 9-5
    documentation requirements G-2
    SCPI Conformance Information G-1
IEEE-488 handshake sequence F-6
IEEE-488.2 common commands and queries 11-2
IFC (interface clear) 9-8
Input 1-9
    cables, connectors and adapters 1-4
    connector 2-3
    protection 2-11
    trigger requirements 7-12
Input bias current I-3
Inspection for damage 1-3
Instruction Manual 1-5
Interface
    available 9-2
    configuration 9-3
    function codes F-14
    selection 9-3
internal wiring 2-10

K

Keithley 237-BNC-TRX 15-4
Keithley 4801 15-4
Keithley CAP-18 15-4
Keithley Model 5156 15-4
KEY test 17-4

L

Languages 9-2
Leakage currents and guarding I-2
Light C-4
LIMIT 1-8
Limit test configuration 8-5
Limit Tests 8-1
Limits configuration menu 8-5
Line frequency 1-13
Line fuse location 17-3
Line fuse ratings 17-2
Line power connection 1-12
LLO (local lockout) 9-8
Locking out calibration 16-12
LOG 1-7, D-2
Logarithmic 5-6
Long-form and short-form versions 9-12
Low noise input cables 2-5
LSTN 1-8

M

M/X+B 1-7
Magnetic fields C-5
Making connections I-10
management lines, bus F-5
Manual ranging 4-2
manually keying in REL 5-3
MATH 1-8
Maximum input levels 2-4
MEAN 6-7
Measure action 7-6
Measurement considerations 2-16, C-2, I-2
measurement errors, avoiding I-10
Measurement event status 10-13
Measurement overview 2-2
Measurement ranges 4-2
Measuring High Resistance Using the 6485 I-20
Measuring high resistance with external bias source I-19
MED 1-8
Median filter 4-7
MEDN 1-7
MENU 1-7
Menu 1-18, 16-5
Model 1050 padded carrying case 1-5
Model 4288-1 single fixed rack mount kit 1-5
Model 4288-2 side-by-side rack mount kit 1-5
Model 4288-4 side-by-side rack mount kit 1-5
Model 4801 1-4
Model 4802-10 1-4
Model 4803 1-4
Model 6485 interface function codes F-14
Model 7078-TRX-BNC adapter 1-4
Model 8502 trigger link adapter 1-5
Model 8503 DIN to BNC trigger cable 1-5
Models 7007-1 and 7007-2 shielded GPIB cables 1-5
Models 8501-1 and 8501-2 trigger link cables 1-5
Multiple command messages 9-14
Multiple response messages 9-15
MX+B 1-7
mX+b, m/X+b (reciprocal), and Logarithmic 5-5

N

Noise I-5
Noise and safety shields 2-8
Noise and source impedance I-5
noisy readings I-7
NPLC Menu 4-6

O

Offset voltage calibration 15-7
operating at a higher speed 13-2
Operation
    consideration 4-10
    event status 10-12
Operation keys 1-7
Optional command words 1-19
Options and accessories 1-4
Output queue 10-18
Output trigger specifications 7-12
Output triggers 7-7
Overview of this manual 1-2

P

Package content 1-4
Parity, RS-232 9-17
peak-to-peak 6-7
Performance considerations 2-2
Performance verification 15-1
Phone number 1-3
Photodiode characterization prior to dicing I-22
Piezoelectric and stored charge effects C-3
PIN photo diode leakage I-24
PKPK 6-7
polling sequence D-12
Pomona 1269 15-4
POWER 1-7
Power module 1-10
Power-up 1-12
Power-up sequence 1-14
Primary address 9-7
Procedure 16-6
Program Message Terminator (PMT) 9-15
Program messages 9-13

Q

Query commands 1-19, 9-12
Questionable event status 10-15
Queues 10-18

R

Rack mount kits 1-5
Range D-6
    and values 4-5
    keys 1-8
    symbols for rel values 5-3
    Units, Digits, Rate, and Filters 4-1
range change transients I-12
Rate 1-8, 4-5
    Key 4-6
Reading limits for 20µA to 20mA ranges 15-8
Reading limits for 2nA to 2µA ranges 15-9
Reading Mode D-2
Rear panel 1-9
Rear panel summary 1-8
RECALL 1-8
Recall 6-3
Recommended test equipment 15-3
Registers
    Bit descriptions 10-10
    Condition 10-15
    Enable 10-4, 10-5
    Event 10-16
    Reading 10-6
reinstate the previous Rel 5-2
REL 1-7, 1-8, 5-2
Relative, mX+b, m/X+b (Reciprocal), and Log
    5-1
REM 1-8
Remote calibration H-1
Remote setup operation 1-16
REN (remote enable) 9-7
Response 9-15
    Message Terminator (RMT) 9-16
    time 4-10
restore setup 1-15
Routine maintenance 17-1
RS-232 1-10
    connections 9-18
RS-232 interface 9-2, 9-3, 9-16
RS-232 settings 9-16

S

safety shield 3-3
Safety symbols and terms 1-3
SAVE 1-8
Saving calibration 16-11
scientific (SCI) 4-3
scientific notation 1-12
SCPI commands F-11
    amps function 3-5
    autozero 2-3
    buffer 6-5
    limit tests 8-7
    reset registers and clear queues 10-4
    system 13-8
    triggering 7-9
SCPI language 9-2
SCPI programming
    filters 4-12
    line frequency 1-13
    mX+b, m/X+b, and log 5-7
    range and digits 4-4
    rate 4-6
    relative 5-4
    zero check and zero correct 2-15
SCPI Reference Tables 14-1
SCPI Signal Oriented Measurement Commands 12-1
SDC (selective device clear) 9-8
SDEViation 6-7
select power-on setup 1-15
Sending a response message 9-15
Sending and receiving data, RS-232 9-16
SENSe command summary 14-5
serial number 1-18, 11-3
Serial polling and SRQ 10-9
Serial Port, See RS-232
Service request enable register 10-8
Setting and controlling relative 5-2
Setting line voltage and replacing line fuse 17-2
SETUP 1-8
shielding I-7, I-8
Shielding vs. Guarding I-10
Short-form rules 9-12
Single command messages 9-13
SLOW 1-8
Source capacitance I-6
source impedance I-5
Source resistance I-5
Source Resistance (minimum recommended) I-6
SPE, SPD (serial polling) 9-9
SPE, SPD polling sequence D-12
Special keys and power switch 1-7
Speed vs. noise characteristics 4-5
SRQ 1-8, D-3, G-7
Standard event status 10-10
STAT 1-8
statistics 6-4
Status and Error Messages B-1
Status byte
    and mask interpretation D-13
    and service request (SRQ) 10-7
    format D-12
Status byte format D-14
Status byte register 10-8
STATus command summary 14-6
Status register sets 10-10
Status Structure 10-1
Status Word D-8
STD DEV 6-4
STORE 1-8
Store 6-2
Store Calibration D-3
Support 16-12
SYSTem command summary 14-8

T

TALK 1-8
terminals 2-10
Terminator 9-17, D-8
Test fixture 2-9
Test limit display messages 8-3
tests
    front panel 17-3
TIMER 1-8
timestamps 6-4
TRACe command summary 14-9
Triboelectric effects C-3
TRIG 1-7, 1-8
TRIGger command summary 10-10
Trigger delay 7-6
TRIGGER LINK 1-9
Trigger Mode D-7
Trigger model
    configuration 7-7
    menu structure 7-7
Typical addressed command sequence F-12
Typical bus sequence F-12
Typical command sequences F-12

U

U0 Status word D-10
U1 Status word D-11
U2 Status word D-12
Unaddress commands F-10
undetected errors I-7
Uniline commands F-9
Units 4-3
Universal multiline commands F-9
Unpacking and Inspection 1-3
user setup 1-15
Using common commands and SCPI commands
in the same message 9-14

V

Verification limits 15-5
Verification test procedures 15-6
Verification test requirements 15-2
VOFFSET 16-5
Voltage burden I-3
voltage transients I-13

W

Warm-up period 2-2
Warranty information 1-3

Z

ZCHK 1-7
ZCOR 1-7
Zero Check D-2
Zero check and zero correct 2-13
Zero Correct D-6

Specifications are subject to change without notice.
All Keithley trademarks and trade names are the property of Keithley Instruments, Inc. All other trademarks and trade names are the property of their respective companies.

KEITHLEY

Keithley Instruments, Inc. 28775 Aurora Road • Cleveland, Ohio 44139 • 440-248-0400 • Fax: 440-248-6168
1-888-KEITHLEY (534-8453) • www.keithley.com

Sales Offices:

BELGIUM:	Bergensesteenweg 709 • B-1600 Sint-Pieters-Leeuw • 02-363 00 40 • Fax: 02/363 00 64
CHINA:	Yuan Chen Xin Building, Room 705 • 12 Yumin Road, Dewai, Madian • Beijing 100029 • 8610-6202-2886 • Fax: 8610-6202-2892
FINLAND:	Tietäjäntie 2 • 02130 Espoo Finland • Phone: 358 9 25105114 • Fax: 358 9 2510 5100
FRANCE:	3, allée des Garays • 91127 Palaiseau Cédex • 01-64 53 20 20 • Fax: 01-60 11 77 26
GERMANY:	Landsberger Strasse 65 • 82110 Germering • 089/84 93 07-40 • Fax: 089/84 93 07-34
GREAT BRITAIN:	Unit 2 Commerce Park, Brunel Road • Theale • Reading • Berkshire RG7 4AB • 0118 929 7500 • Fax: 0118 929 7519
INDIA:	Flat 2B, Willocrissa • 14, Rest House Crescent • Bangalore 560 001 • 91-80-509-1320/21 • Fax: 91-80-509-1322
ITALY:	Viale San Gimignano, 38 • 20146 Milano • 02-48 39 16 01 • Fax: 02-48 30 22 74
KOREA:	FL., URI Building • 2-14 Yangjae-Dong • Seocho-Gu, Seoul 137-130 • 82-2-574-7778 • Fax: 82-2-574-7838
NETHERLANDS:	Postbus 559 • 4200 AN Gorinchem • 0183-635333 • Fax: 0183-630821
SWEDEN:	C/0 Regus Business Centre • Frosundaviks Allé 15, 4tr • SE-169 70 Solna • Sweden • Phone: 46 8 509 04 679 • Fax: 46 8 655 26 10
SWITZERLAND:	Kriesbachstrasse 4 • 8600 Dübendorf • 01-821 94 44 • Fax: 01-820 30 81
TAIWAN:	1FL., 85 Po Ai Street • Hsinchu, Taiwan, R.O.C. • 886-3-572-9077 • Fax: 886-3-572-9031

© Copyright 2001 Keithley Instruments, Inc.
Printed in the U.S.A.
10/01