RHIC/AP/4
7/26/93
G.F.Dell

Report on Fiducials for RHIC Dipoles and Quadrupoles

This report is a reworking of an informal note dated 1/14/93. It describes the method that has been used to generate coordinates of fiducials on the cryostats of the 9.45 m dipoles and the 1.11 m quadrupoles. Fiducials for dipoles and quadrupoles of nonstandard length could be incorporated as information for their generation becomes available.

A. Basic Computation

The calculation uses an adaptation of a geometry program, written by E. Courant, that automatically fits a lattice into the RHIC tunnel. The origin is at the center of the RHIC enclosure, and the meter is the unit of length. Each element is represented by a complex number corresponding to its length and bend. The length, bend angle, and element sequence are obtained from a MAD TWISS file. The X,Y coordinates associated with the downstream end of an element are the real and imaginary parts of the sum vector at that point.

Lengths ℓ specified by lattice design programs indicate the distance along the central orbit. A dipole is represented by a chord of length $L = 2\rho\sin(\theta_B/2) = (2\ell/\theta_B)\sin(\theta_B/2)$ oriented at the angle $(\theta_1+\theta_B/2)$ where θ_1 is the total bend prior to the dipole, and θ_B is its deflection angle. See Figure 1.

B. Engineering

1. Coordinate system - Although a metric system with origin at the center of the ring enclosure is used for geometry calculations, designers use a system whose origin is at the tunnel centerline at 6:00 and has the inch as its unit of length.

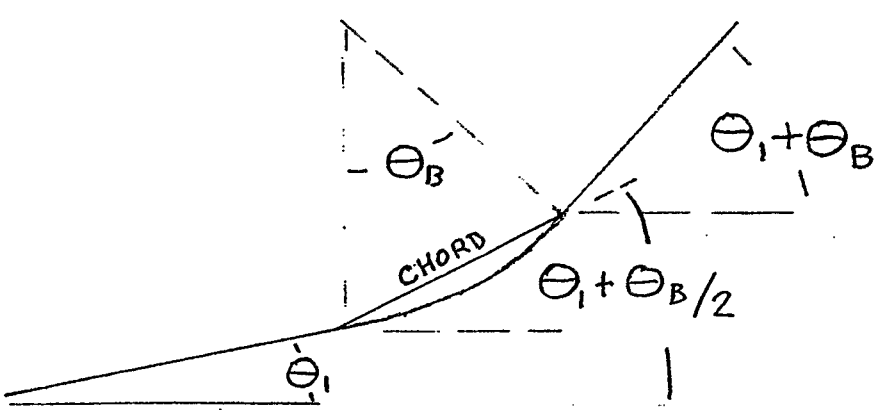

Figure 1. Definition of the chord and angle use to represent a dipole.

2. Expansion between 4 K and 300 K - Figure 2 shows the centerline B-A-B of a dipole and the support posts #1, #2 and #3. The dipole coldmass is fixed to post #2 at point "A" and moves relative to posts #1 and #3. The expansion coefficient $\Delta L/L = 3.1378 \times 10^{-3}$ over the interval 4 K to 300 K was measured by J. Sondericker. The change in length ΔX dominates the transverse change ΔY; the radius of curvature changes from 242.7806m at 4 K to 243.5448m at 300 K. AS the coldmass is fixed at its center, expansion does not change the angular orientation of the cryostat. The change in separation of point "A" and the center of post #2 is small (0.004") and has been ignored; hence expansion does not impact on the placement of the cryostats. The CAD program uses the coordinates of point "A", a distance of 1.195 inches from point "A" to the center of post #2, and the angle $\theta_1+\theta_B/2$ when it positions dipole assemblies. For quadrupoles it uses the centerpoint of a quadrupole and the local value of θ_1.

C. Fiducials

1. Dipoles— A sketch of the location of the ten fiducials located on a dipole cryostat is shown in Figure 3. According to S. Norton, there is but one type of arc dipole; hence the beam in one ring enters dipoles at the end of fiducial #5, and the beam in the other ring enters dipoles at the end of fiducial #1. The locations of the fiducials relative to the center of the cryostat are listed in Table 1. Fiducials 1 to 5 are on the side of the cryostat nearest the center of the RHIC enclosure.

Coordinates of the dipole fiducials in the "Engineering" reference frame are given by the relations:

$$X(n) = X_A + L(n)\cos(\theta_A) - (SAG + M(n))\sin(\theta_A)$$
$$Y(n) = Y_A + L(n)\sin(\theta_A) + (SAG + M(n))\cos(\theta_A)$$

X_A, Y_A are the coordinates of point "A", the magnet's center, SAG = 1.195 inches, and $\theta_A = \theta_1 + \theta_B/2$ is the angular orientation of the magnet chord. The convention for naming the fiducials is:

I or O for inner or outer arc
01 to 12 for azimuthal location (face of clock)
D00 to D20 for dipoles 0 to 20 in each hour of azimuth
01 to 10 for fiducial specification

Hence, O10D0904 specifies the 4th fiducial on dipole D90 in interval 10:00 to 11:00 of the outer ring.

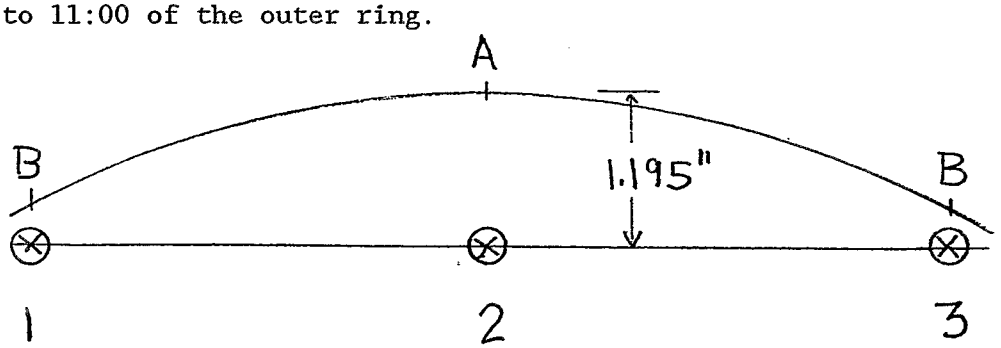

Figure 2. Layout of support posts #1,#2, and #3 and the corresponding points "B","A", and "B" along the dipole axis. The coldmass is attached to support #2 at point "A" and slides relative to posts #1 and #3 at points "B".

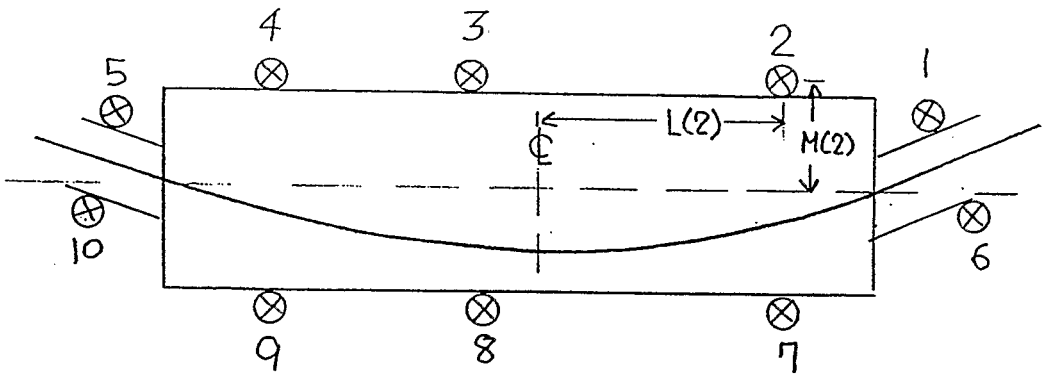

Figure 3. Fiducials for the RHIC arc dipoles. L(n) and M(n) are coordinates of the fiducials relative to the centerpoint of the coldmass.

n	L(n) (inch)	M(n) (inch)
1	186.39561	5.41786
2	132.030	12.5650
3	-9.470	12.5650
4	-132.030	12.5650
5	-186.39561	5.41786
6	186.58233	-4.18032
7	132.030	-12.5650
8	-9.470	-12.5650
9	-132.030	-12.5650
10	-186.58233	-4.18032

Table 1 Coordinates of fiducials on the dipole cryostat relative to the centerpoint of the dipole coldmass.

2. Quadrupoles - A sketch of the C-Q-S cryostat is shown in Figure 4. The fiducials are located symmetrically with respect to the centerpoint of the coldmass. The centerline of the quadrupole differs from the centerline of the coldmass by 0.185 inches. S. Plate indicates plumbing considerations prohibit turning the C-Q-S assembly around to make an S-Q-C assembly; instead, the cryostat orientation will be unchanged, but the coldmass will be inserted in the opposite sense. This will cause the centerline of the quadrupole to move to the right of the coldmass centerline. As coordinates are generated relative to the centerpoint of the quadrupole, appropriate corrections must be made to compensate for the difference between the centerlines of the quadrupoles and the cryostats. Fiducial # 1 is always at the sextupole end of the C-Q-S or S-Q-C assembly, and it is always on the side nearest the center of the RHIC enclosure. The appropriate numbers are tabulated in Table 2. Attention is called to the increase of nearly 15 inches, as compared to 1/14/93, in the values of L(n) for n = 2,3,6, and 7. This increase results from rotating posts #1 and #3 to increase the distance between their fiducials (4/7/93).

The coordinates of the fiducials on the "quadrupole" cryostats are:

$$X(n) = X_A + L(n)\cos(\theta_A) - M(n)\sin(\theta_A)$$
$$Y(n) = Y_A + L(n)\sin(\theta_A) + M(n)\cos(\theta_A)$$

where X_A, Y_A are the coordinates of the centerpoint of the quadrupole, L(n) and M(n) are listed in Table 2, and θ_A is the angular orientation of the centerline of the "quadrupole" assembly. Using the same name convention, 010Q0904 specifies the 4th fiducial on quadrupole Q90 in interval 10:00 to 11:00 of the outer ring.

	C-Q-S units		S-Q-C units	
n	L(n) (inch)	M(n) (inch)	L(n) (inch)	M(n) (inch)
1	54.1850	4.800	-54.1850	4.800
2	42.4350	12.565	-42.4350	12.565
3	-42.0650	12.565	42.0650	12.565
4	-53.8150	4.800	53.8150	4.800
5*	54.1850	-4.800	-54.1850	-4.800
6*	42.4350	-12.565	-42.4350	-12.565
7*	-42.0650	-12.565	42.0650	-12.565
8*	-53.8150	-4.800	53.8150	-4.800

LOCATION:	ARCS		ARCS
	2:00 - 3:00		4:00 - 5:00
	6:00 - 7:00		8:00 - 9:00
	10:00 - 11:00		12:00 - 1:00

Table 2. List of fiducial coordinates relative to the centerpoint of the 1.110 m quadrupoles. The * denotes numbering consistent with the convention used for dipole cryostats - this differs from the convention originally used on drawings of the C-Q-S units. The arcs where C-Q-S or S-Q-C units are used is indicated by the entries under "LOCATION".

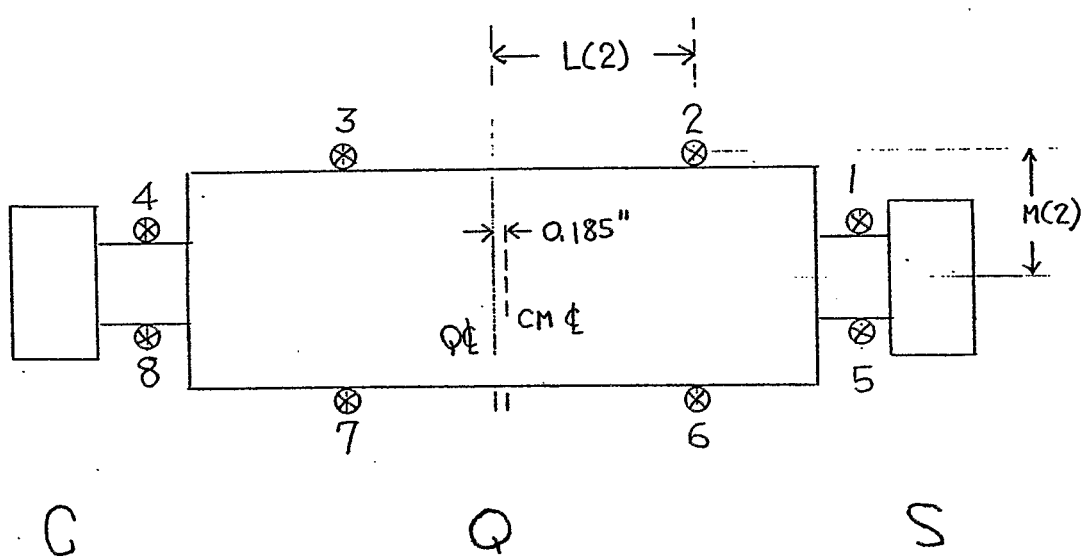

Figure 4. Layout of a C-Q-S assembly (numbering convention is the same used for dipoles). The quadrupole centerline is 0.185 inches to the left of the coldmass centerline for the C-Q-S and is 0.185 inches to the right of the coldmass centerline in the S-Q-C.

D. Conversion to the BNL Reference Frame

The steps in converting to the metric BNL reference frame are:

1. Convert coordinates of fiducials from inches to meters,

$$X(m) = X(inch)\ 0.0254$$

DON'T USE 1 m = 39.37 INCHES!!!

$$Y(m) = Y(inch)\ 0.0254$$

2. Convert from system with origin at 6:00 centerline to a coordinate system whose origin is at the center of the ring enclosure.

$$X(m)' = X(m)$$
$$Y(m)' = Y(m) - 590.3298125^{**}$$

3. Convert to the BNL frame**

$$N(m) = N_o(m) - X(m)' \sin(\theta_o) + Y(m)' \cos(\theta_o)$$
$$E(m) = E_o(m) + X(m)' \cos(\theta_o) + Y(m)' \sin(\theta_o)$$

** The Y axis of the RHIC reference frame is oriented at $\theta_0 = 1.999898^\circ$ east from the N axis of the BNL frame. The coordinates of the center of the RHIC enclosure were obtained from drawing C-2 of the Ammann & Whitney portfolio of July 15, 1979. These are:

$N_o(ft) = 105{,}920.3314$	$N_o(m) = 32{,}284.51701$
$E_o(ft) = 99{,}180.5694$	$E_o(m) = 30{,}230.23755$

E. Results - Portions of an output are attached. It starts at the 6:00 crossing and runs through dipole 05D11. It then jumps to dipole 04D10 and continues through 03D08. The latter section shows the labelling convention as one passes through the 4:00 crossing at element #469. There are two types of entries:

1. Single line entries for the outer and inner rings including the element number, the name of the element, the coordinates, N(m) and E(m), of the reference orbit at the element centerline, and the angular orientation in grads (100 grads = 90^0) of the dipole chord or quadrupole axis. The names MCR, D0X0, and MQ50 denote a crossing point, dipole DX0, and the center of quadrupole Q50, respectively. N(m), E(m) are coordinates in the BNL reference frame, and the angle PHI is measured relative to the X axis of the RHIC coordinate system whose Y axis is defined by the 12:00 and 6:00. crossing points.

2). Lists of fiducials indicating element number, fiducial number, name, N(m), and E(m) for the outer and inner rings. The line for fiducial #1 also contains the distance of the vertical fiducials from the beam plane; hence TOP-BL(m) is the distance in meters from the fiducial on the top of the cryostat to the beam plane, and BOT-BL(m) denotes the distance from the fiducial on the bottom of the cryostat to the beam plane.

The format has been arranged so the outer ring is always listed in the left column. Generation of fiducials for elements having entries of only one line requires information on the location of the fiducials relative to the centerpoint of the cryostats.

CENTER OF RHIC ENCLOSURE (BNL GRID): EM0(m) =32284.517011 NM0(m) =30230.237553

RADIUS: ENCLOSURE CENTER - TUNNEL CENTERLINE @ 6:00 = 590.3298125

I300 = 1 : COORDINATES OF DIPOLES INCLUDE CORRECTION FOR EXPANSION FROM 4K TO ROOM TEMPERATURE

PHI IS MEASURED FROM THE X-AXIS

NO	NAME	N(m)	E(m)	PHI(grad)	NAME	N(m)	E(m)	PHI(grad)
1	MCR	31694.2950825	30209.6276012	0.0000000	MCR	31694.2950825	30209.6276012	0.0000000
3	D0XO	31693.8798030	30221.2702827	-0.6003576	D0XI	31693.8972394	30221.2708915	0.6003576
6	D00O	31693.3229332	30231.9071685	-0.7173218	D00I	31693.7107990	30231.9207124	0.7173218
10	MQ1O	31693.1703444	30235.6832071	-0.2339284	MQ1I	31693.5996264	30235.6981972	0.2339284
14	MQ2O	31693.0096628	30239.8461072	-0.2339284	MQ2I	31693.4695422	30239.8621657	0.2339284
18	MQ3O	31692.8362531	30244.3387618	-0.2339284	MQ3I	31693.3291538	30244.3559734	0.2339284
26	MQ4O	31691.2753999	30284.7769527	-0.2339284	MQ4I	31692.0655232	30284.8045430	0.2339284
36	MQ5O	31690.9868980	30292.2513869	-0.2339284	MQ5I	31691.8319588	30292.2808956	0.2339284

FIDUCIALS: BNL FRAME(m)

			N(m)	E(m)		N(m)	E(m)	TOP-BL(m)	BOT-BL(m)
36	1	O05Q0501	31691.161811	30290.880814	I05Q0501	31691.996795	30290.909075	0.121920	-0.391287
36	2	O05Q0502	31691.347384	30291.186649	I05Q0502	31692.184610	30291.213538		
36	3	O05Q0503	31691.264602	30293.331352	I05Q0503	31692.117592	30293.358791		
36	4	O05Q0504	31691.056006	30293.621973	I05Q0504	31691.911138	30293.650937		
36	5	O05Q0505	31690.918152	30290.871410	I05Q0505	31691.753073	30290.901461		
36	6	O05Q0506	31690.709557	30291.162030	I05Q0506	31691.546619	30291.193607		
36	7	O05Q0507	31690.626775	30293.306733	I05Q0507	31691.479601	30293.338860		
36	8	O05Q0508	31690.812348	30293.612568	I05Q0508	31691.667416	30293.643323		

41	D05O	31690.7400198	30299.6594443	0.9076547	D05I	31691.6256200	30299.6759869	1.1415832
49	MQ6O	31690.6808603	30307.0713782	2.0492379	MQ6I	31691.5808564	30307.0738208	2.0492380

FIDUCIALS: BNL FRAME(m)

			N(m)	E(m)		N(m)	E(m)	TOP-BL(m)	BOT-BL(m)
49	1	O05Q0601	31690.806517	30305.695415	I05Q0601	31691.706513	30305.697858	0.121920	-0.391287
49	2	O05Q0602	31691.002937	30305.994400	I05Q0602	31691.902933	30305.996842		
49	3	O05Q0603	31690.997109	30308.140692	I05Q0603	31691.897105	30308.143135		

49	4	O05Q0604	31690.799068	30308.438605	I05Q0604	31691.699064	30308.441048
49	5	O05Q0605	31690.562678	30305.694753	I05Q0605	31691.462674	30305.697196
49	6	O05Q0606	31690.364637	30305.992667	I05Q0606	31691.264633	30305.995109
49	7	O05Q0607	31690.358809	30308.138959	I05Q0607	31691.258805	30308.141401
49	8	O05Q0608	31690.555229	30308.437943	I05Q0608	31691.455225	30308.440386

54	D06O	31690.6564094	30317.7284290	2.4363202	D06I	31691.5564202	30317.7253986	2.4363203
60	MQ7O	31690.6903574	30321.7977138	2.8234026	MQ7I	31691.5903165	30321.7892107	2.8234026
68	MQFA	31690.8293971	30336.5181041	2.8234026	MQDA	31691.7293561	30336.5096010	2.8234026
73	D08O	31690.9453974	30343.9313239	4.0623928	D08I	31691.8451909	30343.9053036	4.0623929

FIDUCIALS: BNL FRAME(m)

			N(m)	E(m)		N(m)	E(m)	TOP-BL(m)	BOT-BL(m)
73	1	O05D0801	31691.250134	30348.658940	I05D0801	31692.149928	30348.632919	0.121920	-0.391287
73	2	O05D0802	31691.391684	30347.273383	I05D0802	31692.291477	30347.247363		
73	3	O05D0803	31691.287803	30343.680785	I05D0803	31692.187597	30343.654764		
73	4	O05D0804	31691.197827	30340.569061	I05D0804	31692.097621	30340.543041		
73	5	O05D0805	31690.976454	30339.193999	I05D0805	31691.876247	30339.167978		
73	6	O05D0806	31691.006579	30348.670727	I05D0806	31691.906373	30348.644707		
73	7	O05D0807	31690.753648	30347.291832	I05D0807	31691.653442	30347.265812		
73	8	O05D0808	31690.649768	30343.699234	I05D0808	31691.549561	30343.673213		
73	9	O05D0809	31690.559792	30340.587510	I05D0809	31691.459585	30340.561490		
73	10	O05D0810	31690.732625	30339.196304	I05D0810	31691.632418	30339.170284		

79	MQDA	31691.2579418	30351.3388606	5.3013831	MQFA	31692.1568883	30351.2953427	5.3013831

FIDUCIALS: BNL FRAME(m)

			N(m)	E(m)		N(m)	E(m)	TOP-BL(m)	BOT-BL(m)
79	1	O05Q0901	31691.313175	30349.958276	I05Q0901	31692.212121	30349.914759	0.121920	-0.391287
79	2	O05Q0902	31691.524605	30350.246841	I05Q0902	31692.423552	30350.203323		
79	3	O05Q0903	31691.628379	30352.390631	I05Q0903	31692.527326	30352.347113		
79	4	O05Q0904	31691.445809	30352.698268	I05Q0904	31692.344756	30352.654750		
79	5	O05Q0905	31691.069620	30349.970066	I05Q0905	31691.968566	30349.926548		
79	6	O05Q0906	31690.887050	30350.277703	I05Q0906	31691.785996	30350.234185		
79	7	O05Q0907	31690.990824	30352.421493	I05Q0907	31691.889770	30352.377975		
79	8	O05Q0908	31691.202254	30352.710058	I05Q0908	31692.101201	30352.666540		

84	D09O	31691.7776969	30361.9832574	5.6884654	D09I	31692.6763787	30361.9342730	5.6884655
92	MQF	31692.0248322	30366.1353354	6.0755477	MQD	31692.9231830	30366.0808880	6.0755478

FIDUCIALS: BNL FRAME(m)

			N(m)	E(m)		N(m)	E(m)	TOP-BL(m)	BOT-BL(m)
92	1	O05Q1001	31692.063273	30364.754182	I05Q1001	31692.961624	30364.699734	0.121920	-0.391287
92	2	O05Q1002	31692.278197	30365.040154	I05Q1002	31693.176547	30364.985707		
92	3	O05Q1003	31692.408032	30367.182523	I05Q1003	31693.306383	30367.128076		
92	4	O05Q1004	31692.229217	30367.492358	I05Q1004	31693.127567	30367.437910		
92	5	O05Q1005	31691.819879	30364.768932	I05Q1005	31692.718230	30364.714485		
92	6	O05Q1006	31691.641064	30365.078767	I05Q1006	31692.539414	30365.024319		
92	7	O05Q1007	31691.770899	30367.221136	I05Q1007	31692.669250	30367.166689		
92	8	O05Q1008	31691.985823	30367.507108	I05Q1008	31692.884174	30367.452661		

97 D10O 31692.5192177 30373.5329611 7.3145380 D10I 31693.4165087 30373.4610278 7.3145380

FIDUCIALS: BNL FRAME(m)

			N(m)	E(m)		N(m)	E(m)	TOP-BL(m)	BOT-BL(m)
97	1	O05D1001	31693.064960	30378.238849	I05D1001	31693.962251	30378.166916	0.121920	-0.391287
97	2	O05D1002	31693.135575	30376.847872	I05D1002	31694.032866	30376.775939		
97	3	O05D1003	31692.848384	30373.265265	I05D1003	31693.745675	30373.193331		
97	4	O05D1004	31692.599633	30370.162195	I05D1004	31693.496924	30370.090262		
97	5	O05D1005	31692.308334	30368.800230	I05D1005	31693.205625	30368.728297		
97	6	O05D1006	31692.822325	30378.263057	I05D1006	31693.719616	30378.191124		
97	7	O05D1007	31692.499314	30376.898876	I05D1007	31693.396605	30376.826943		
97	8	O05D1008	31692.212123	30373.316269	I05D1008	31693.109414	30373.244336		
97	9	O05D1009	31691.963372	30370.213199	I05D1009	31692.860663	30370.141266		
97	10	O05D1010	31692.064941	30368.814983	I05D1010	31692.962232	30368.743050		

105 MQD 31693.2096007 30380.9148751 8.5535282 MQF 31694.1051523 30380.8255104 8.5535283

FIDUCIALS: BNL FRAME(m)

			N(m)	E(m)		N(m)	E(m)	TOP-BL(m)	BOT-BL(m)
105	1	O05Q1101	31693.194266	30379.533272	I05Q1101	31694.089817	30379.443907	0.121920	-0.391287
105	2	O05Q1102	31693.420155	30379.810664	I05Q1102	31694.315707	30379.721299		
105	3	O05Q1103	31693.633261	30381.946358	I05Q1103	31694.528813	30381.856993		
105	4	O05Q1104	31693.466638	30382.262916	I05Q1104	31694.362189	30382.173552		
105	5	O05Q1105	31692.951631	30379.557482	I05Q1105	31693.847182	30379.468118		
105	6	O05Q1106	31692.785007	30379.874041	I05Q1106	31693.680559	30379.784676		
105	7	O05Q1107	31692.998113	30382.009735	I05Q1107	31693.893665	30381.920370		
105	8	O05Q1108	31693.224003	30382.287127	I05Q1108	31694.119554	30382.197762		

110 D11O 31693.9914844 30388.2876590 9.7925185 D11I 31694.8852966 30388.1808628 9.7925185

FIDUCIALS: BNL FRAME(m)

	N(m)	E(m)	N(m)	E(m)	TOP-BL(m)	BOT-BL(m)

110	1	O05D1101	31694.719939	30392.968745	I05D1101	31695.613751	30392.861949	0.121920	-0.391287
110	2	O05D1102	31694.736372	30391.576074	I05D1102	31695.630184	30391.469278		
110	3	O05D1103	31694.309984	30388.007356	I05D1103	31695.203796	30387.900560		
110	4	O05D1104	31693.940668	30384.916317	I05D1104	31694.834480	30384.809520		
110	5	O05D1105	31693.596590	30383.566719	I05D1105	31694.490403	30383.459923		
110	6	O05D1106	31694.478430	30393.002377	I05D1106	31695.372242	30392.895581		
110	7	O05D1107	31694.102578	30391.651799	I05D1107	31694.996390	30391.545003		
110	8	O05D1108	31693.676190	30388.083081	I05D1108	31694.570002	30387.976285		
110	9	O05D1109	31693.306874	30384.992042	I05D1109	31694.200686	30384.885246		
110	10	O05D1110	31693.353956	30383.590932	I05D1110	31694.247768	30383.484136		

370 D10O 31834.6802334 30640.8977954 59.3521286 D10I 31835.2416202 30640.1941248 59.3521287

FIDUCIALS: BNL FRAME(m)

			N(m)	E(m)		N(m)	E(m)	TOP-BL(m)	BOT-BL(m)
370	1	O04D1001	31838.485931	30643.719122	I04D1001	31839.047318	30643.015451	0.121920	-0.391287
370	2	O04D1002	31837.519699	30642.716027	I04D1002	31838.081086	30642.012356		
370	3	O04D1003	31834.710171	30640.474575	I04D1003	31835.271558	30639.770905		
370	4	O04D1004	31832.276702	30638.533146	I04D1004	31832.838089	30637.829475		
370	5	O04D1005	31831.084040	30637.813868	I04D1005	31831.645427	30637.110198		
370	6	O04D1006	31838.337597	30643.912655	I04D1006	31838.898984	30643.208984		
370	7	O04D1007	31837.121624	30643.214991	I04D1007	31837.683011	30642.511320		
370	8	O04D1008	31834.312095	30640.973540	I04D1008	31834.873482	30640.269869		
370	9	O04D1009	31831.878627	30639.032110	I04D1009	31832.440013	30638.328439		
370	10	O04D1010	31830.928291	30638.001486	I04D1010	31831.489678	30637.297815		

378 MQF 31840.5367024 30645.4443385 60.5911189 MQD 31841.0841852 30644.7300114 60.5911189

FIDUCIALS: BNL FRAME(m)

			N(m)	E(m)		N(m)	E(m)	TOP-BL(m)	BOT-BL(m)
378	1	O04Q1001	31839.518508	30644.510346	I04Q1001	31840.065990	30643.796018	0.121920	-0.391287
378	2	O04Q1002	31839.875365	30644.535357	I04Q1002	31840.422847	30643.821029		
378	3	O04Q1003	31841.578871	30645.840987	I04Q1003	31842.126354	30645.126660		
378	4	O04Q1004	31841.695770	30646.179080	I04Q1004	31842.243253	30645.464753		
378	5	O04Q1005	31839.370176	30644.703880	I04Q1005	31839.917659	30643.989553		
378	6	O04Q1006	31839.487075	30645.041973	I04Q1006	31840.034558	30644.327646		
378	7	O04Q1007	31841.190581	30646.347603	I04Q1007	31841.738064	30645.633276		
378	8	O04Q1008	31841.547438	30646.372614	I04Q1008	31842.094921	30645.658287		

383 D09O 31843.8407437 30647.9710237 60.9782012 D09I 31844.3838827 30647.2533673 60.9782013

391 MQDA 31852.3747281 30654.3541610 61.3652835 MQFA 31852.9134829 30653.6332284 61.3652836

FIDUCIALS: BNL FRAME(m)

			N(m)	E(m)		N(m)	E(m)	TOP-BL(m)	BOT-BL(m)
391	1	O04Q0901	31851.345251	30653.432619	I04Q0901	31851.884006	30652.711686	0.121920	-0.391287
391	2	O04Q0902	31851.702386	30653.453288	I04Q0902	31852.241141	30652.732356		
391	3	O04Q0903	31853.421643	30654.738107	I04Q0903	31853.960398	30654.017174		
391	4	O04Q0904	31853.542645	30655.074754	I04Q0904	31854.081399	30654.353821		
391	5	O04Q0905	31851.199283	30653.627943	I04Q0905	31851.738038	30652.907010		
391	6	O04Q0906	31851.320285	30653.964589	I04Q0906	31851.859040	30653.243657		
391	7	O04Q0907	31853.039542	30655.249408	I04Q0907	31853.578297	30654.528475		
391	8	O04Q0908	31853.396677	30655.270078	I04Q0908	31853.935432	30654.549145		

396 D08O	31858.3410974	30658.7554927	62.6042738	D08I	31858.8658197	30658.0240735	62.6042738

FIDUCIALS: BNL FRAME(m)

			N(m)	E(m)		N(m)	E(m)	TOP-BL(m)	BOT-BL(m)
396	1	O04D0801	31862.285894	30661.378811	I04D0801	31862.810616	30660.647391	0.121920	-0.391287
396	2	O04D0802	31861.269702	30660.426362	I04D0802	31861.794425	30659.694943		
396	3	O04D0803	31858.349385	30658.331296	I04D0803	31858.874107	30657.599877		
396	4	O04D0804	31855.819957	30656.516658	I04D0804	31856.344679	30655.785239		
396	5	O04D0805	31854.592122	30655.859219	I04D0805	31855.116845	30655.127799		
396	6	O04D0806	31862.147636	30661.579665	I04D0806	31862.672358	30660.848246		
396	7	O04D0807	31860.897624	30660.945002	I04D0807	31861.422347	30660.213583		
396	8	O04D0808	31857.977307	30658.849936	I04D0808	31858.502030	30658.118517		
396	9	O04D0809	31855.447879	30657.035298	I04D0809	31855.972601	30656.303879		
396	10	O04D0810	31854.446157	30656.054544	I04D0810	31854.970879	30655.323125		

402 MQFA	31864.4220837	30662.9970595	63.8432640	MQDA	31864.9323760	30662.2557077	63.8432641
410 MQ7O	31876.5481201	30671.3438233	63.8432640	MQ7I	31877.0584124	30670.6024715	63.8432641
415 D06O	31879.9027348	30673.6474706	64.2303464	D06I	31880.4085189	30672.9030158	64.2303464
421 MQ6O	31888.7515243	30679.5865155	64.6174287	MQ6I	31889.2527627	30678.8390126	64.6174288

FIDUCIALS: BNL FRAME(m)

			N(m)	E(m)		N(m)	E(m)	TOP-BL(m)	BOT-BL(m)
421	1	O04Q0601	31887.676334	30678.718743	I04Q0601	31888.177572	30677.971240	0.121920	-0.391287
421	2	O04Q0602	31888.034058	30678.721149	I04Q0602	31888.535297	30677.973646		
421	3	O04Q0603	31889.816679	30679.916503	I04Q0603	31890.317917	30679.169000		
421	4	O04Q0604	31889.954712	30680.246532	I04Q0604	31890.455951	30679.499029		
421	5	O04Q0605	31887.540531	30678.921265	I04Q0605	31888.041769	30678.173762		
421	6	O04Q0606	31887.678565	30679.251294	I04Q0606	31888.179803	30678.503791		
421	7	O04Q0607	31889.461185	30680.446647	I04Q0607	31889.962423	30679.699145		
421	8	O04Q0608	31889.818909	30680.449054	I04Q0608	31890.320147	30679.701551		

428 D05O	31894.9293922	30683.6821488	65.7590119	D05I	31895.4108911	30682.9386962	65.5250835
434 MQ5O	31901.2090167	30687.6199883	66.9005950	MQ5I	31901.6570969	30686.9028940	66.4327383

FIDUCIALS: BNL FRAME(m)

			N(m)	E(m)		N(m)	E(m)	TOP-BL(m)	BOT-BL(m)
434	1	O04Q0501	31900.103403	30686.791326	I04Q0501	31900.557603	30686.066129	0.121920	-0.391287
434	2	O04Q0502	31900.460983	30686.780904	I04Q0502	31900.915250	30686.058335		
434	3	O04Q0503	31902.285318	30687.911571	I04Q0503	31902.731226	30687.202378		
434	4	O04Q0504	31902.435097	30688.236438	I04Q0504	31902.878614	30687.528338		
434	5	O04Q0505	31899.974948	30686.998588	I04Q0505	31900.427629	30686.272441		
434	6	O04Q0506	31900.124727	30687.323455	I04Q0506	31900.575016	30686.598400		
434	7	O04Q0507	31901.949062	30688.454121	I04Q0507	31902.390992	30687.742443		
434	8	O04Q0508	31902.306642	30688.443700	I04Q0508	31902.748639	30687.734650		

444 MQ4O	31907.5669457	30691.5604373	66.9005950	MQ4I	31907.9858958	30690.8899611	66.4327383
452 MQ3O	31941.9646194	30712.8790580	66.9005950	MQ3I	31942.2259697	30712.4607953	66.4327383
456 MQ2O	31945.7861768	30715.2475418	66.9005950	MQ2I	31946.0300179	30714.8572998	66.4327383
460 MQ1O	31949.3272373	30717.4421822	66.9005950	MQ1I	31949.5548543	30717.0779042	66.4327383
463 D00O	31952.5430488	30719.4272030	67.3839884	D00I	31952.7487052	30719.0980693	65.9493449
466 D0XO	31961.6728440	30724.9135754	67.2670242	D0XI	31961.6820836	30724.8987757	66.0663091
469 MCR	31971.5573017	30731.0797590	66.6666667	MCR	31971.5573077	30731.0797627	66.6666666
471 D0XO	31981.4325199	30737.2607424	66.0663091	D0XI	31981.4417714	30737.2459500	67.2670242
474 D00O	31990.3658982	30743.0614488	65.9493449	D00I	31990.5715666	30742.7323225	67.3839884
478 MQ1O	31993.5597492	30745.0816138	66.4327383	MQ1I	31993.7873781	30744.7173432	66.9005950
482 MQ2O	31997.0845856	30747.3022183	66.4327383	MQ2I	31997.3284386	30746.9119837	66.9005950
486 MQ3O	32000.8886337	30749.6987228	66.4327383	MQ3I	32001.1499959	30749.2804674	66.9005950
494 MQ4O	32035.1287076	30771.2695570	66.4327383	MQ4I	32035.5476696	30770.5990882	66.9005950
504 MQ5O	32041.4575066	30775.2566241	66.4327383	MQ5I	32041.9055987	30774.5395372	66.9005950

FIDUCIALS: BNL FRAME(m)

	N(m)	E(m)		N(m)	E(m)	TOP-BL(m)	BOT-BL(m)

504	1	O03Q0501	32042.686975	30775.887077	I03Q0501	32043.139667	30775.160938	0.121920	-0.391287
504	2	O03Q0502	32042.539588	30775.561118	I03Q0502	32042.989888	30774.836071		
504	3	O03Q0503	32040.723612	30774.417075	I03Q0503	32041.165554	30773.705404		
504	4	O03Q0504	32040.365964	30774.424868	I03Q0504	32040.807973	30773.715826		
504	5	O03Q0505	32042.557001	30776.093389	I03Q0505	32043.011213	30775.368200		
504	6	O03Q0506	32042.199353	30776.101183	I03Q0506	32042.653632	30775.378621		
504	7	O03Q0507	32040.383377	30774.957140	I03Q0507	32040.829297	30774.247955		
504	8	O03Q0508	32040.235990	30774.631180	I03Q0508	32040.679519	30773.923087		

509 D05O	32047.7496334	30779.1744556	67.5743215	D05I	32048.2067662	30778.4157774	67.8082498
517 MQ6O	32054.1389766	30782.9316562	68.7159046	MQ6I	32054.5910966	30782.1534608	68.7159046

FIDUCIALS: BNL FRAME(m)

			N(m)	E(m)		N(m)	E(m)	TOP-BL(m)	BOT-BL(m)
517	1	O03Q0601	32055.390260	30783.517620	I03Q0601	32055.842380	30782.739424	0.121920	-0.391287
517	2	O03Q0602	32055.231280	30783.197155	I03Q0602	32055.683400	30782.418960		
517	3	O03Q0603	32053.375450	30782.118962	I03Q0603	32053.827570	30781.340766		
517	4	O03Q0604	32053.018312	30782.139574	I03Q0604	32053.470432	30781.361378		
517	5	O03Q0605	32055.267767	30783.728460	I03Q0605	32055.719887	30782.950264		
517	6	O03Q0606	32054.910629	30783.749072	I03Q0606	32055.362749	30782.970877		
517	7	O03Q0607	32053.054800	30782.670879	I03Q0607	32053.506919	30781.892683		
517	8	O03Q0608	32052.895819	30782.350414	I03Q0608	32053.347939	30781.572218		

522 D06O	32063.3560278	30788.2813568	69.1029870	D06I	32063.8034155	30787.5004120	69.1029869
528 MQ7O	32066.8971058	30790.2865994	69.4900693	MQ7I	32067.3397281	30789.5029630	69.4900692
536 MQFA	32079.7148576	30797.5263827	69.4900693	MQDA	32080.1574800	30796.7427462	69.4900692
541 D08O	32086.1928944	30801.1325334	70.7290595	D08I	32086.6202637	30800.3402816	70.7290595

FIDUCIALS: BNL FRAME(m)

			N(m)	E(m)		N(m)	E(m)	TOP-BL(m)	BOT-BL(m)
541	1	O03D0801	32090.439498	30803.232432	I03D0801	32090.866867	30802.440180	0.121920	-0.391287
541	2	O03D0802	32089.310346	30802.417068	I03D0802	32089.737715	30801.624816		
541	3	O03D0803	32086.147124	30800.710732	I03D0803	32086.574493	30799.918480		
541	4	O03D0804	32083.407304	30799.232792	I03D0804	32083.834674	30798.440540		
541	5	O03D0805	32082.105778	30798.736975	I03D0805	32082.533148	30797.944723		
541	6	O03D0806	32090.327929	30803.449250	I03D0806	32090.755298	30802.656998		
541	7	O03D0807	32089.007305	30802.978847	I03D0807	32089.434675	30802.186595		
541	8	O03D0808	32085.844083	30801.272511	I03D0808	32086.271453	30800.480259		
541	9	O03D0809	32083.104264	30799.794571	I03D0809	32083.531633	30799.002319		
541	10	O03D0810	32081.985861	30798.949290	I03D0810	32082.413230	30798.157038		

547 MQDA 32092.7642815 30804.5656304 71.9680498 MQFA 32093.1760740 30803.7653633 71.9680497

FIDUCIALS: BNL FRAME(m)

			N(m)	E(m)		N(m)	E(m)	TOP-BL(m)	BOT-BL(m)
547	1	O03Q0901	32094.043853	30805.086936	I03Q0901	32094.455646	30804.286669	0.121920	-0.391287
547	2	O03Q0902	32093.868717	30804.775007	I03Q0902	32094.280509	30803.974740		
547	3	O03Q0903	32091.960253	30803.792983	I03Q0903	32092.372046	30802.992716		
547	4	O03Q0904	32091.604634	30803.831805	I03Q0904	32092.016426	30803.031538		
547	5	O03Q0905	32093.932286	30805.303756	I03Q0905	32094.344079	30804.503489		
547	6	O03Q0906	32093.576666	30805.342577	I03Q0906	32093.988459	30804.542310		
547	7	O03Q0907	32091.668203	30804.360554	I03Q0907	32092.079995	30803.560286		
547	8	O03Q0908	32091.493066	30804.048625	I03Q0908	32091.904859	30803.248358		

554 D09O 32102.2424771 30809.4377078 72.3551321 D09I 32102.6494031 30808.6349364 72.3551321

560 MQF 32105.9618498 30811.2997213 72.7422145 MQD 32106.3638792 30810.4945052 72.7422144

FIDUCIALS: BNL FRAME(m)

			N(m)	E(m)		N(m)	E(m)	TOP-BL(m)	BOT-BL(m)
560	1	O03Q1001	32107.247666	30811.805429	I03Q1001	32107.649696	30811.000212	0.121920	-0.391287
560	2	O03Q1002	32107.068749	30811.495652	I03Q1002	32107.470779	30810.690436		
560	3	O03Q1003	32105.148485	30810.536909	I03Q1003	32105.550515	30809.731692		
560	4	O03Q1004	32104.793364	30810.580052	I03Q1004	32105.195394	30809.774836		
560	5	O03Q1005	32107.138744	30812.023589	I03Q1005	32107.540773	30811.218373		
560	6	O03Q1006	32106.783622	30812.066732	I03Q1006	32107.185652	30811.261516		
560	7	O03Q1007	32104.863358	30811.107988	I03Q1007	32105.265388	30810.302772		
560	8	O03Q1008	32104.684442	30810.798212	I03Q1008	32105.086471	30809.992996		

567 D10O 32112.6155743 30814.5703838 73.9812047 D10I 32113.0019307 30813.7573424 73.9812046

FIDUCIALS: BNL FRAME(m)

			N(m)	E(m)		N(m)	E(m)	TOP-BL(m)	BOT-BL(m)
567	1	O03D1001	32116.963864	30816.450701	I03D1001	32117.350220	30815.637660	0.121920	-0.391287
567	2	O03D1002	32115.794550	30815.694058	I03D1002	32116.180906	30814.881017		
567	3	O03D1003	32112.548325	30814.151470	I03D1003	32112.934682	30813.338428		
567	4	O03D1004	32109.736613	30812.815359	I03D1004	32110.122969	30812.002318		
567	5	O03D1005	32108.411467	30812.386648	I03D1005	32108.797824	30811.573607		
567	6	O03D1006	32116.863511	30816.672934	I03D1006	32117.249868	30815.859892		
567	7	O03D1007	32115.520591	30816.270578	I03D1007	32115.906947	30815.457537		
567	8	O03D1008	32112.274366	30814.727990	I03D1008	32112.660722	30813.914949		
567	9	O03D1009	32109.462654	30813.391879	I03D1009	32109.849010	30812.578838		
567	10	O03D1010	32108.302547	30812.604810	I03D1010	32108.688904	30811.791768		