C-A/AP/#231
March 2006

Warm Calibration Measurements of the 1.3 GHz Electron Gun

H. Hahn

Collider-Accelerator Department
Brookhaven National Laboratory
Upton, NY 11973

H. Hahn
March 10, 2006

CALIBRATION MEASUREMENTS of the 1.3 GHz ELECTRON GUN

Introduction

The ongoing ERL research effort directed at e-cooling of RHIC beams requires a high-brightness high-current electron gun [1] While different approaches to achieving the requirements exist, the Brookhaven solution is based on a high-Q superconducting cavity. A 700 MHz superconducting electron injector is being constructed by the Advanced Energy Systems company and will be delivered in 2007. Awaiting its availability, 1.3 GHz Nb cavities shown in Fig. 1 are used for all relevant studies, such as properties of the superconductor and the semiconductor photocathode [2].

Fig. 1. 1.3 GHz Nb Cavities

The cavities are fabricated entirely from Nb [3]. Each cavity has a single beam pipe port and two additional coupler ports for the feed and pick-up coupler on the beam pipe. Accurate results for the electric field at operating conditions depends on the calibration of the pick-up probe. This calibration was done previously by a low-level room temperature measurement of the power delivered into the cavity and the power transmitted through the pick-up coupler. One of the two cavities was modified by adding a photocathode deposition stub as shown in Fig. 2.

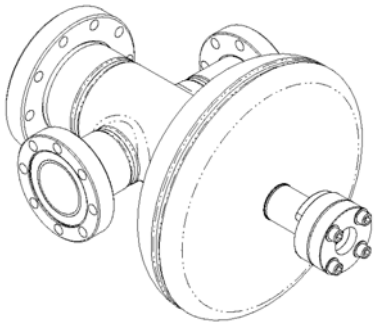

Fig. 2. Cavity with added choke joint.

This provided the opportunity for a pick-up coupler calibration with significantly increased accuracy presented in this report. By feeding the cavity through this port one can achieve a fully matched condition without field distortion in the other port region. The coupling strength of the pick-up probe follows from a direct S21 transmission measurement with a network analyzer. This method and the calibration results are the topic of the note.

Warm Measurements

The measurements were performed using a 50 Ω coaxial cable entering the cavity through the choke joint. The solid copper coax has a 1 cm O.D. to simulate the choke joint geometry and the center conductor protrudes the cable by ~1 cm. The penetration into the cavity is adjustable and used to achieve critical coupling. The input coupling strength has now been determined by also using the S11 phase method as described in the section below. The results presented here were obtained with recalibrated network analyzer 8753C which took out the losses in the instrument cables.

Cavity

The cavity resonance frequency is found from the minimum in the S11 amplitude to be

$$f_0 = 1{,}295.74 \text{ MHz}$$

with

$$S_{11dB} = \text{-52 dB or } S_{21} = 2.5\times10^{-3}.$$

The phase response indicates an under-coupled case, so that the coaxial cable coupling parameter is

$$\beta_C = \frac{1-S_{11}}{1+S_{11}} = \frac{1-0.0025}{1+0.0025} \approx 0.995$$

Alternatively, the relevant data for the reflection scattering coefficient from the cavity input is found from the phase difference between the two extrema,

$$\Phi = 167.8 / 2 = 83.8^{\circ}$$

leading, in remarkable agreement, to the coupling

$$\beta_C = \frac{\tan\Phi}{\sqrt{1+\tan^2\Phi}} = 0.994$$

Feed Coupler

The loaded Q_L and then, together with the β_C, the internal quality factor Q_0 of the cavity is obtained from the forward transmission coefficient S_{21} between input and the "Feed" coupler. "Feed" coupler refers to the input coupler when the cavity is in operation.

The 3dB bandwidth is measured as

$$2\Delta f_{3dB} = 0.384 \text{ MHz } (\pm 0.5\ \%),$$

resulting in $Q_L = 3374$ and the internal

$$Q_0 = (1+\beta_C+\beta_F+\beta_{PU})Q_L = 6728$$

since β_F and β_{PU} can here be neglected.

The external Q_E of the feed coupler is obtained from the S_{21} measurement

$$S_{21dB} = \text{-}44.1 \pm 0.2 \text{ dB or } S_{21} = 6.24\times10^{-3}$$

From the definition for the external coupling coefficient

$$\beta_F = \frac{P_F}{P_C} = \frac{S_{21}^2}{1-S_{11}^2} = \frac{38.9\times10^{-6}}{1.00} = 38.9\times10^{-6}$$

The external Q of the feed coupler now follows as

$$Q_F = \frac{Q_0}{\beta_F} = 1.73\times10^8$$

Pick up Coupler

Same procedure (with average over 16 sweeps, 30 Hz IF, and smoothing over 10 kHz) yields for the pick-up coupler

$$S_{21dB} = \text{-}75 \pm 0.2 \text{ dB or } S_{21} = 1.78\times10^{-4}, \text{ and } \beta_{PU} = 3.16\times10^{-8}.$$

The pick–up external quality factor is now

$$Q_{PU} = 2.13\times10^{11}$$

Cross Coupling

Feed coupler and pick-up coupler are both connected to the single beam tube in this cavity and cross coupling is a concern [4]. The S21 measurement from feed to pick-up coupler show no measurable signal.

2nd Feed Coupler

Feed coupler modified by Kneisel measured in the same cavity.

$$f_0 = 1295.81 \text{ MHz}, \; 2\Delta f_{3dB} = 384.3$$

$$S_{21dB} = \text{-}55.94 \text{ or } S_{21} = 1.60\times10^{-3} \text{ (10 kHz smoothing)}$$

$$Q_{F2} = 2.64\times10^9$$

2nd Pick up Coupler

and the associated modified probe

$$S_{21dB} = \text{-}62.3 \text{ dB or } S_{21} = 7.64\times10^{-4} \text{ (20 kHz smoothing)}$$

$$Q_{PU2} = 1.15\times10^{10}$$

Projected low-temperature measurements

During low-temperature operation, the cavity is powered via the Feed coupler, which has the known temperature–independent external Q_F from the warm measurement. A network analyzer provides a low-level loaded quality factor Q_L from the S_{21} between feed and pick-up. The internal Q is found from

$$\frac{1}{Q_0} = \frac{1}{Q_L} - \frac{1}{Q_F} - \frac{1}{Q_{PU}} \approx \frac{1}{Q_L} - \frac{1}{Q_F}$$

For electric field measurement at high power, the power source is connected to the cavity using a directional coupler with which the incoming power P_E (and reflected power) is measured. From this measurement, the operational coupling coefficient β'_F at cold temperature (different from the warm β_F) is determined, and the power dissipated in the cavity is then given by

$$P_C = \frac{4\beta'_F}{\left(1+\beta'_F\right)^2} P_F$$

A low level S_{11} now provides the coupling factor at low field, β'_F which can serve as verification of the directional coupler result for the power dissipated in the cavity. Any difference is attributable to field emission or multipacting.

Superfish simulations provide the relationship between peak electric field on the cathode and the power dissipated in the cavity, (courtesy Y. Zhao)

$$E_0 = 1.59\times10^6\sqrt{P_C} \text{ [V/m]}$$

Alternatively, the electric field can be obtained from a power measurement at the pick-up coupler, P_{PU} according to

$$E_0 = 1.59\times10^6\sqrt{\frac{Q_{PU}}{Q_F}P_{PU}} = 55.8\times10^6\sqrt{P_{PU}}$$

Although the signal level at the pick-up is about three orders of magnitude smaller than the feed signal, it provides a correct measurement of the electric field even in the presence of other losses due to field emission or multipacting.

Coupling coefficient from S11 measurement

The S_{11} reflection coefficient of a resonate cavity with unloaded Q_0 at the resonance f_0 and driven by the power source with is given by the generalized expression

$$S_{11} = \frac{\beta-\left(1-j\delta\right)}{\beta+\left(1+j\delta\right)}$$

with the coupling parameter β and the frequency shift from the resonance, normalized to the half-3dB bandwidth of the unloaded cavity,

$$\delta = \frac{\Delta f}{\left(\Delta f\right)_{3dB}}$$

where

$$\left(\Delta f\right)_{3dB} = \frac{f_0}{2Q_0}$$

Assuming an under-coupled driven cavity, the coupling parameter is found from the minimum of the amplitude of S_{11} at the resonance,

$$\beta = \frac{1-(S_{11})_{f_0}}{1+(S_{11})_{f_0}}$$

Alternatively, and better for a close to critically coupled cavity, the coupling parameter can be found from the phase response of the reflection,

$$\varphi = \text{atan}\frac{2\beta\delta}{1\text{-}\beta^2+\delta^2}$$

The phase in vicinity of the resonance is almost S-shaped with easily determined extrema of the phase Φ at $\delta_\Phi = \pm\sqrt{1-\beta^2}$. The value of the phase extremum is independent of the quality factor and is found to be

$$\Phi = \text{atan}\left(\frac{\beta}{\sqrt{1-\beta^2}}\right)$$

which is measured in the network analyzer with great accuracy. The coupling parameter now follows from

$$\beta = \frac{\tan\Phi}{\sqrt{1+\tan^2\Phi}}$$

Acknowledgements

The need for the calibration measurements were pointed out and the measuring procedure was suggested by Ilan Ben-Zvi. The Superfish computations were made by Y. Zhao. The adjustable coax-cable probes were provided by R. Sikora from the C-A Instrumentation Division.

References

1. I. Ben-Zvi et al., Proc. PAC 2005, p.2741
2. T. Rao et al., Proc. PAC 2005, p.2556
3. M. Cole et al., Proc. PAC 2005, p.3514
4. Y. Zhao and M. Cole, Proc PAC 2003, p. 2050