AGS POLARIZED PROTON QUADS PULSER PROJECT PROPOSAL

BUDGET ESTIMATE

Jon Sandberg, Arlene Zhang

August 13, 2008

Critical Concerns

- Magnet coil voltage limitation
  - Tight space between coil and laminated core (~ 20 μm)
  - Single turn leads to lower conductor voltage
- High thermo dissipation
  - High current
  - High repetition rate
  - Long pulse duration
  - Long cable connection

Critical Concerns

- High energy storage
  - Large capacitor banks
- Tunnel Space
- Building Space and Infrastructure
- Cost

Critical Design Requirements

- Pulsers will be located in service buildings
- Low resistance design
  - Transmission cable length shall be as short as possible
  - Devices shall have low internal resistance
  - Magnet conductor shall be low resistance
- Low inductance design
  - Coaxial transmission cable
  - Single turn magnet

System Layout

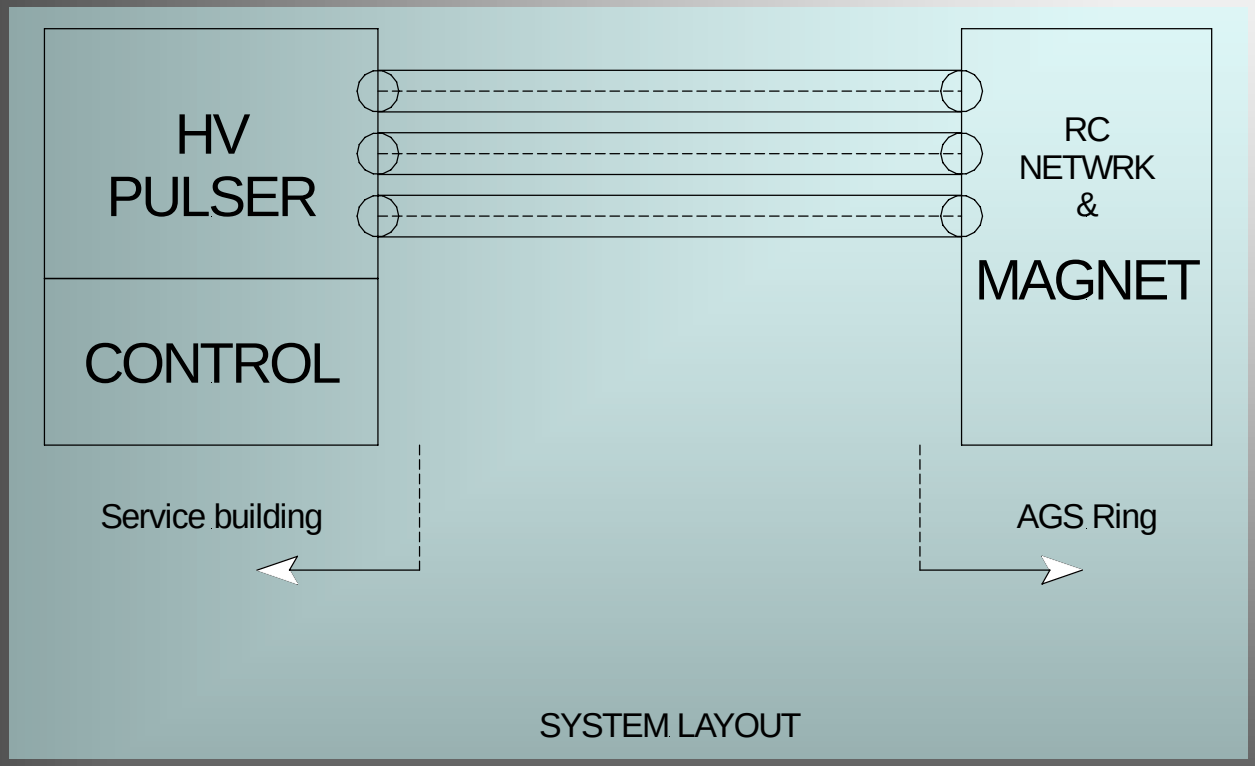

Updated Simulation Circuit

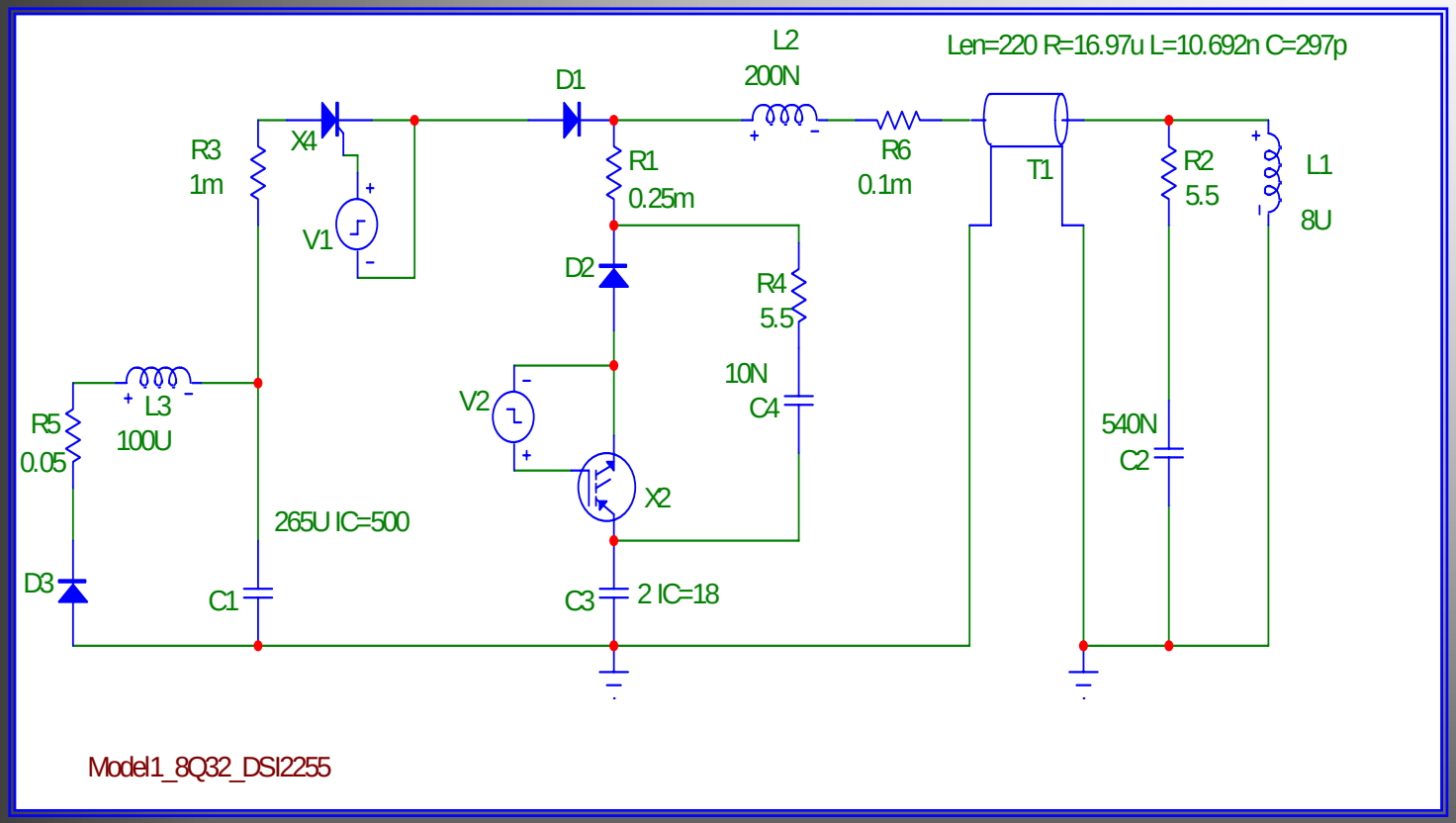

Simulated with SC 2255 cable parameters

Updated Simulation Result

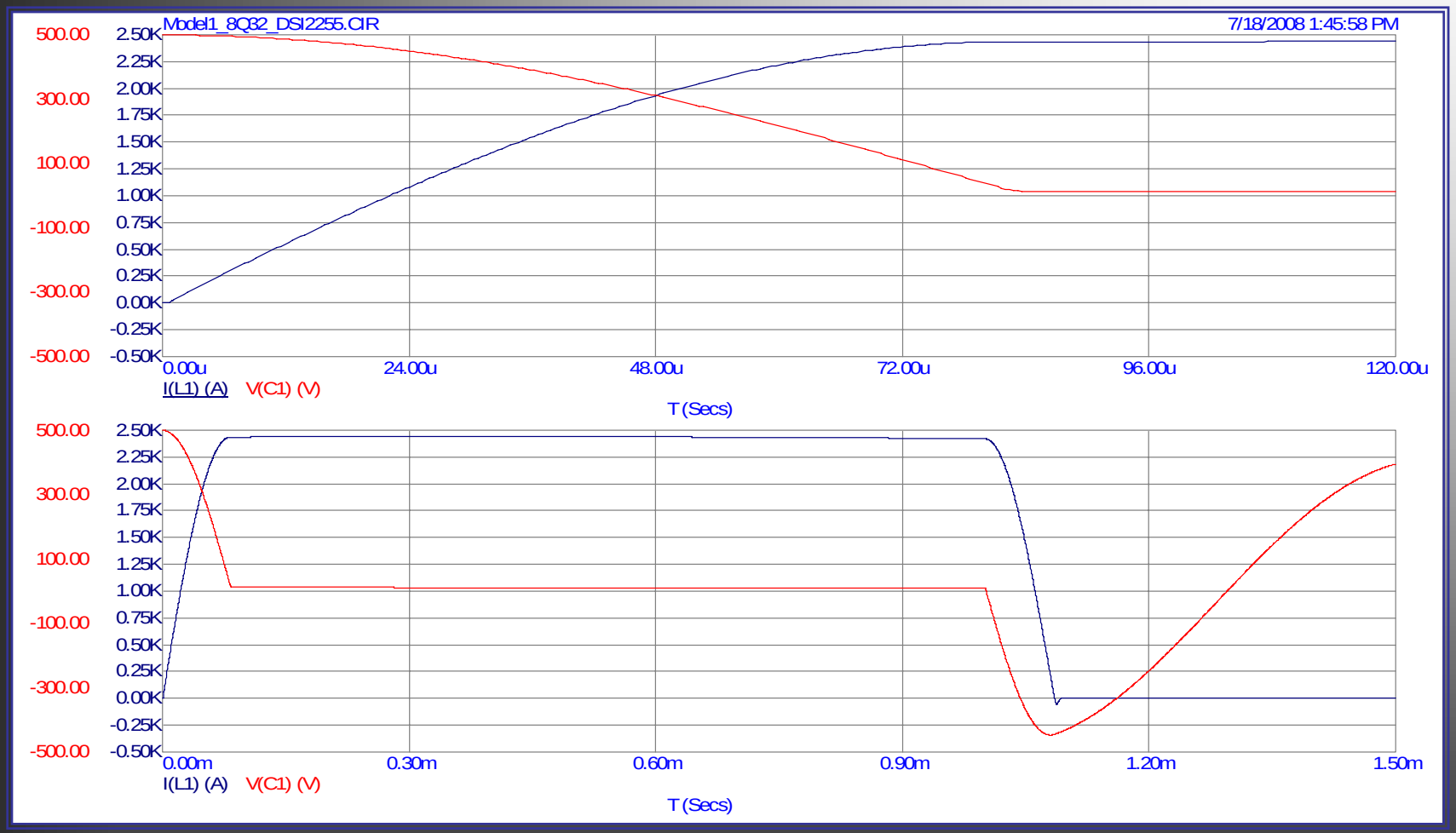

Critical Components Availability

- High voltage, high current, pulse cable
- High voltage capacitor bank
- High voltage power supply
- Solid State switches and diode
- Low voltage dc capacitor bank
- Low voltage high current power supply

High Voltage Cable

- Dielectric Sciences 2255
- Center conductor AWG #0000
- Return conductor AWG equiv. #0000
- Impedance 18 ohm
- Three cable in parallel

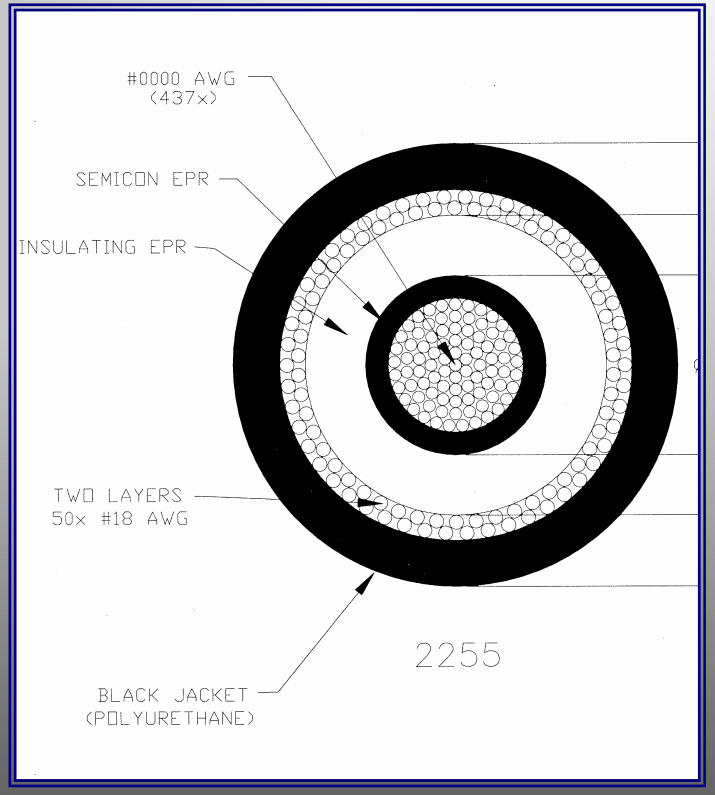

High Voltage Capacitor

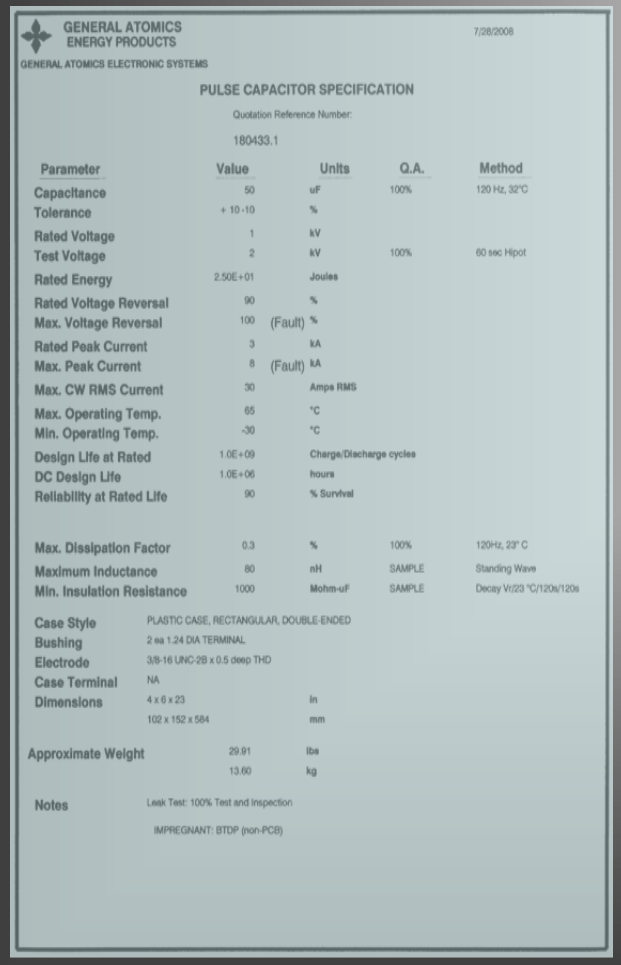

GENERAL ATOMICS
ENERGY PRODUCTS

GENERAL ATOMICS ELECTRONIC SYSTEMS

7/28/2008

PULSE CAPACITOR SPECIFICATION

Quotation Reference Number:

180433.1

Parameter	Value	Units	Q.A.	Method
Capacitance	50	uF	100%	120 Hz, 32°C
Tolerance	+ 10 -10	%		
Rated Voltage	1	kV		
Test Voltage	2	kV	100%	60 sec Hipot
Rated Energy	2.50E+01	Joules		
Rated Voltage Reversal	90	%		
Max. Voltage Reversal	100 (Fault)	%		
Rated Peak Current	3	kA		
Max. Peak Current	8 (Fault)	kA		
Max. CW RMS Current	30	Amps RMS		
Max. Operating Temp.	65	°C		
Min. Operating Temp.	-30	°C		
Design Life at Rated	1.0E+09	Charge/Discharge cycles		
DC Design Life	1.0E+06	hours		
Reliability at Rated Life	90	% Survival		
Max. Dissipation Factor	0.3	%	100%	120Hz, 23° C
Maximum Inductance	80	nH	SAMPLE	Standing Wave
Min. Insulation Resistance	1000	Mohm-uF	SAMPLE	Decay Vr/23 °C/120s/120s

Case Style	PLASTIC CASE, RECTANGULAR, DOUBLE-ENDED	
Bushing	2 ea 1.24 DIA TERMINAL	
Electrode	3/8-16 UNC-2B x 0.5 deep THD	
Case Terminal	NA	
Dimensions	4 x 6 x 23	in
	102 x 152 x 584	mm
Approximate Weight	29.91	lbs
	13.60	kg

Notes: Leak Test: 100% Test and Inspection

IMPREGNANT: BTDP (non-PCB)

- General Atomics
- Reputable high energy capacitor vendor
- Suitable Operation margin

Major Components Cost

Major components cost

~ $76 k per pulser

~ $152 k for two pulsers

+ 30% contingency

Delivery

3 to 4 months

AGS Polarized Proton Major Components Cost Estimate					
		Qty	Unit	Unit Price	Amount
SCR	Powerex				
	T9G0181003DH	1	EA	$ 254.40	$ 254.40
IGBT					
	SKM500GA123D	4	EA	$ 321.14	$ 1,284.56
IGBT driver					
	SKYPER 32 Pro	2	EA	$ 201.73	$ 403.46
Diode					
	SKN 240/16	3	EA	$ 52.39	$ 157.17
HV Capacitor					
	GA 180433.1	5	EA	$ 875.00	$ 4,375.00
LV Capacitor					
	CGS				
	CGS124U025X4C	10	EA	$ 34.82	$ 348.20
HV Power Supply					
	750V,15000J	1	EA	$ 20,000.00	$ 20,000.00
LV Power Supply					
	30V, 12000J	1	EA	$ 15,000.00	$ 15,000.00
Cable					
	DS 2255	750	ft	$ 45.30	$ 33,975.00
	One unit				$ 75,797.79
	Two units				**$ 151,595.58**