General System Overview

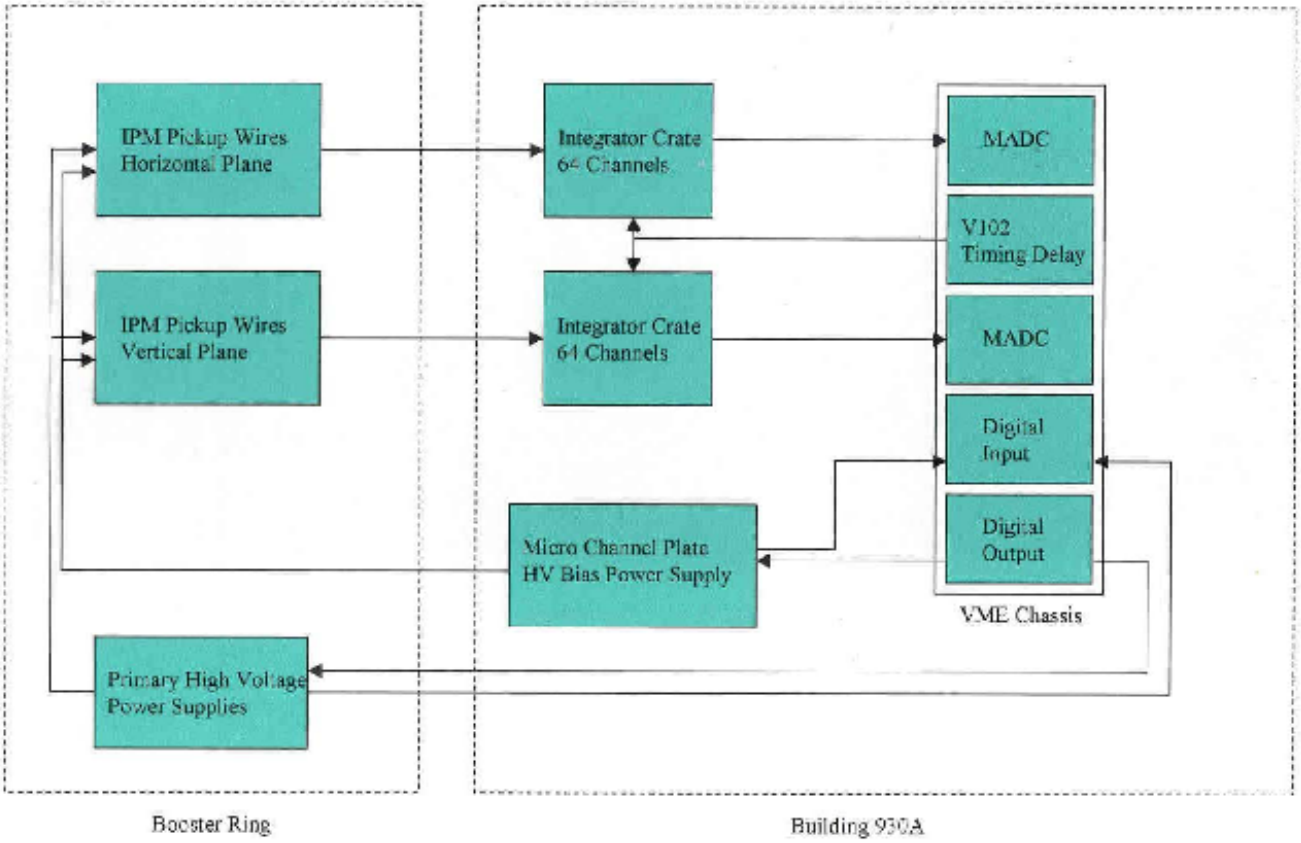

System Control and Status Readback

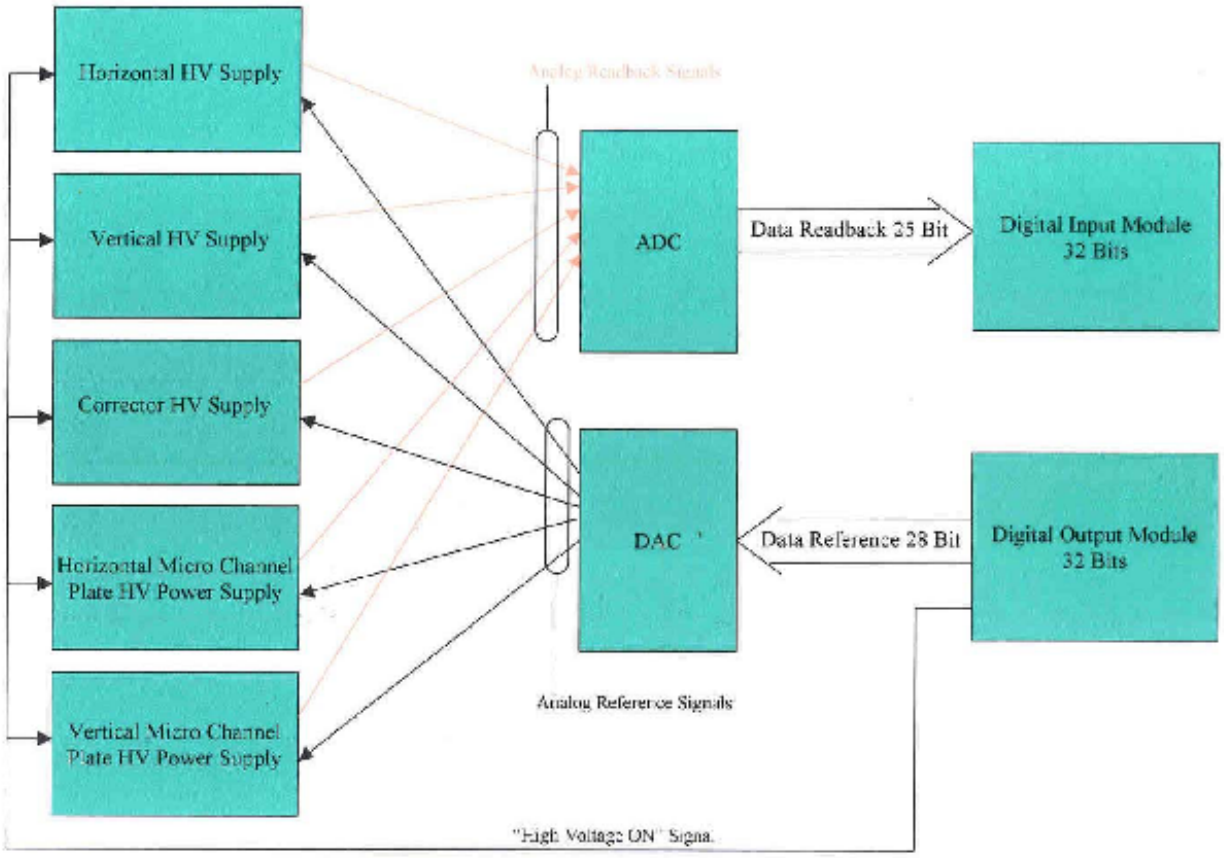
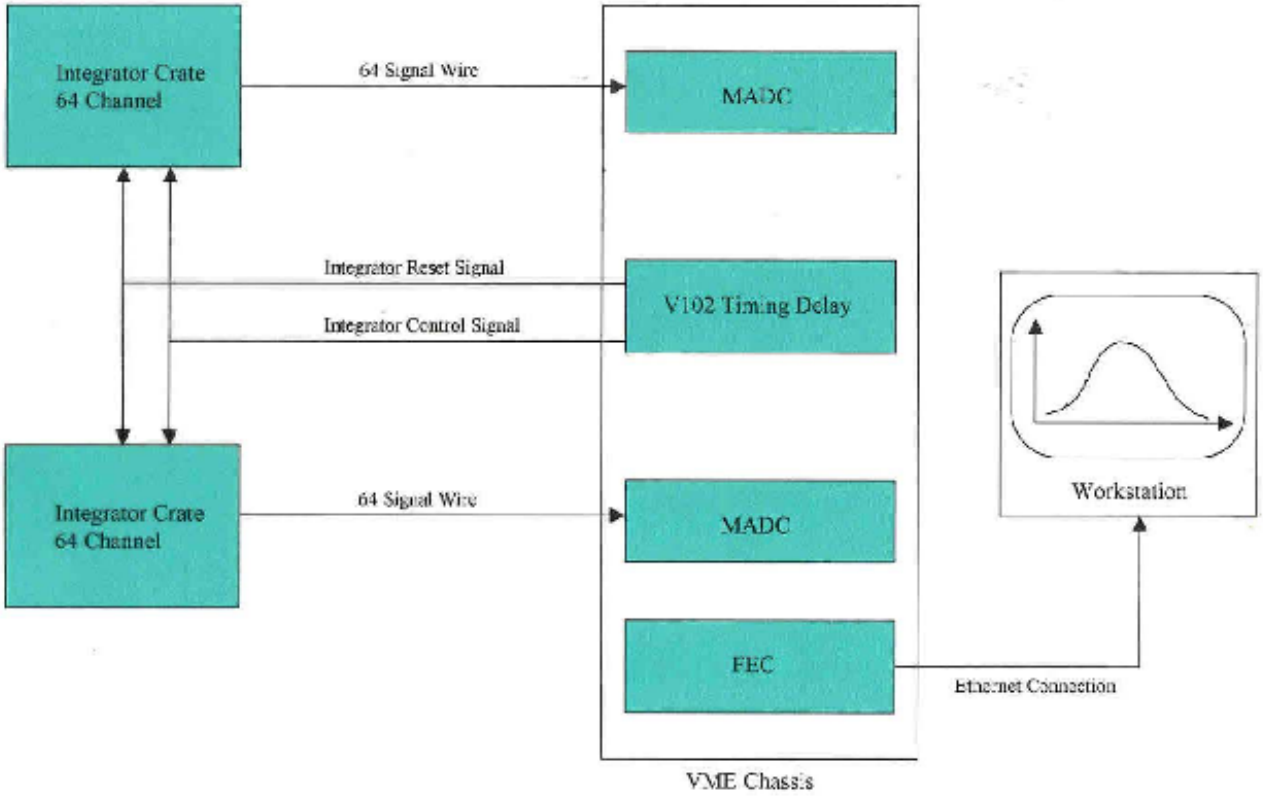
Data Timing and Data Readback