BAF Controls

BAF controls fall into 4 categories

1. **Power Supplies**
   a. **State control and DC reference for beam line power supplies**
   b. **State control and Function reference for extraction power supplies.**

2. **Instrumentation**
   a. **Retrieving data from various instrumentation devices**
   b. **Control and status of instrumentation actuators**
   c. **Control and position of stepper motors for collimators, foil strippers, and septa**
   d. **Control and status of various instrumentation electronics gains**

3. **Vacuum**
   a. **Gauge controls**
   b. **Ion pump controls**
   c. **Valve controls**

4. **Control of beam delivery**
   a. **Beam permit and abort**

BAF Controls

BAF controls are distributed in several locations

1. 958 - BAF experimental bldg
   a. Beam permit

2. 957 – beam line power supply bldg
   a. Beam line power supplies
   b. Beam line Vacuum
   c. Instrumentation

3. 930A
   a. Spill servo
   b. D6 and D3 Septum
   c. Steerers
   d. Instrumentation

4. 930UEB
   a. Bumps
   b. Dump Bump
   c. Sextupoles
   d. Tune trims
   e. Booster vacuum

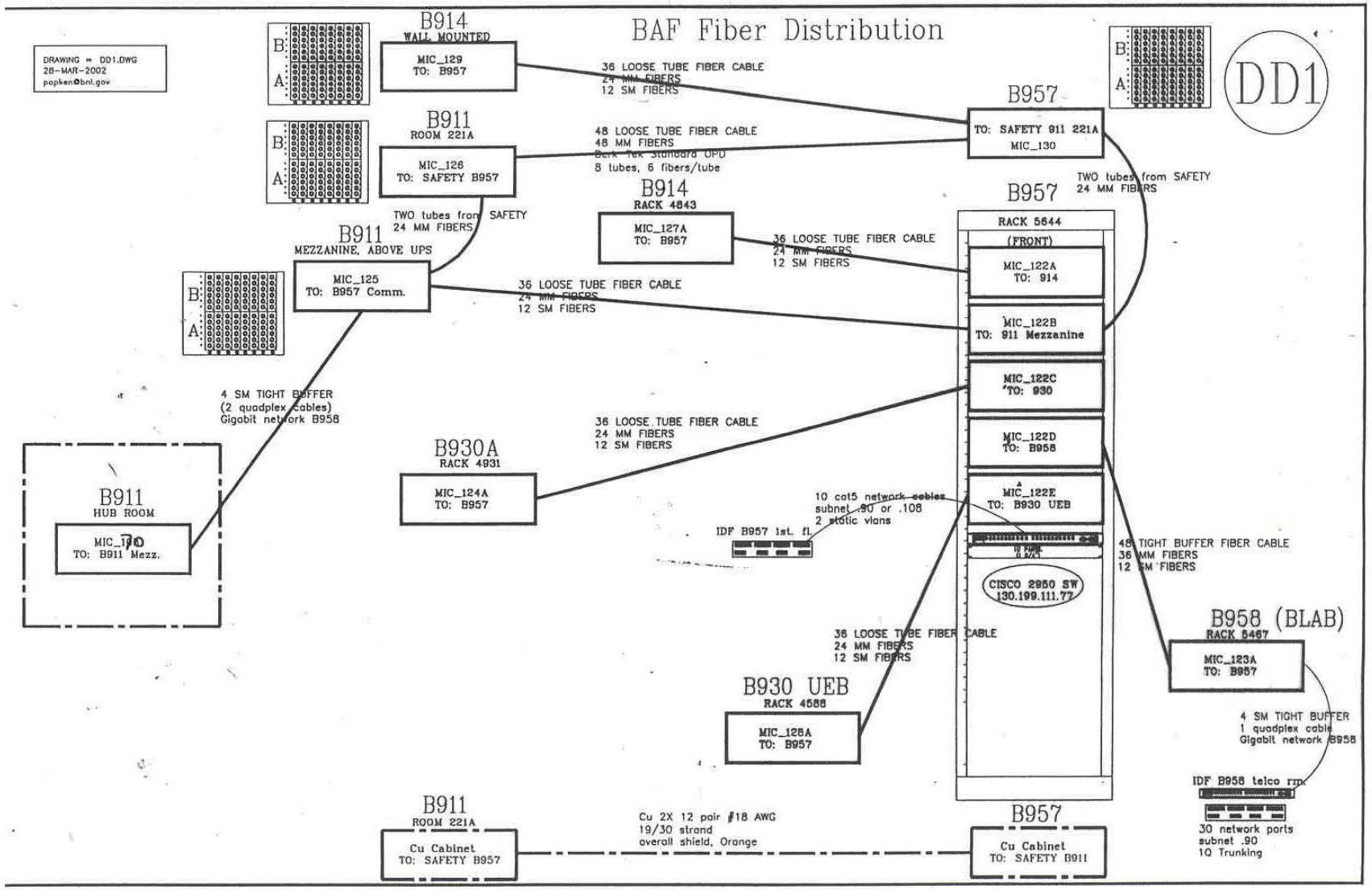
BAF Fiber Distribution
DD1
DRAWING = DD1.DWG
28-MAR-2002
popken@bnl.gov
B914
WALL MOUNTED
MIC_129
TO: B957
36 LOOSE TUBE FIBER CABLE
24 MM FIBERS
12 SM FIBERS
B911
ROOM 221A
MIC_126
TO: SAFETY B957
48 LOOSE TUBE FIBER CABLE
48 MM FIBERS
Berk-Tek Standard OPD
8 tubes, 6 fibers/tube
B914
RACK 4843
MIC_127A
TO: B957
36 LOOSE TUBE FIBER CABLE
24 MM FIBERS
12 SM FIBERS
B911
MEZZANINE, ABOVE UPS
MIC_125
TO: B957 Comm.
TWO tubes from SAFETY
24 MM FIBERS
36 LOOSE TUBE FIBER CABLE
24 MM FIBERS
12 SM FIBERS
4 SM TIGHT BUFFER
(2 quadplex cables)
Gigabit network B958
B911
HUB ROOM
MIC_130
TO: B911 Mezz.
B930A
RACK 4931
MIC_124A
TO: B957
36 LOOSE TUBE FIBER CABLE
24 MM FIBERS
12 SM FIBERS
B957
TO: SAFETY 911 221A
MIC_130
TWO tubes from SAFETY
24 MM FIBERS
B957
RACK 5644
(FRONT)
MIC_122A
TO: 914
MIC_122B
TO: 911 Mezzanine
MIC_122C
TO: 930
MIC_122D
TO: B958
MIC_122E
TO: B930 UEB
CISCO 2950 SW
130.199.111.77
10 cat5 network cables
subnet .90 or .108
2 static vlans
IDF B957 1st. fl.
45 TIGHT BUFFER FIBER CABLE
36 MM FIBERS
12 SM FIBERS
36 LOOSE TUBE FIBER CABLE
24 MM FIBERS
12 SM FIBERS
B930 UEB
RACK 4588
MIC_128A
TO: B957
B958 (BLAB)
RACK 5487
MIC_123A
TO: B957
4 SM TIGHT BUFFER
1 quadplex cable
Gigabit network B958
IDF B958 telco rm.
30 network ports
subnet .90
1Q Trunking
B911
ROOM 221A
Cu Cabinet
TO: SAFETY B957
Cu 2X 12 pair #18 AWG
19/30 strand
overall shield, Orange
B957
Cu Cabinet
TO: SAFETY B911

N
T5
T6
T7
T8
VACUUM
SEC
SEC
CONTROL
INSTRUMENTATION
I
T1
T2
T3
T4
MON
MAG
D1-2
OPEN TO BELOW

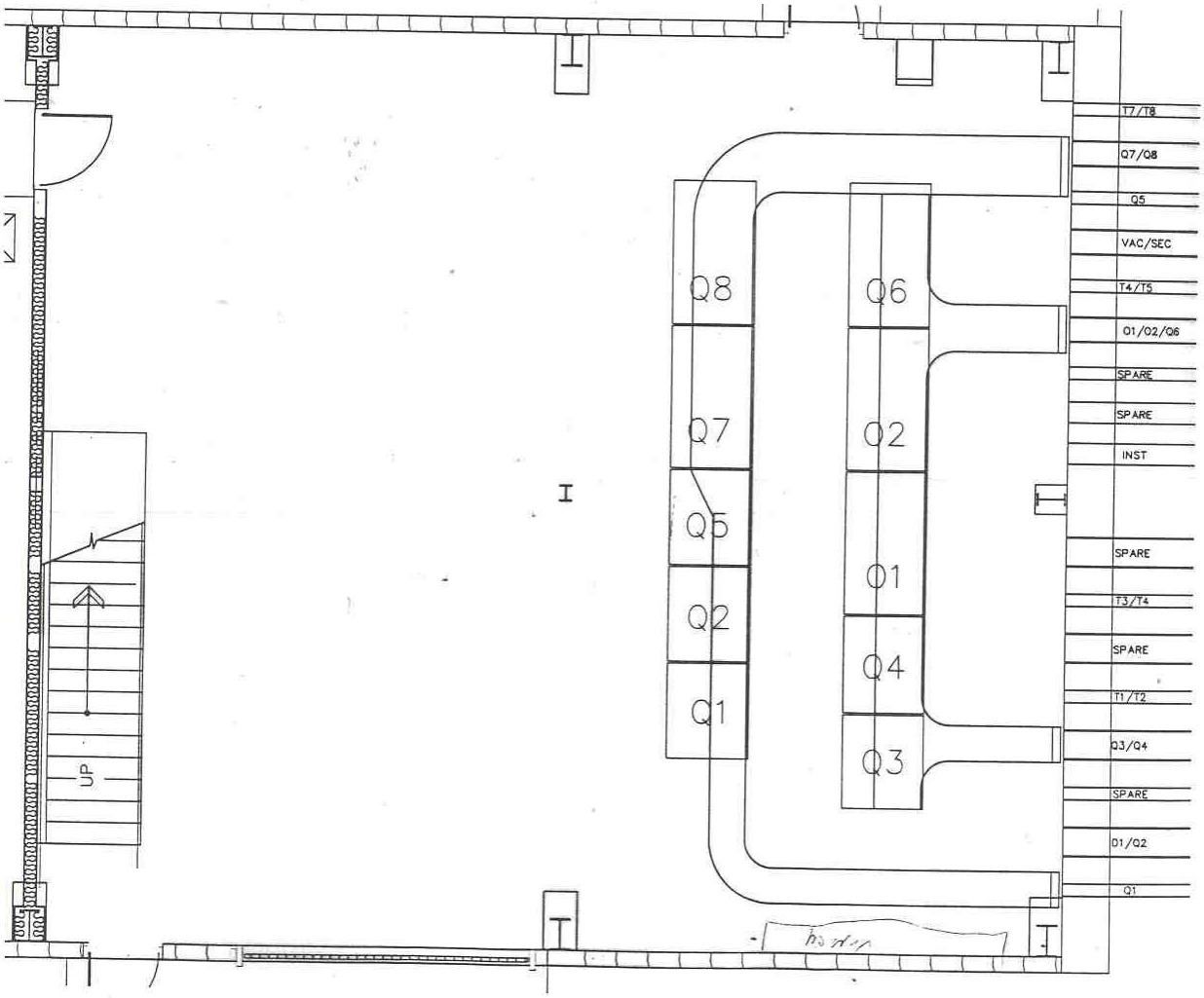
T7/T8
Q7/Q8
Q5
VAC/SEC
T4/T5
Q1/Q2/Q6
SPARE
SPARE
INST
SPARE
T3/T4
SPARE
T1/T2
Q3/Q4
SPARE
Q1/Q2
Q1
Q8
Q7
Q5
Q2
Q1
Q6
Q2
Q1
Q4
Q3
UP

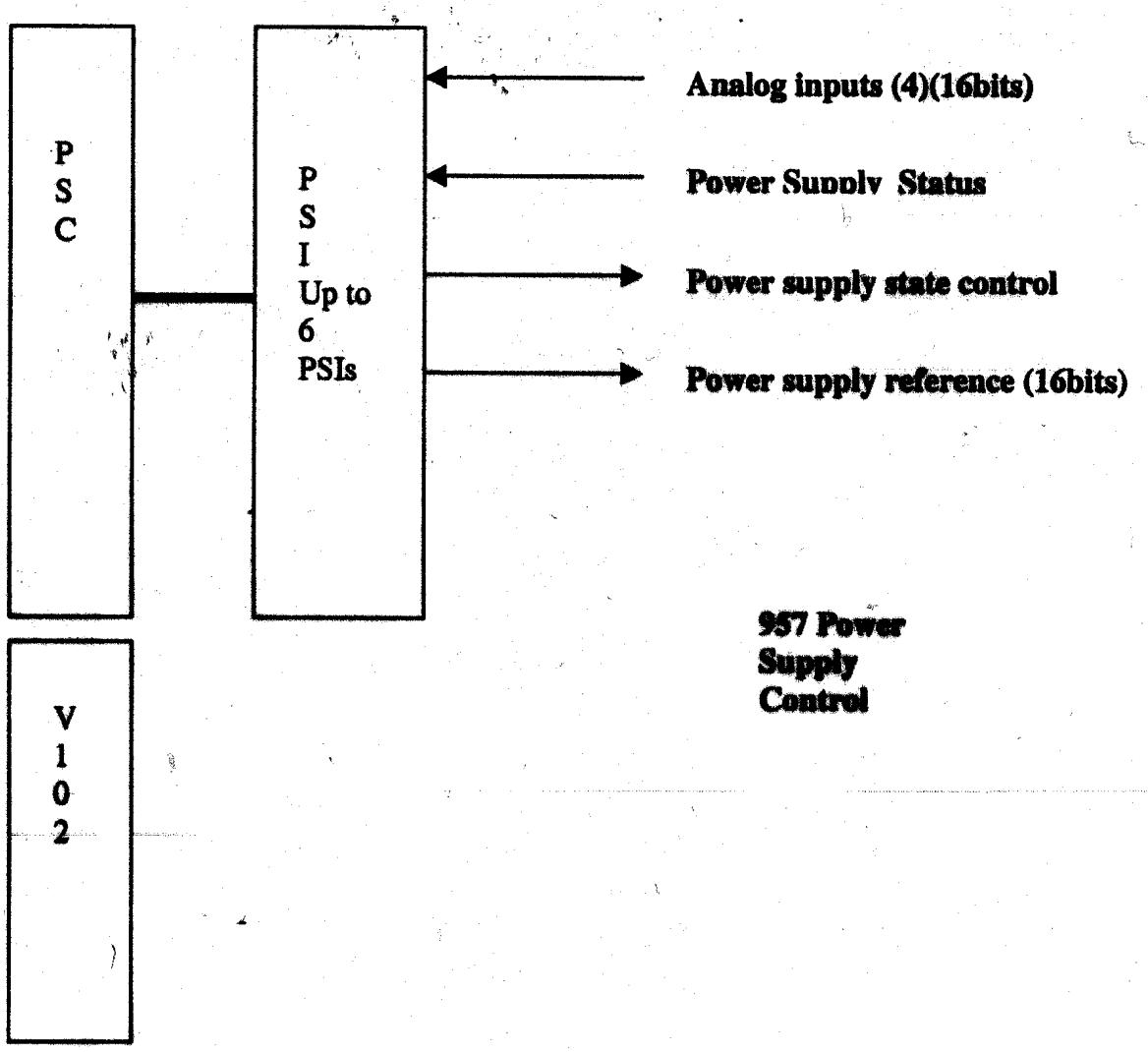

957 Power Supply Control

Horizontal Steerers 1-4
Vertical Steerers 1-4
Octupoles 1-2
Dipole
Quads 1-8

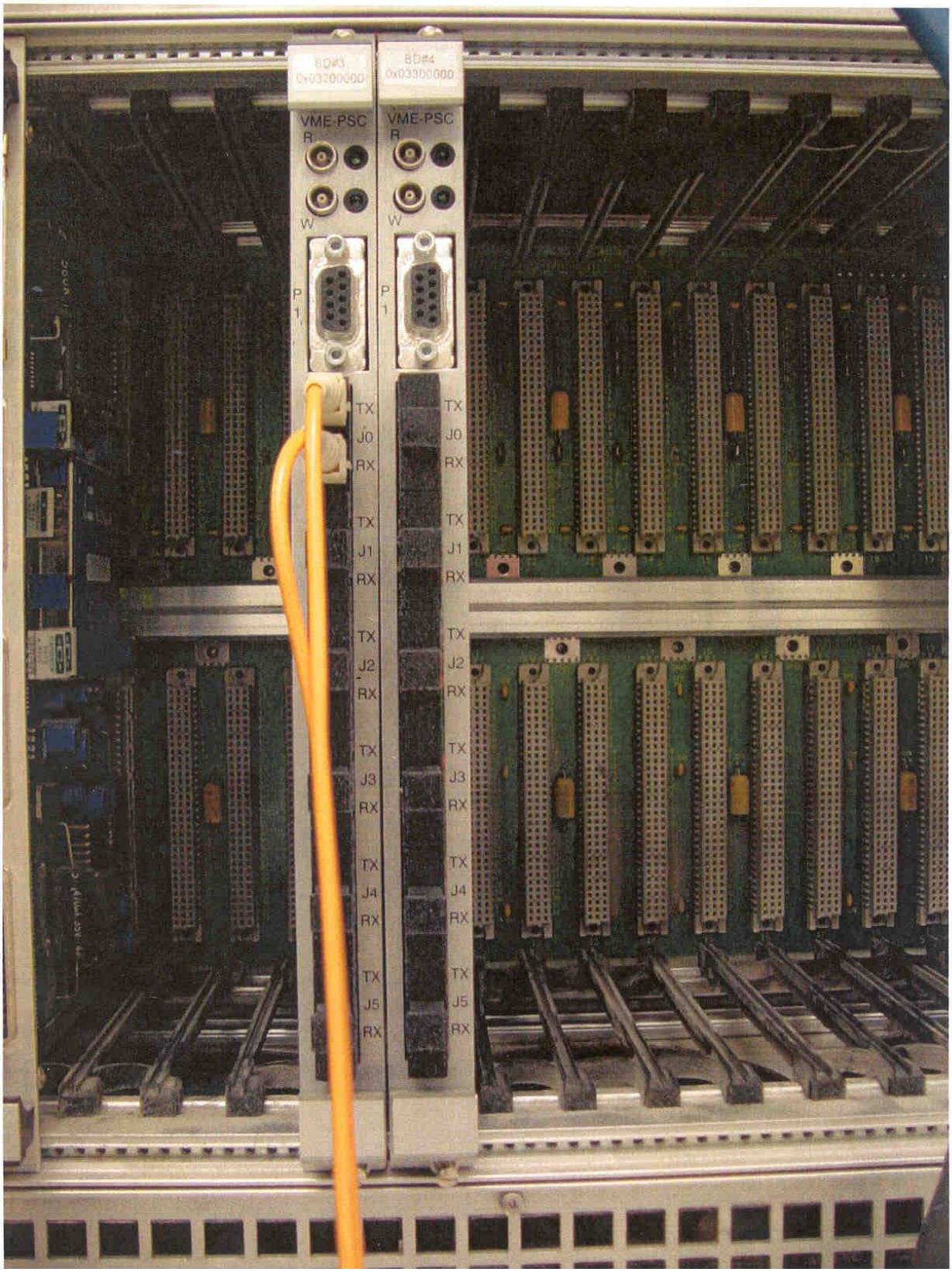
BD#3
0x03200000
BD#4
0x03300000
VME-PSC
R
W
P
1
TX
J0
RX
TX
J1
RX
TX
J2
RX
TX
J3
RX
TX
J4
RX
TX
J5
RX
VME-PSC
R
W
P
1
TX
J0
RX
TX
J1
RX
TX
J2
RX
TX
J3
RX
TX
J4
RX
TX
J5
RX

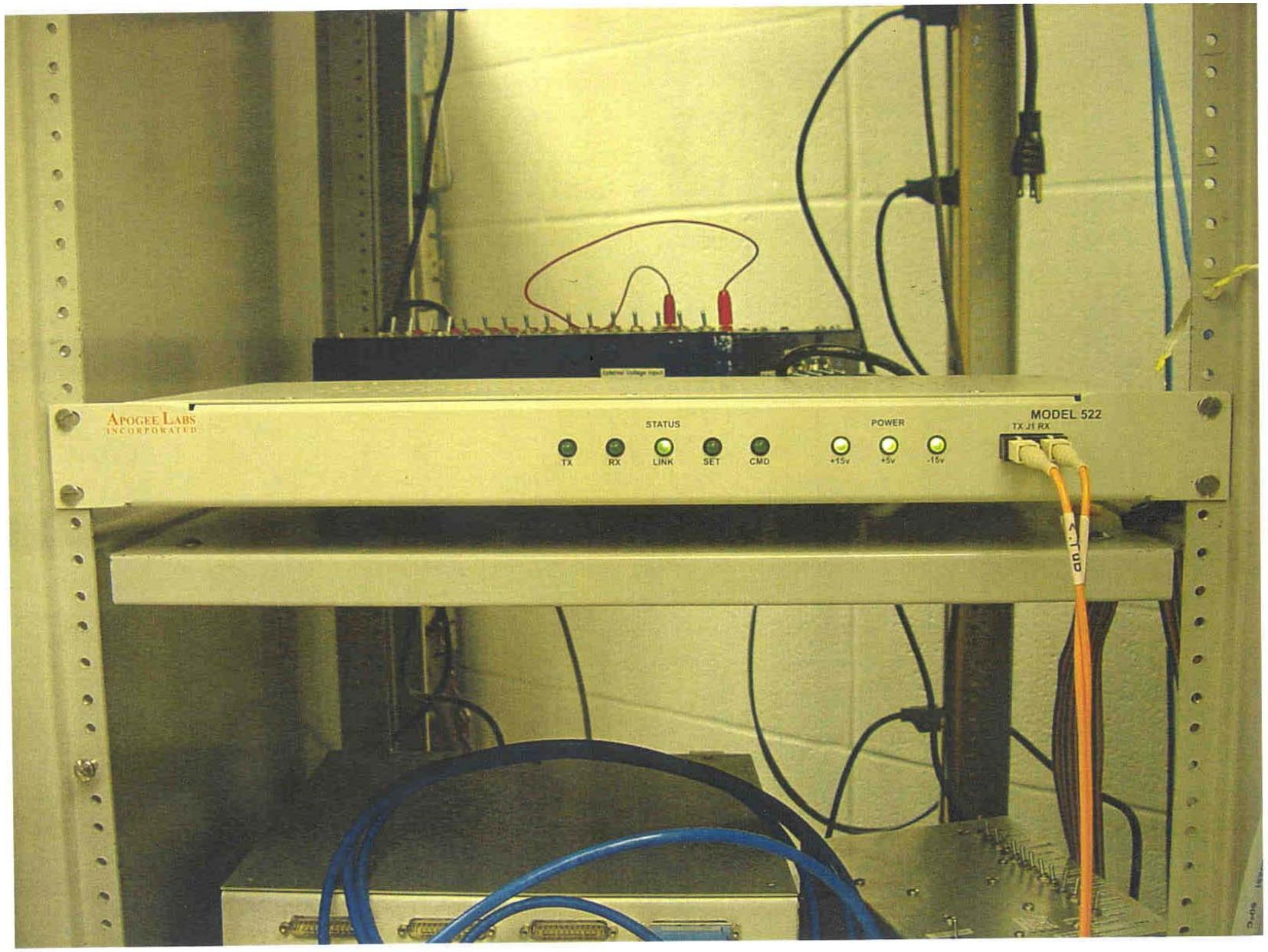
APOGEE LABS
INCORPORATED
STATUS
TX
RX
LINK
SET
CMD
POWER
+15v
+5v
-15v
MODEL 522
TX J1 RX

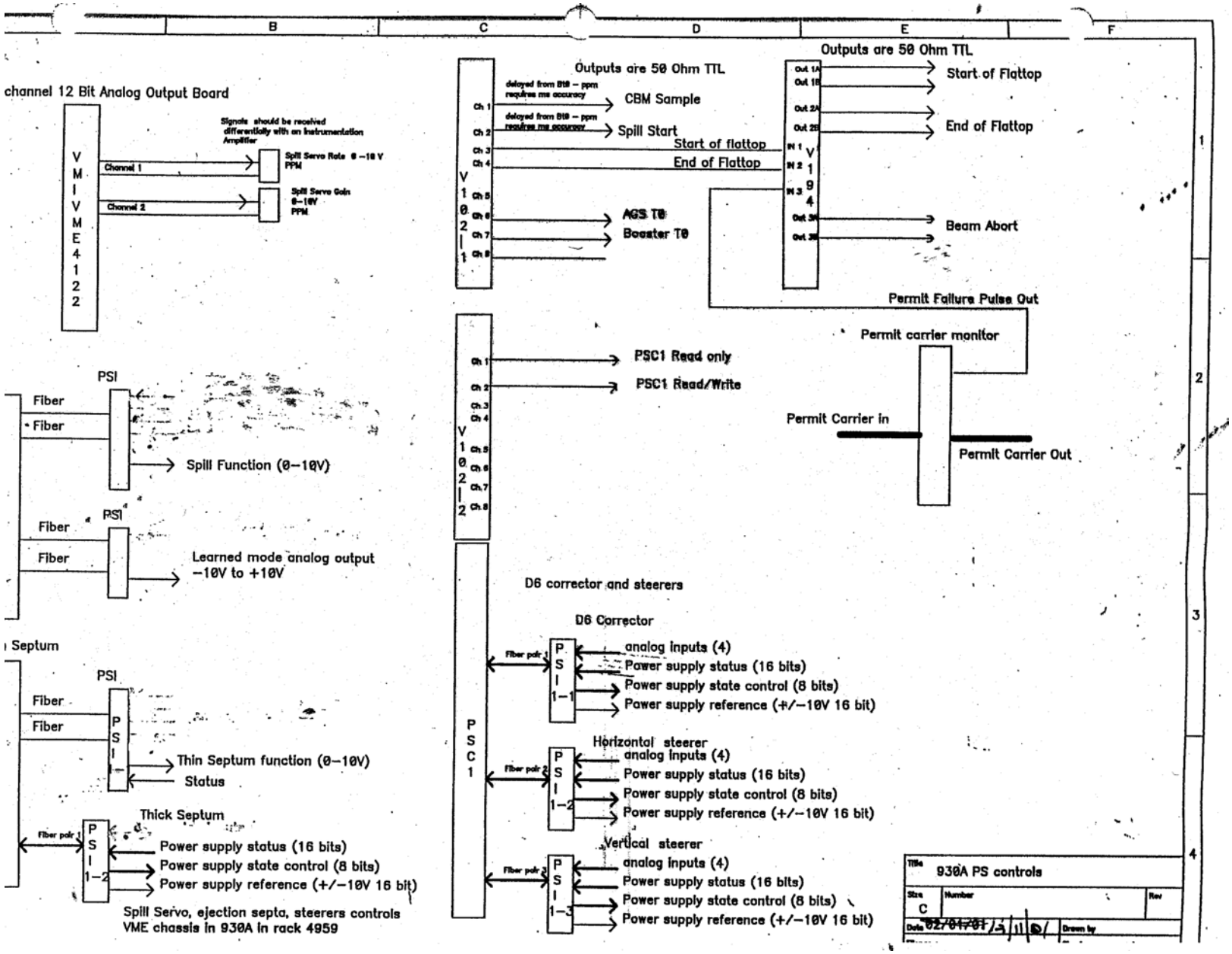
B
C
D
E
F
channel 12 Bit Analog Output Board
VMIVME4122
Signals should be received differentially with an Instrumentation Amplifier
Channel 1
Channel 2
Spill Servo Rate 0 –10 V PPM
Spill Servo Gain 0–10V PPM
PSI
Fiber
Fiber
Spill Function (0–10V)
PSI
Fiber
Fiber
Learned mode analog output –10V to +10V
Septum
PSI
Fiber
Fiber
PSI 1–
Thin Septum function (0–10V)
Status
Thick Septum
Fiber pair 1
PSI 1–2
Power supply status (16 bits)
Power supply state control (8 bits)
Power supply reference (+/–10V 16 bit)
Spill Servo, ejection septa, steerers controls
VME chassis in 930A in rack 4959
V1021-1
Outputs are 50 Ohm TTL
delayed from B19 – ppm requires ns accuracy
Ch 1
CBM Sample
delayed from B19 – ppm requires ns accuracy
Ch 2
Spill Start
Ch 3
Start of flattop
Ch 4
End of Flattop
Ch 5
Ch 6
AGS T0
Ch 7
Booster T0
Ch 8
V194
Outputs are 50 Ohm TTL
Out 1A
Out 1B
Start of Flattop
Out 2A
Out 2B
End of Flattop
IN 1
IN 2
IN 3
Out 3A
Out 3B
Beam Abort
Permit Failure Pulse Out
Permit carrier monitor
Permit Carrier in
Permit Carrier Out
V1022-2
Ch 1
PSC1 Read only
Ch 2
PSC1 Read/Write
Ch 3
Ch 4
Ch 5
Ch 6
Ch 7
Ch 8
PSC1
D6 corrector and steerers
D6 Corrector
Fiber pair 1
PSI 1–1
analog inputs (4)
Power supply status (16 bits)
Power supply state control (8 bits)
Power supply reference (+/–10V 16 bit)
Horizontal steerer
Fiber pair 2
PSI 1–2
analog inputs (4)
Power supply status (16 bits)
Power supply state control (8 bits)
Power supply reference (+/–10V 16 bit)
Vertical steerer
Fiber pair 3
PSI 1–3
analog inputs (4)
Power supply status (16 bits)
Power supply state control (8 bits)
Power supply reference (+/–10V 16 bit)
1
2
3
4
Title
930A PS controls
Size
C
Number
Rev
Date
Drawn by

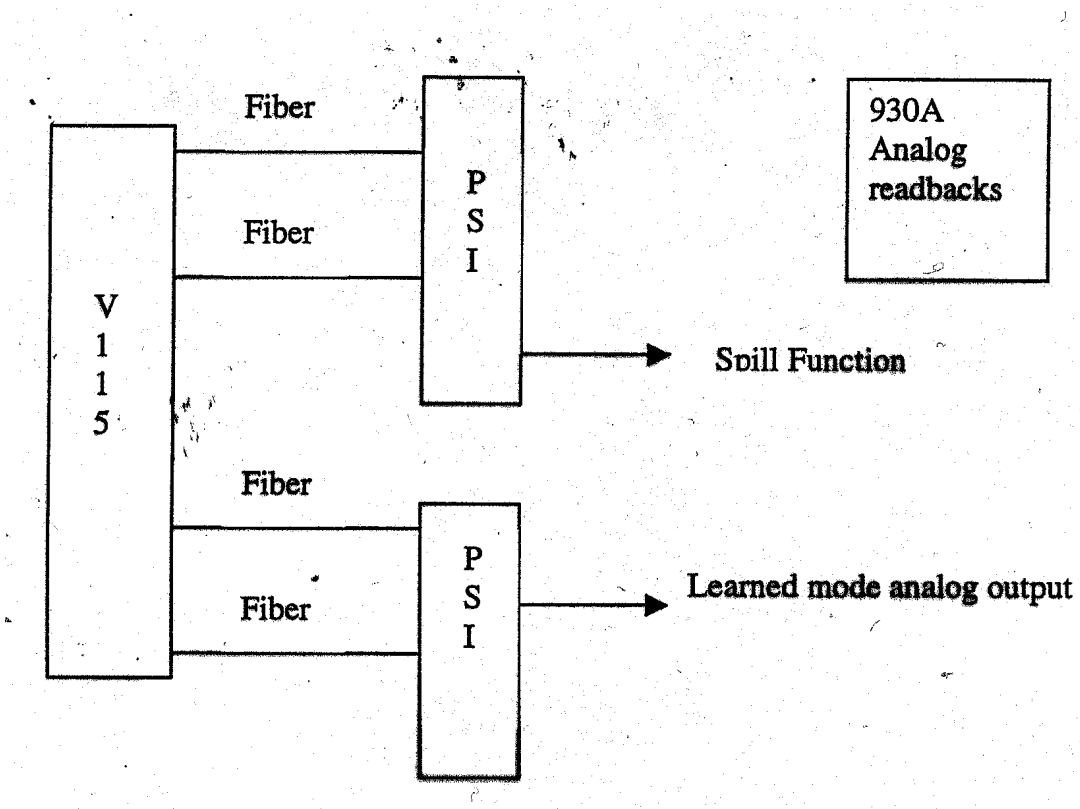
V
1
1
5
Fiber
Fiber
P
S
I
930A
Analog
readbacks
Spill Function
Fiber
Fiber
P
S
I
Learned mode analog output

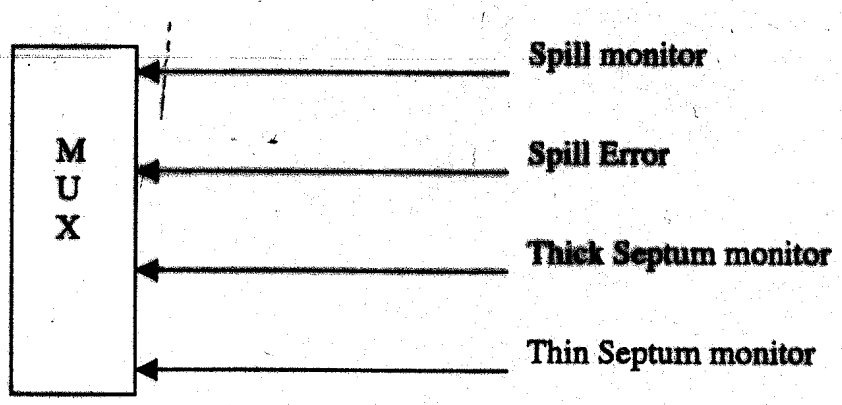
M
U
X
Spill monitor
Spill Error
Thick Septum monitor
Thin Septum monitor

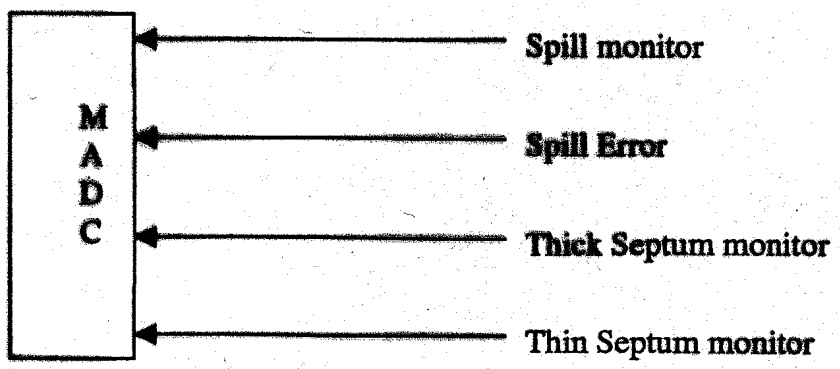
M
A
D
C
Spill monitor
Spill Error
Thick Septum monitor
Thin Septum monitor

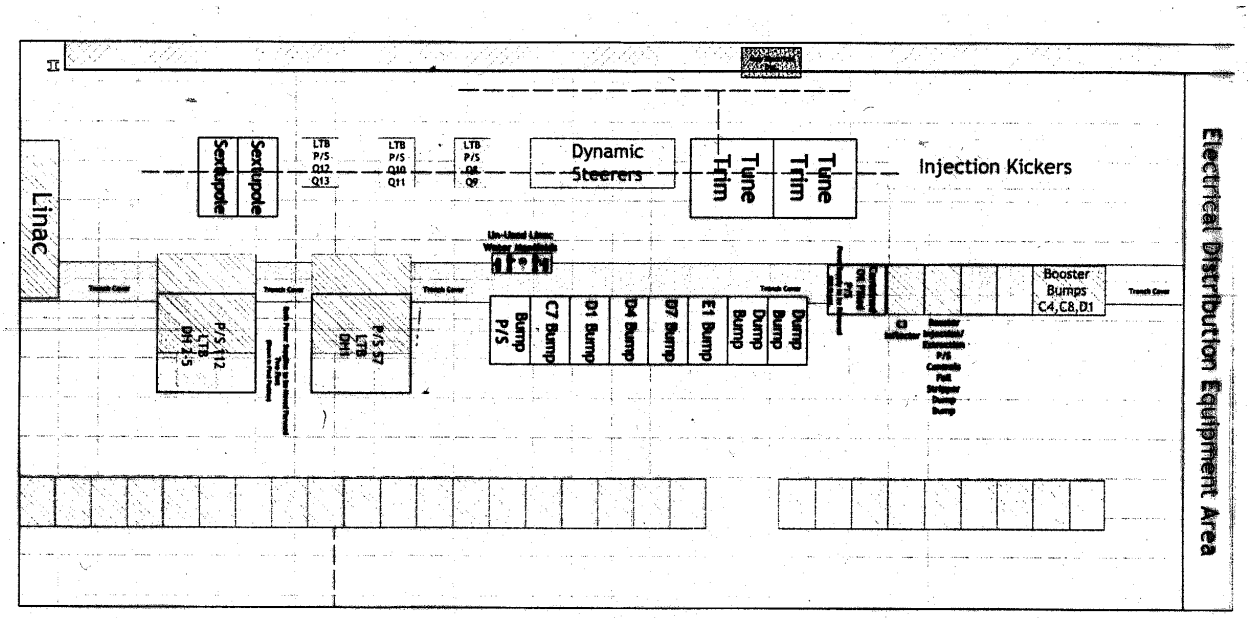

BAF Equipment Locations in Building 930 UEB

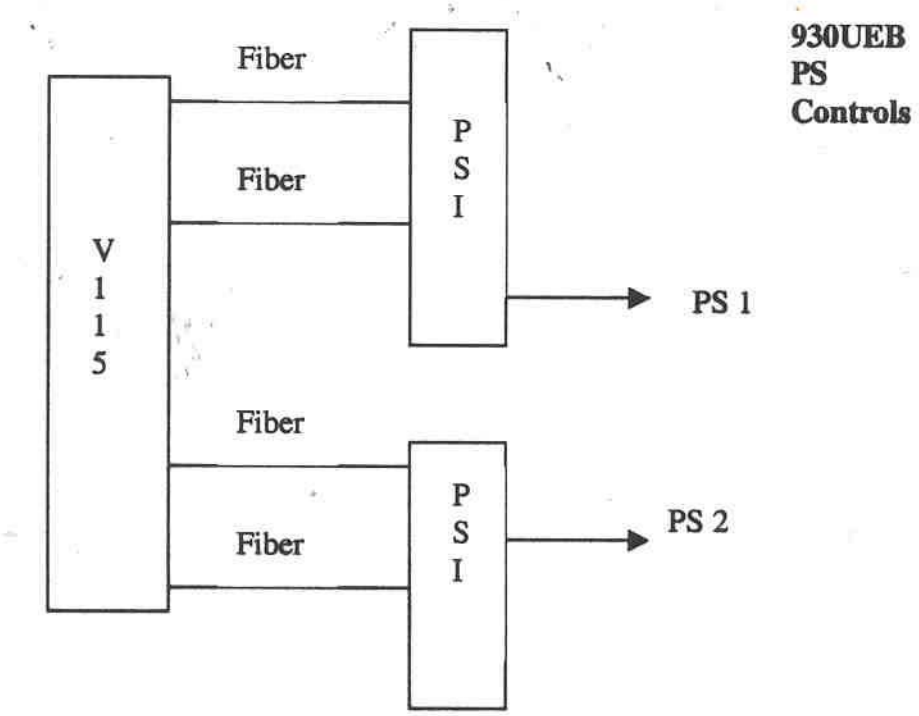

Bumps 1-6
Dump Bump
Resonant Sextupole 1-2
Tune trim 1-2

930UEB
Analog
readbacks

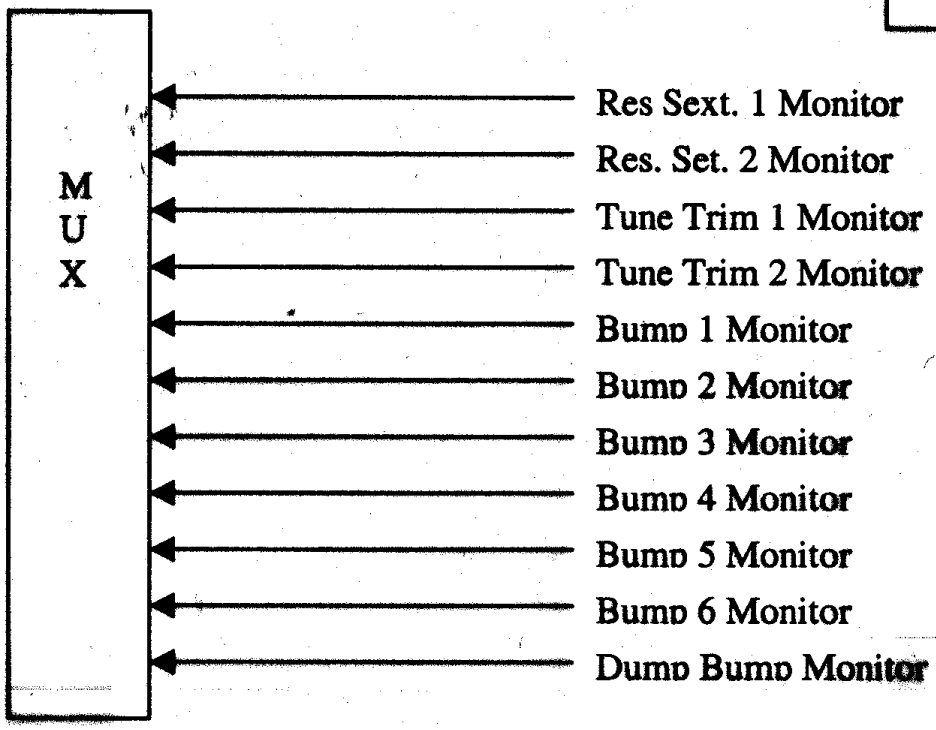

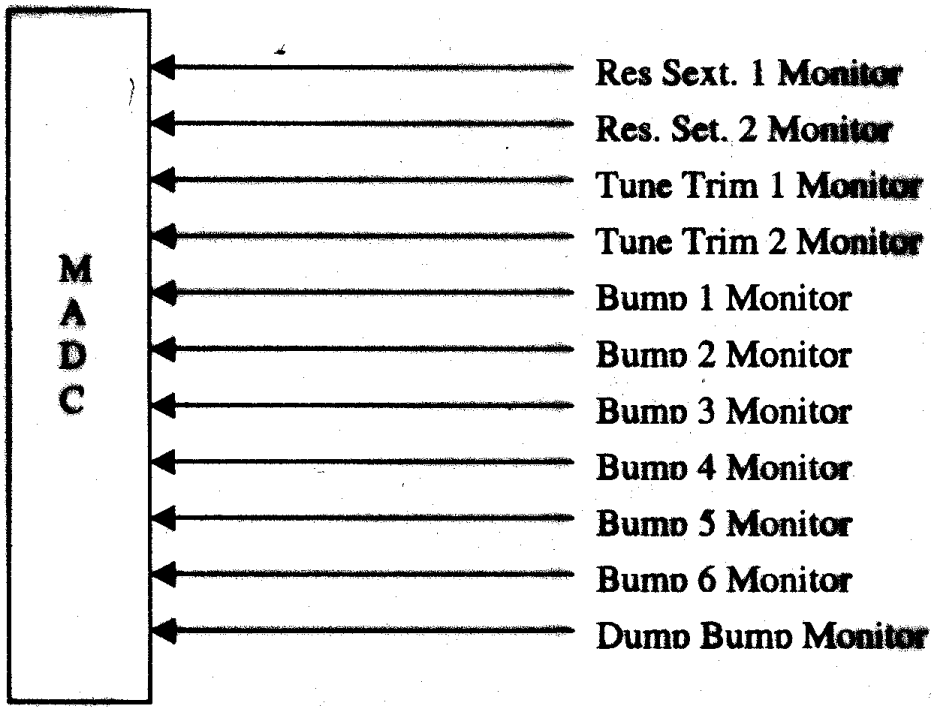

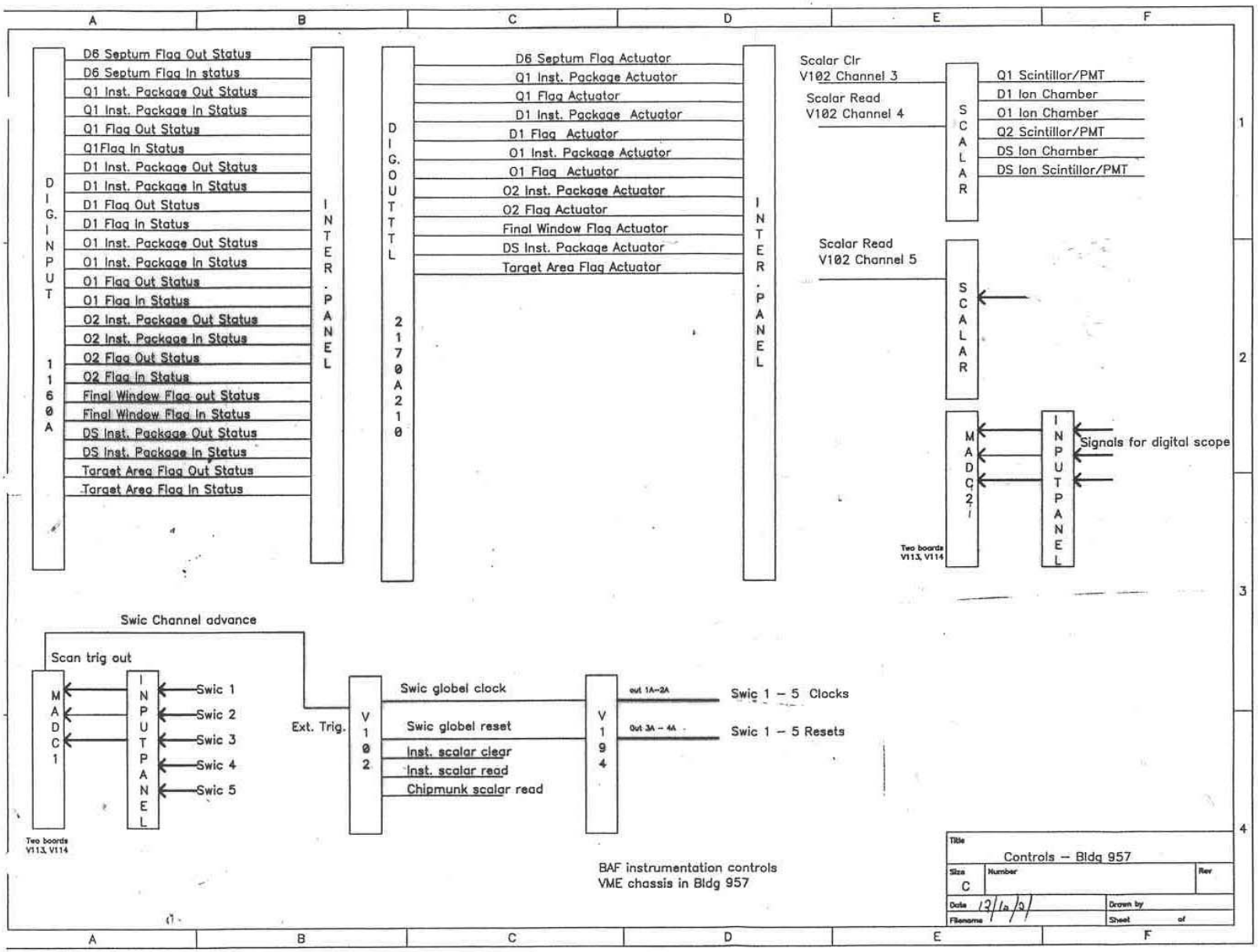
DIG. INPUT 1160A
D6 Septum Flag Out Status
D6 Septum Flag In status
Q1 Inst. Package Out Status
Q1 Inst. Package In Status
Q1 Flag Out Status
Q1Flag In Status
D1 Inst. Package Out Status
D1 Inst. Package In Status
D1 Flag Out Status
D1 Flag In Status
O1 Inst. Package Out Status
O1 Inst. Package In Status
O1 Flag Out Status
O1 Flag In Status
O2 Inst. Package Out Status
O2 Inst. Package In Status
O2 Flag Out Status
O2 Flag In Status
Final Window Flag out Status
Final Window Flag In Status
DS Inst. Package Out Status
DS Inst. Package In Status
Target Area Flag Out Status
Target Area Flag In Status
INTER. PANEL
DIG. OUTTTL 2170A210
D6 Septum Flag Actuator
Q1 Inst. Package Actuator
Q1 Flag Actuator
D1 Inst. Package Actuator
D1 Flag Actuator
O1 Inst. Package Actuator
O1 Flag Actuator
O2 Inst. Package Actuator
O2 Flag Actuator
Final Window Flag Actuator
DS Inst. Package Actuator
Target Area Flag Actuator
INTER. PANEL
Scalar Clr
V102 Channel 3
Scalar Read
V102 Channel 4
SCALAR
Q1 Scintillor/PMT
D1 Ion Chamber
O1 Ion Chamber
Q2 Scintillor/PMT
DS Ion Chamber
DS Ion Scintillor/PMT
Scalar Read
V102 Channel 5
SCALAR
MADC21
Two boards V113, V114
INPUTPANEL
Signals for digital scope
Swic Channel advance
Scan trig out
MADC1
Two boards V113, V114
INPUTPANEL
Swic 1
Swic 2
Swic 3
Swic 4
Swic 5
Ext. Trig.
V102
Swic globel clock
Swic globel reset
Inst. scalar clear
Inst. scalar read
Chipmunk scalar read
V194
out 1A–2A
Out 3A – 4A
Swic 1 – 5 Clocks
Swic 1 – 5 Resets
BAF instrumentation controls
VME chassis in Bldg 957
Title
Controls – Bldg 957
Size
C
Number
Rev
Date
Drawn by
Filename
Sheet
of

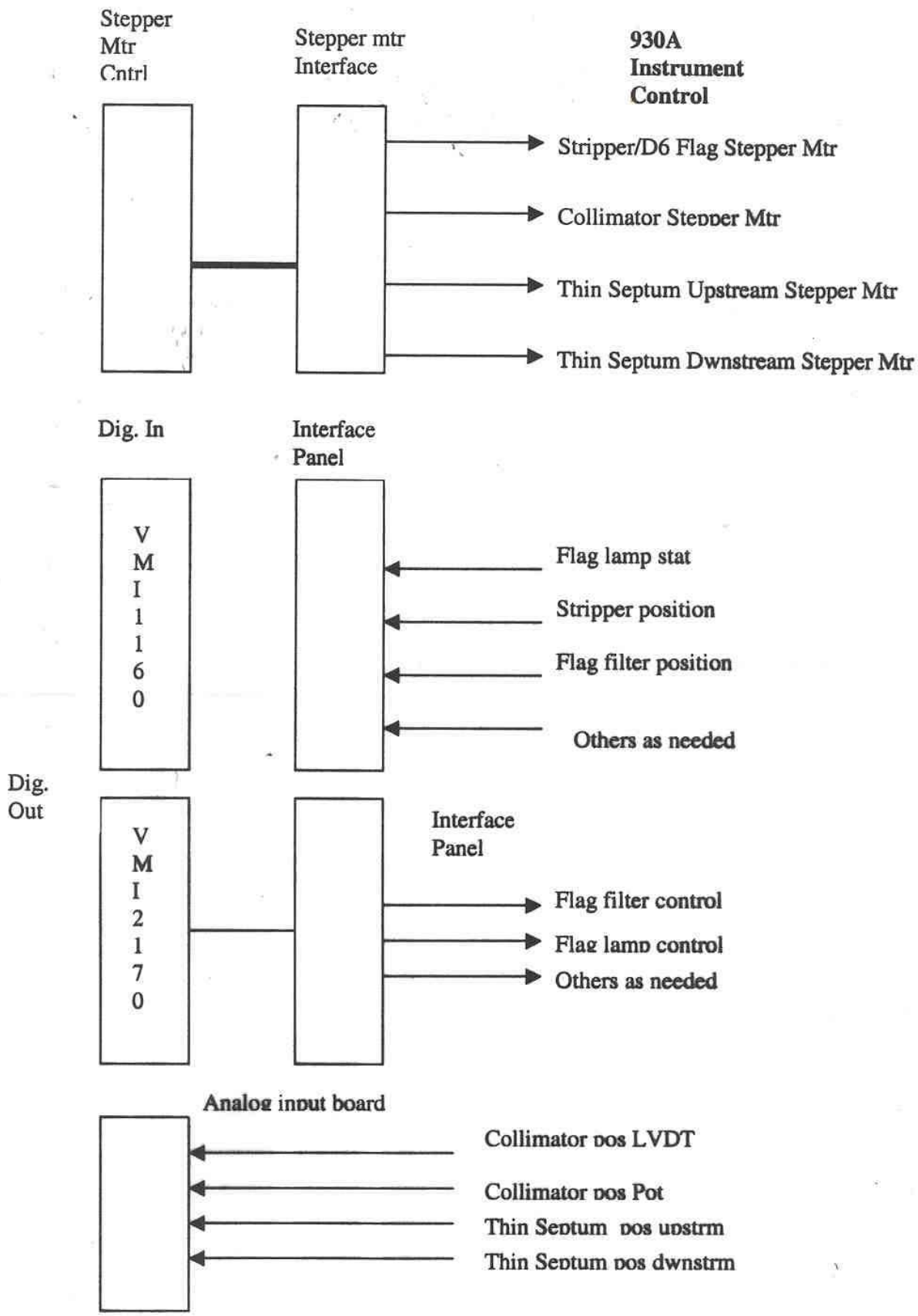
Stepper
Mtr
Cntrl
Stepper mtr
Interface
930A
Instrument
Control
Stripper/D6 Flag Stepper Mtr
Collimator Stepper Mtr
Thin Septum Upstream Stepper Mtr
Thin Septum Dwnstream Stepper Mtr
Dig. In
Interface
Panel
VMI1160
Flag lamp stat
Stripper position
Flag filter position
Others as needed
Dig.
Out
VMI2170
Interface
Panel
Flag filter control
Flag lamp control
Others as needed
Analog input board
Collimator pos LVDT
Collimator pos Pot
Thin Septum pos upstrm
Thin Septum pos dwnstrm

VIPC618 – with two IP – Octal Opto– 8 channel RS232 – interfaces

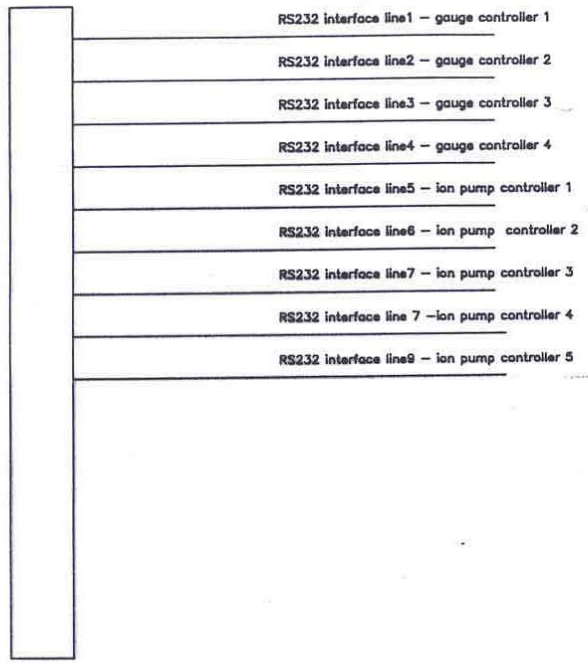

Vacuum controls
957

Mux assignments for new BAF/Booster Power supplies

In 930A there are 7 free BNC inputs on the Digital mux system

Function	Assignment	MADC Channel
Spill Function	J9	1
Learned mode output	J10	2
Thin Septum Monitor	J11	3
Thick Septum Monitor	J12	4
Collimator Position - LVDT	NA	5
Collimator Position - POT	NA	6
Thin Septum Positon up stream	NA	7
Thin Septum Position Dwn stream	NA	8

In 930UEB there are 17 free BNC inputs on the Cytec Analog mux

Function	Assignment	
Resonant Sextupole 1 function	Channel 2	1
Resonant Sextupole 2 function	Channel 3	2
Tune Trim 1 function	Channel 4	3
Tune Trim 2 function	Channel 5	4
Bump 1 function	Channel 6	5
Bump 2 function	Channel 7	6
Bump 3 function	Channel 8	7
Bump 4 function	Channel 9	8
Bump 5 function	Channel 10	9
Bump 6 function	Channel 11	10
Dump Bump function	Channel 12	11
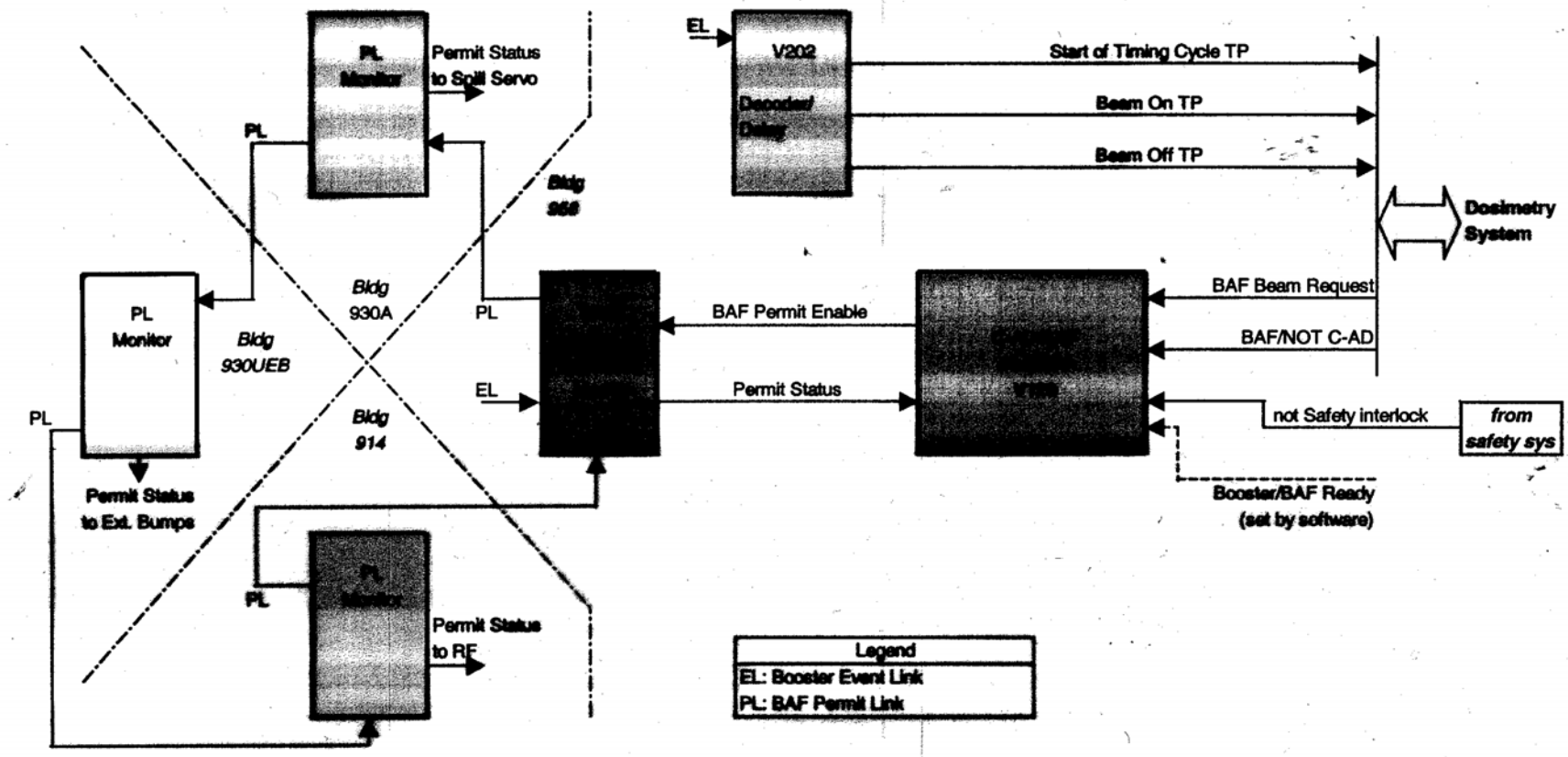
C-AD Controls
Permit, Timing, IO
for BAF Dosimetry