Accelerator Department
BROOKHAVEN NATIONAL LABORATORY
Associated Universities, Inc.
Upton, L.I. N.Y.

AGS DIVISION TECHNICAL NOTE

No. 68

C.A. Christianson
Sept. 30, 1969

TARGET TRANSPORT SYSTEM

I. Introduction

The purpose of this report is to describe the target transport system that has been used, in conjunction with the G-20 inside airlock, by the Chemistry Department for the past 6 months.

To change an internal target in the AGS required that the machine be shut down for 10 to 30 minutes depending upon the airlock location in the ring and the pumpdown leak check time. The first step to reduce machine downtime was to make the airlock remotely controlled from the Main Control Room. The second step was to install an automatic target transfer system, again controlled from the Main Control Room, and used in conjunction with remote controlled pan, tilt and zoom TV for monitoring this operation by the AGS Operations Staff.

An indexing magazine, containing 8 targets, of the same or different configurations, is used with the transfer system. The pre-loaded magazine is changed manually during scheduled ring maintenance periods eliminating non-scheduled machine downtime. These two improvements were initially incorporated in the G-10 outside airlock, the primary AGS internal target station. The machine downtime required during a target change was then reduced to two one minute intervals. This occurs when the ring sectionalizing valves close during the airlock retract and insert cycles. The G-10 airlock downtime, the time required for a complete target transfer, is approximately 15 minutes. The major portion of this time is required for airlock pumpdown and leak check.

At G-20 inside, using the remotely controlled airlock, target transfer and transport systems, a target can be delivered outside the AGS tunnel in less than 2 minutes after its exposure to the proton beam.

Transport System Parameters

The Chemistry Dept. uses internal targets at the AGS, but, in contrast to other users, the Chemistry Dept. is interested in the radioactive materials within the target itself and, because of the short half-life of some target materials, fast target retrieval is mandatory. To eliminate downtime between Chemistry runs, and to facilitate fast removal, a target transport system, to be used in conjunction with the G-20 inside airlock and transfer machine, was designed.

Discussions held with Drs. Friedlander and Hudis of Chemistry led to the four general design parameters listed below. The target transport system should be able to:

1) accept a target from the target transfer system and deliver it to a point outside of the AGS tunnel.

2) return a target to the transfer system.

3) be easily cleared away to allow the transfer system to be used with a target magazine.

4) be flexible in that the terminal outside the AGS tunnel can be relocated up to 30 ft above the ring floor and 100 ft from the airlock.

Transport System Operation

A single tube pneumatic system seemed to offer the most advantages and least problems of the various carrier systems investigated. The transport system is an extension of the transfer system, in effect taking the place of the magazine. Either one of the two modes of operation are possible, transport or transfer. It takes a technician 5 minutes to change from one mode of operation to the other, after machine access has been gained. Fig. 1 shows the general layout of the system.

A description of the operational sequence is as follows:

Assume that the airlock is open and ready for a target change.

Step #1. When the transfer machine begins its cycle, the transport ring terminal elevator descends to position the target carrier, Fig. 2 sometimes called a "rabbit", to accept the target that would otherwise be deposited in the magazine.

Step #2. The target is clamped in the carrier and the transfer machine stops. The shuttle valve within the lab terminal shifts to put a vacuum to the pneumatic tube.

Step #3. The elevator is raised, placing the carrier into the pneumatic tube.

Step #4. Carrier is released from the elevator and travels to the lab terminal.

Step #5. When the carrier is in the lab terminal, a mechanism raises behind the carrier to align and clamp the carrier, at the same time, the shuttle valve moves halfway to put the terminal, and tube, to atmospheric pressure.

Step #6. The operator opens the terminal access door, unlocks the target from the carrier and removes the target.

Step #7. The operator locks a new target into the carrier, closes the access door and presses a"return" button.

Step #8. The carrier alignment mechanism drops out of the way.

Step #9. The shuttle valve shifts to pressurize the terminal box and tube.

Step #10. The carrier travels to the ring terminal. While traveling through the horizontal tube the carrier actuates a switch which returns the shuttle valve to "neutral".

Step 11. The carrier coasts to the carrier stop.

Step #12. The stop retracts to allow the carrier to fall gently to the elevator.

Step #13. The carrier is clamped to the elevator and at the same time it is properly aligned.

Step #14. The elevator descends to contact the magazine platform.

At this point, the MCR is signalled to start the transfer machine in order to place the new target onto the target flip motor. When the transfer machine has finished its cycle, the ring terminal elevator rises, allowing the airlock to be closed.

Programmer

The operation sequence, information feedback and interlock between systems, are controlled by cams in a 24-step Tenor Model #2400 programmer. All motions are driven by air cylinders and at the completion of each motion, an electric signal is sent to index the programmer one step. Only the satisfactory completion of the previously initiated movement can cause the programmer to step. This is a safety feature that keeps the movements and programmer in proper relationship, and is accomplished by a single pole - 24 position switch module on the programmer. The main control room can, in the event of a malfunction, step the programmer remotely.

Alignment

At the ring terminal the carrier must be aligned closely in relation to the transfer machine and also be lowered from the pneumatic tube for target transferring. When the carrier drops to the elevator, it lands on the bottom fingers of the carrier clamp and then the carrier clamp lowers it at a controlled speed. Fig. 3. The alignment cam of the carrier contacts the alignment roller of the elevator and as the carrier is forced downward, it rotates, up to 180°, until the cam slot falls over the roller. Thus, the roller acts as a key and the cam slot acts as its keyway. Theoretically, the alignment should work as described above except in the case that the cam zenith is in line with the vertical ℄ of the roller. Because of friction and radial freedom between the carrier and pneumatic tube, the carrier will not align itself even if the cam zenith is up to 30° from the roller ℄. Even if this were only 1° or 2° it could not be tolerated.

Logic Current

A pneumatic logic circuit, Fig. #5, was designed and is included in the carrier clamp cylinder air lines. The circuit would have been better if a four-way valve were used in place of the two three-way valves V10 and V11 but, only three-way valves were available with the programmer used. When V10 is first actuated, V14 is opened also, but after the carrier is clamped, the programmer is stepped and V14 is returned to normal. Air from V10 goes to the clamp side of cylinder C8 and through the needle valve V23 to an accumulator. When enough pressure is built up downstream of V23, V17 is actuated. If V14 is open, pressure actuates V16 reversing the air flow to the clamp cylinder C8. In reversing C8 operates rapidly and, because one lower leg of the carrier clamp has a rubber

button to hit the carrier, the carrier is turned as it is flipped up. When cylinder C8 is in the full release position, the accumulator exhausts through the check valve side of V23 and then through V16, releasing V17 to normal, which in turn releases V16 to normal, and the carrier clamp cylinder again attempts to clamp and align the carrier. The logic circuit will continue to clamp and unclamp C8 until the carrier is fully aligned and seated, for only when the carrier is seated will the programmer be stepped. V23 has been adjusted to give C8 approximately 30 sec to clamp the carrier. It takes about 5 sec for the carrier to clamp, this allows 25 seconds for the programmer to step and put V14 to normal. This 25 sec delay in recycling C8 is a safety feature. Though the 25 sec delay is time lost to the G-20 operation, it merely postpones the start of an experiment but does not change the timing or schedule within the experiment itself.

Target Configuration

The target blades used by the Chemistry Dept. in conjunction with the transport system, are the standard "C" frame holder and clamp plate. The target itself is a metal foil, that can vary in thickness, mounted as shown in Fig. 4. This multi-traversal target is flipped by a standard target motor so that the foil is exposed to the proton beam and the holder does not pass through the circulating beam.

Conclusion

The target transport system was first set up in the target lab for debugging and operational checks. Then the system was installed at G-20 and a short period of time was used to make adjustments and final operational checks. The system was then made available to the Chemistry Dept. for their use.

I would like to acknowledge two types of help from the Target Group, F. Schneider, B. Vogt, and T. Fairchild. First was the positive help in setting up, finding, and correcting difficulties and suggesting changes for better operation of the system. Secondly, the Target Group accepted with equanimity the crowding of their lab during the first setup of the transport system.

Distribution: AGS Staff, M.E. Division, Adm. Group

Figure Captions

1. Elevation Layout of the Target Transport System as installed at G-20.
2. Target Carrier shown holding a typical target.
3. The Target Carrier is depicted within the pneumatic tube and clamped to the elevator base.
4. A Foil Target mounted in a "C" Frame as used by the Chemistry Dept. in conjunction with the Transport System.
5. Schematic drawing of the Pneumatic Logic System used to control the carrier and clamp cylinder.

TARGET TRANSPORT SYSTEM LAYOUT

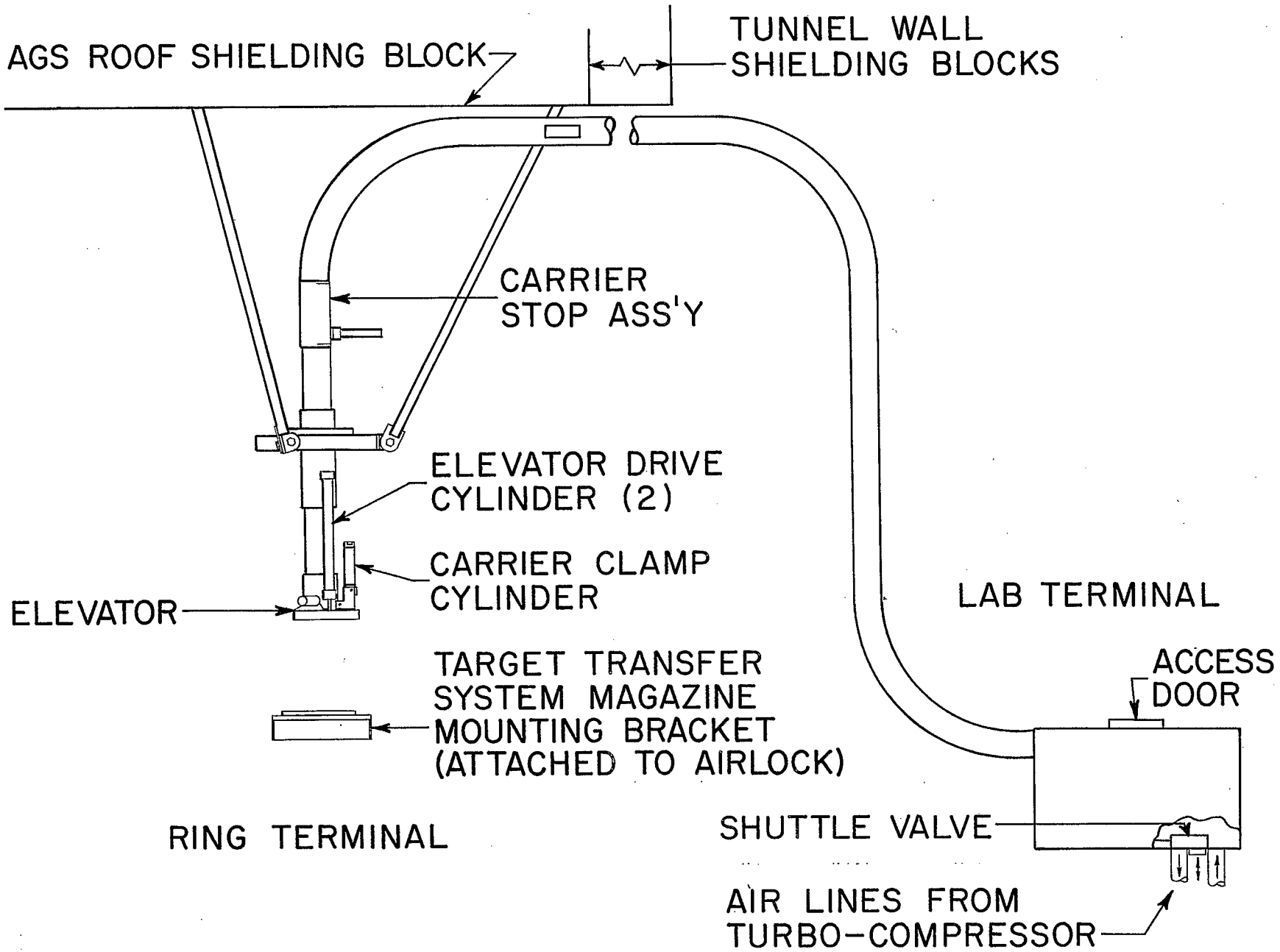

FIG. 1

TARGET CARRIER

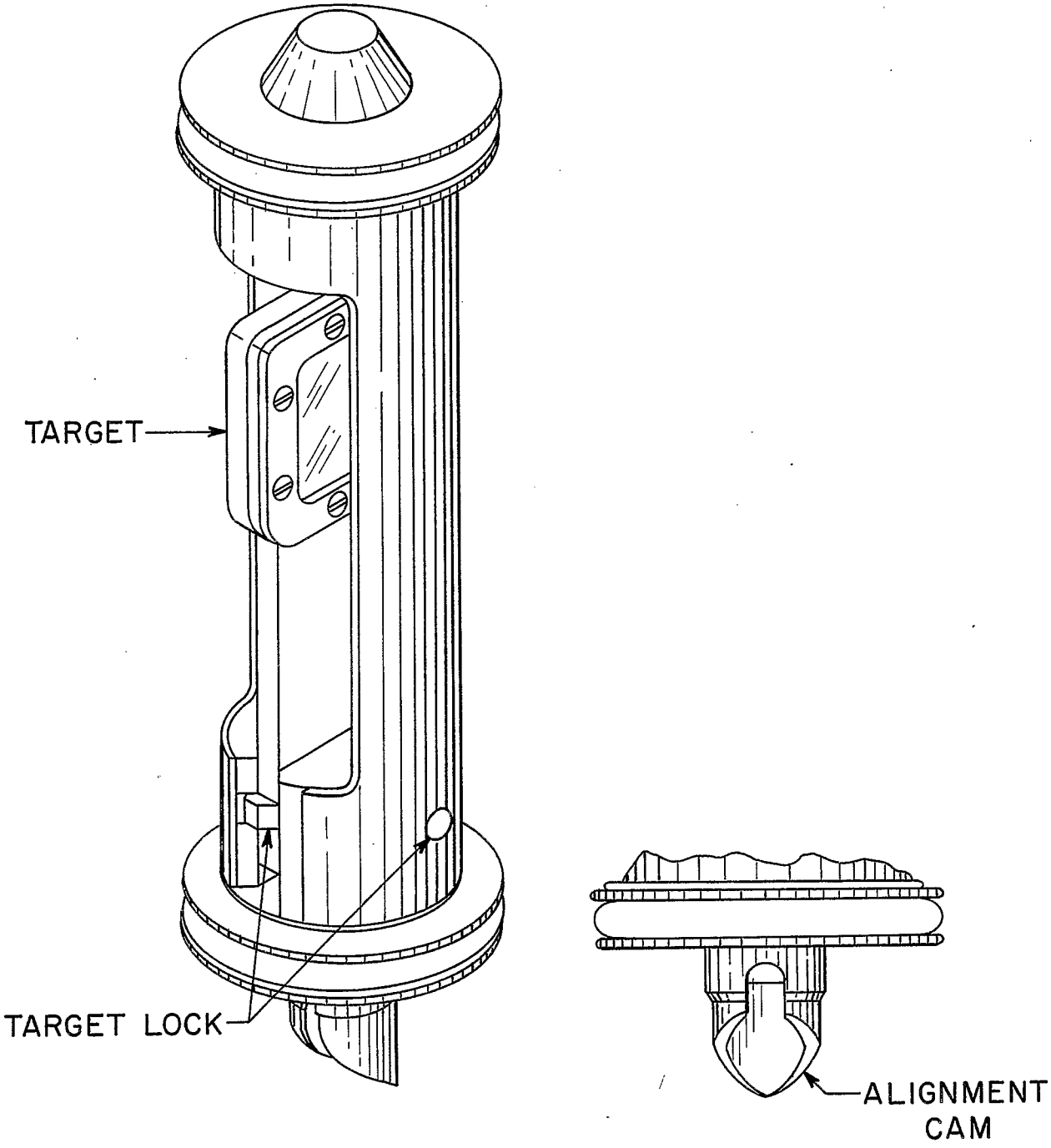

FIG. 2

CARRIER CLAMP

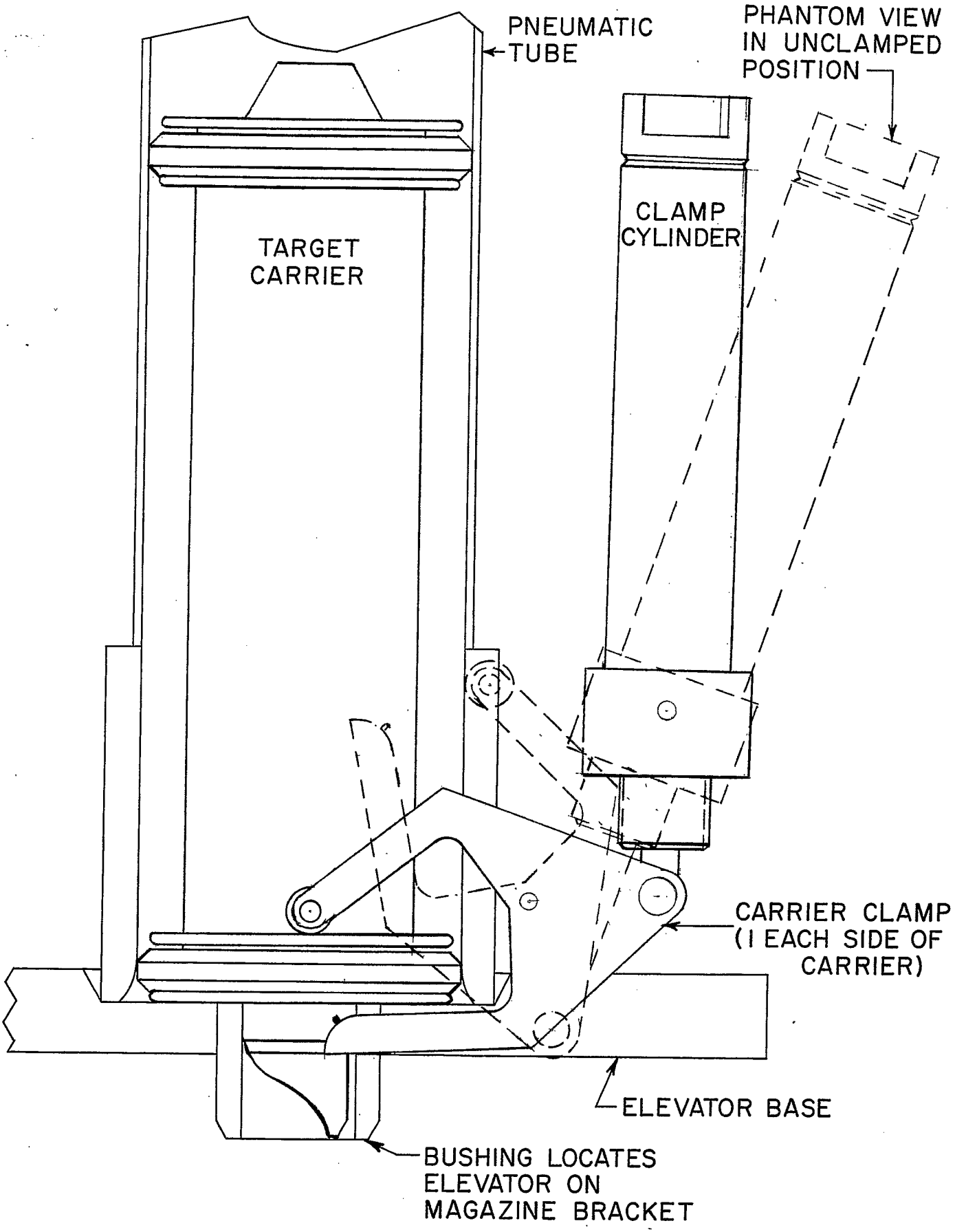

FIG. 3

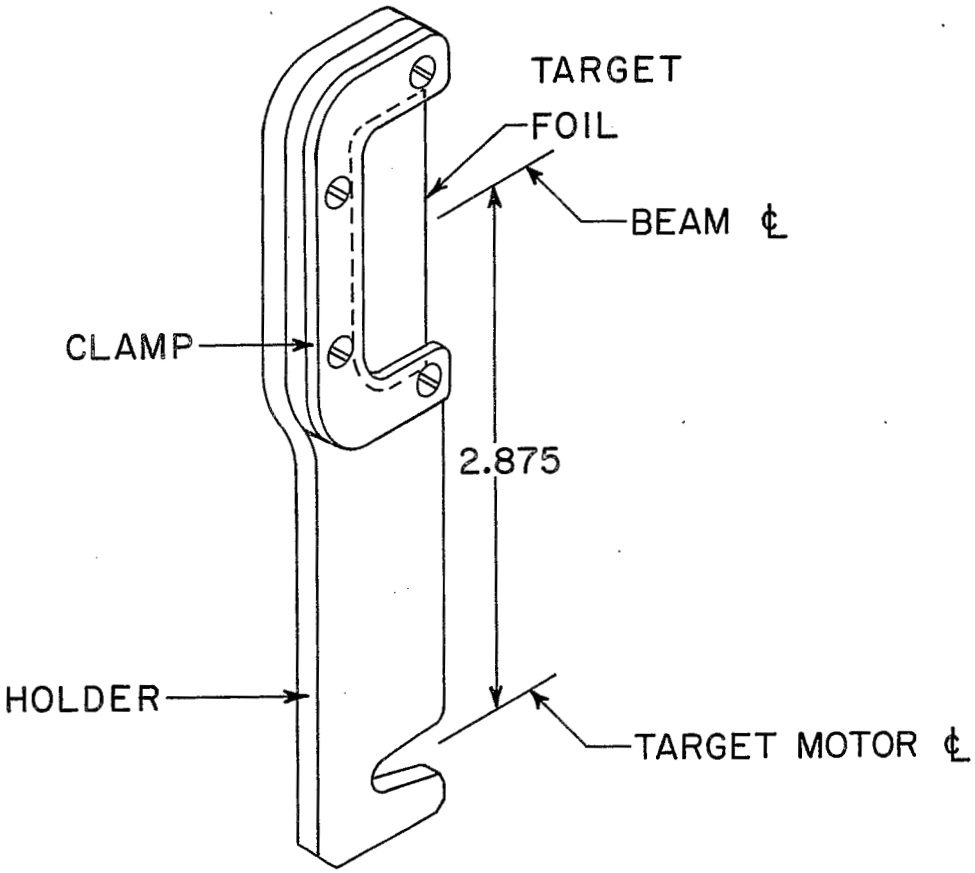

FIG. 4

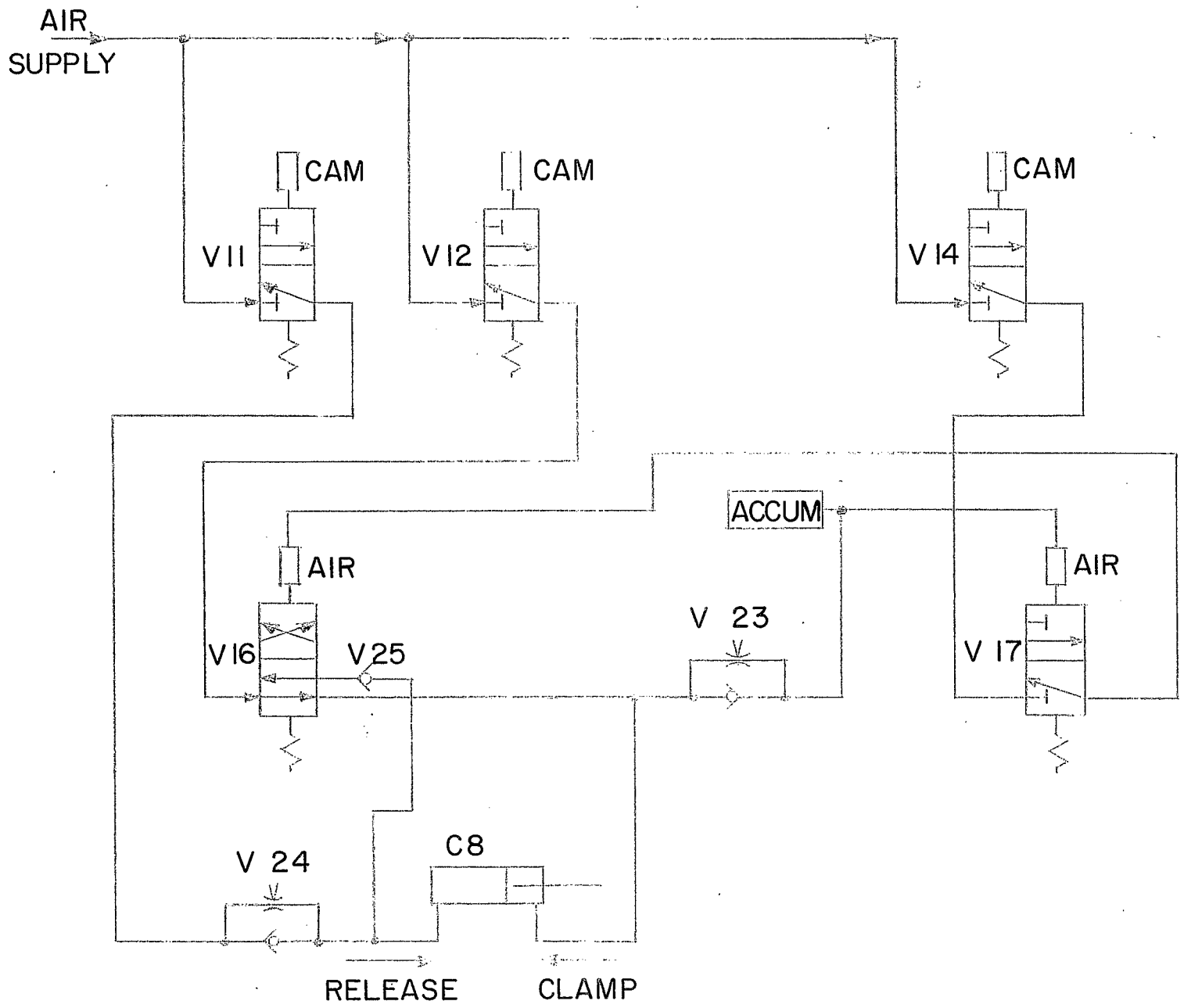

FIG. 5 CARRIER CLAMP CYLINDER