AGS Complex Machine Studies (AGS Studies Report No. 352) Quadrupole Steering Effect in the BTA Line
Study Period: June 25, 1996
Participants: P. Sampson and S.Y. Zhang
Reported by: S.Y. Zhang
Machine: BTA
Beam: Proton
Tools: BTA Multiwires and Loss Monitors
Aim: To evaluate some quadrupole steering effects in the BTA line.

Quardrupole Steering Effect in the BTA Line

1 SUMMARY

1. The quardrupole steering effect in the BTA line is found important. Given the sensitivity of the downstream optics and tight aperture in the BTA line, the optics optimization is almost impossible without eliminating the quardrupole steering effect.

2. The beam loss mechanism relevant to horizontal motion, usually observed at MW060, is explained by the horizontal motion induced vertical scraping at the vacuum chamber at DH4.

2 EXPERIMENT

Four different optics settings were used to study the quardrupole steering effect and the beam loss pattern in the BTA line. The current readbacks of the quadrupoles are shown in Table 1. The approximate locations of these quardrupoles in the BTA line are also shown, and Δ denotes the full range of the current change.

	At	I	II	III	IV	Δ	Unit
QV1	5.7 m	347	350	349	354	7	A
QH2	7.6 m	451	450	451	449	2	A
QV3	9.6 m	467	467	469	463	6	A
QH4	11.5 m	574	570	570	570	4	A
QV5	15.4 m	503	503	503	503	0	A
QH6	19.8 m	526	525	525	525	1	A
QV7	21.7 m	262	261	261	263	2	A
QH8	30.7 m	270	272	271	271	2	A
QV9	34.2 m	439	438	444	437	7	A
QH10	37.2 m	135	144	134	147	13	A
QV11	43.8 m	209	211	215	206	9	A
QH12	48.4 m	297	291	298	302	11	A
QV13	53.8 m	474	479	475	464	15	A
QH14	56.0 m	264	300	262	260	40	A
QV15	59.9 m	3.7	1.6	1.0	1.8	2.7	A

Table 1

It can be observed that the current changes from QV1 to QV9 are small. Since MW166, which is located downstream of the line, was not functioning at the time of this study, therefore the relatively larger changes of the QH10 to QV15 are not relevant to this study. These small changes to the upstream optics, however, clearly indicate quardrupole steering, which affects the beam loss pattern.

The experiment was not aimed at measuring quardrupole steering. Only after receiving data, we realize that the quadrupole steering effect is not negligible. Even with such small changes to the optics, our original goal, which was to correlate the beam loss with the optics, was impossible to reach.

3 Results

3.1 Vertical Steering

The vertical beam positions at MW006, MW060, and MW125 are shown in Table 2. The locations of the multiwires and the local beta functions are also shown. These positions are also plotted in Fig.1A, and the beam positions normalized using square root of local beta functions are shown in Fig.1B. This sort of normalization is the only thing we can do without knowing the steering source. It is observed that the positions at MW006 are constant, ruling out most possibilities that the beam positions at MW060 and MW125 are affected by the incoming beam variations. Therefore, the beam position variations at MW060 and MW125 are believed to be caused by quardrupole steering. After examining the beam trajectories owing to quadrupole steerings from Q1 to Q5, of 1 *mrad* each, shown in Fig.2A, one cannot single out any quadrupole to be a sole steering source responsible to the beam positions at MW060 and MW125. On the other hand, disregarding the relatively small position drift at MW060, one may single out Q9 as the steering source responsible to the beam position variation at MW125. In Fig.3A, the Q9 current is shown and in Fig.3B, the MW125 vertical positions are shown, these are well correlated. If Q9 is indeed solely responsible for the beam position change at MW125, then 1 percent current increase at Q9 is equivalent to -0.03 *mrad* steering.

	At	β_V	I	II	III	IV	Unit
MW006	4.34 m	15.308 m	2.48	2.49	2.49	2.48	mm
MW060	20.7 m	13.556 m	1.34	1.29	1.31	1.11	mm
MW125	42.3 m	3.126 m	3.09	3.14	2.84	3.25	mm

Table 2

3.2 Horizontal Steering

The horizontal beam positions at MW006, MW060, and MW125 are shown in Table 3, and plotted in Fig.4A. In Fig.4B, the beam positions normalized using square root of local beta functions are shown. Again, it does not look like that the incoming beam is responsible for the beam position variations at MW060 and MW125, since the beam positions at MW006 are almost constant. Note that the quardrupoles between MW006 and MW060 are responsible to the beam position shift at MW060. It is likely that this is a combined effect of current variations of these quardrupoles. If to translate this effect into an equivalent F6 steering,

one finds out that the small changes to the currents of Q1 to Q5, shown in Table 1, are equivalent to the F6 steering of 0.26 *mrad*, which is quite large. Or one may look at it more straightforwardly, that with this small current variation, the horizontal beam position at MW060 has been changed by 5.04 *mm*.

	At	β_H	I	II	III	IV	Unit
MW006	4.34 m	3.368 m	-0.77	-0.68	-0.76	-0.87	mm
MW060	20.7 m	76.826 m	-3.82	-2.09	-6.33	-7.13	mm
MW125	42.3 m	30.882 m	3.45	4.54	0.61	-0.57	mm

Table 3

3.3 Beam Loss Pattern

The BTA loss monitor data are shown in Table 4. It has been shown in AGS Study Report No.351 that the beam is set up to scrape vertically at DH4, which is covered by the BTA114 loss monitor cable. In this experiment, it is observed that the vertical position change at MW060, which is about 11 meters upstream of DH4, is not large. The large shift at MW125 may be caused by the Q9 steering, which is downstream of DH4. Therefore, the beam loss pattern at DH4 cannot be explained by the beam vertical movement. As a comparison, the largest vertical shift at MW060 in this experiment was 0.23 *mm*. In the experiment shown in AGS Study Report No.351, it was 8.59 *mm*. On the other hand, if the beam is indeed scraping vertically at the vacuum chamber at DH4, then the beam horizontal motion can also cause large beam loss. At DH4 the standard 6.5" $\times$ 2.75" dipole vacuum chamber is used. The chamber half height of 33 *mm* applies to the middle of the chamber. Should the beam move away from the chamber center by 20 *mm*, the chamber half height is reduced by 10%, to about 30 *mm*. Meanwhile, the horizontal half width at DH4 is larger than 80 *mm*, and the half beam size with the normalized emittance of 60 π *mmmr* is about 44 *mm* for 95% particles, therefore the horizontal aperture there is not tight. Thus, the beam loss mechanism relevant to horizontal motion, observed at MW060, could be explained by the horizontal motion induced vertical scraping at DH4. The beam position at MW060 and the corresponding BTA114 loss monitor data are shown in Fig.5. They are closely correlated.

	At	I	II	III	IV	Unit
BTA023	3-10 m	1557	1478	1611	1708	*cnts*
BTA045	10-17 m	695	455	524	524	*cnts*
BTA067	17-24 m	347	357	313	318	*cnts*
BTA114	29-36 m	15120	21070	12340	13620	*cnts*
BTA137	36-43 m	7203	12112	5654	6531	*cnts*
BTA160	43-50 m	3856	6350	3381	3939	*cnts*
BTA183	50-57 m	1592	2440	1528	1803	*cnts*
BTA206	57-63 m	620	875	660	710	*cnts*
L20		2710	2370	3690	2180	*cnts*

Table 4

The jitter in the Booster extraction septum F6 has been under intensive observation and study, through the beam horizontal position at MW060, because it is correlate to substantial beam loss. In 1994 HEP run, the horizontal beam position shift at MW060 was larger than 30 *mm*, and complaints were frequently received. In 1996 HEP run, this was reduced to less than 20 *mm*, and much less complaints were received. Based on this study, we may provide an explanation for the beam loss mechanism associated with the F6 jitter, which is the horizontal beam motion induced vertical scraping at DH4 vacuum chamber. The vacuum chamber and the beam profile with the normalized emittance of 60 π *mmmr* at DH4 are shown in Fig.6, where the beam is set up to scrape the top of the vacuum chamber.

In AGS Study Report No.325, Bleser found that in 1994 run, the beam was happy with the horizontal position at MW060 from -4 *mm* to -10 *mm*. In AGS Study Report No.351, the beam horizontal position at MW060 varies from -4.49 *mm* to -10.48 *mm*, and we found that the beam loss at DH4 is because of the beam vertical steering. In this experiment, the beam vertical position has changed very little at DH4, the horizontal position at MW060, however, varies from -2.09 *mm* to -7.13 *mm*. At -2.09 *mm*, we observed the highest loss at BTA114.

4 CONCLUSION

Although the result presented in this report is neither conclusive nor completive, it strongly suggests that without eliminating the quardrupole steering, the optimization of the optics would not be possible.

A survey of the BTA optics and steering shows that most times in the HEP run, the beam was set up to scrape vertically at the vacuum chamber at DH4. This poses not only a vertical, but also horizontal, restrictions on the beam steering. The aperture there needs to open up.

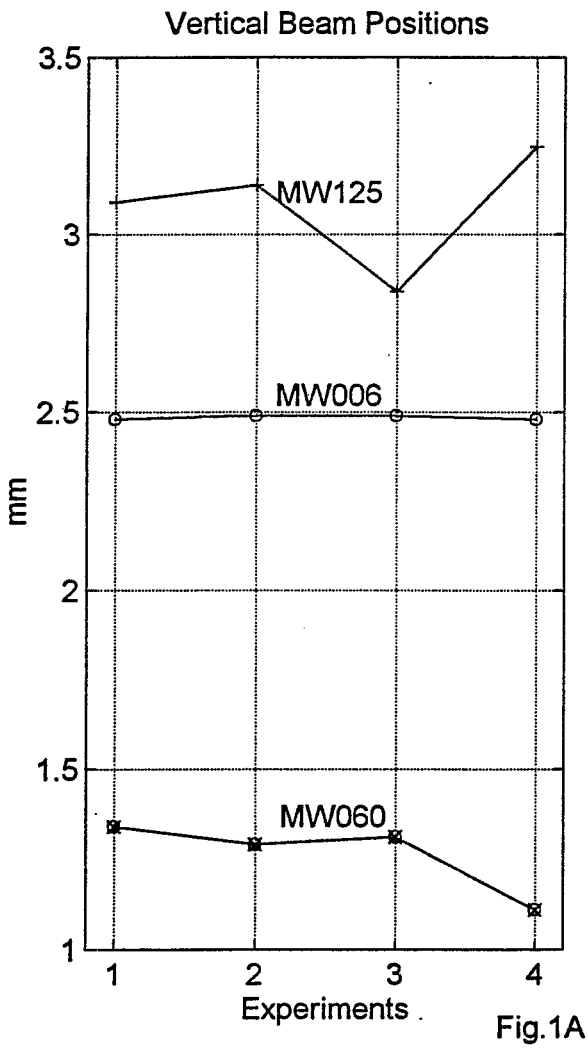
Vertical Beam Positions
3.5
3
2.5
2
1.5
1
mm
MW125
MW006
MW060
1
2
3
4
Experiments

Fig.1A

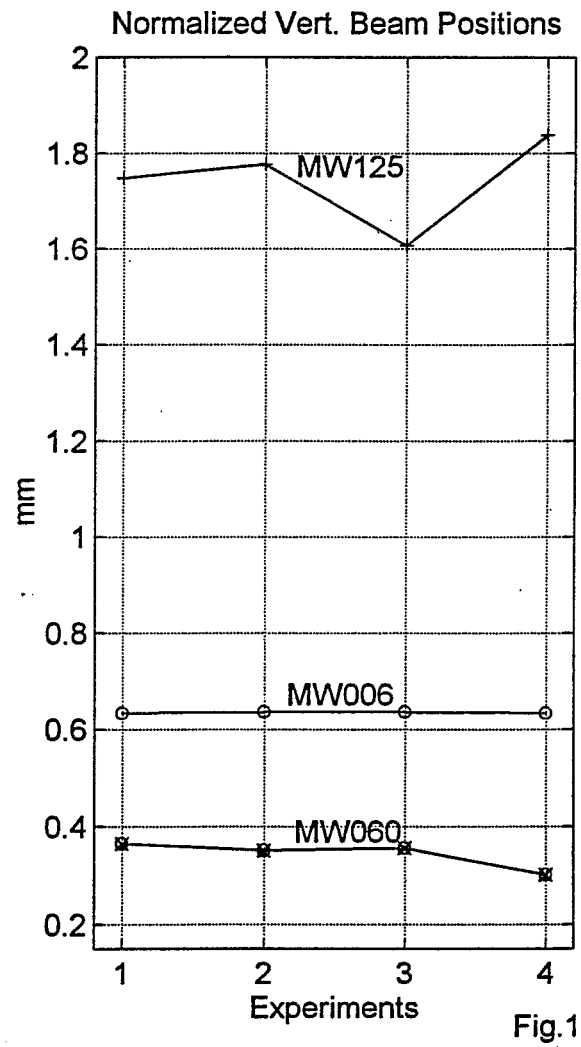
Normalized Vert. Beam Positions
2
1.8
1.6
1.4
1.2
1
0.8
0.6
0.4
0.2
mm
MW125
MW006
MW060
1
2
3
4
Experiments

Fig.1B

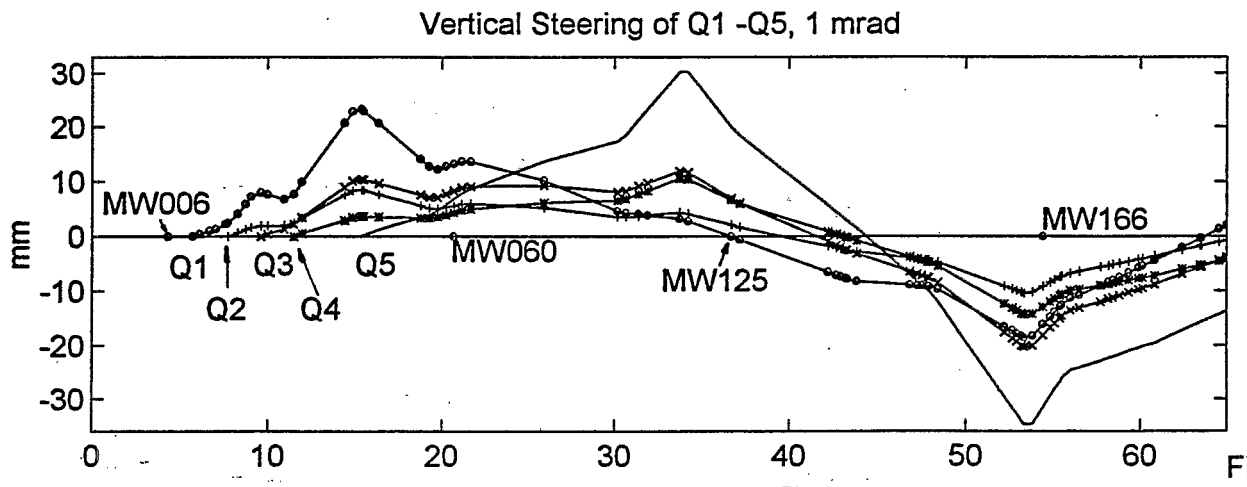
Vertical Steering of Q1 -Q5, 1 mrad
mm
30
20
10
0
-10
-20
-30
0
10
20
30
40
50
60
MW006
Q1
Q2
Q3
Q4
Q5
MW060
MW125
MW166

Fig.2A

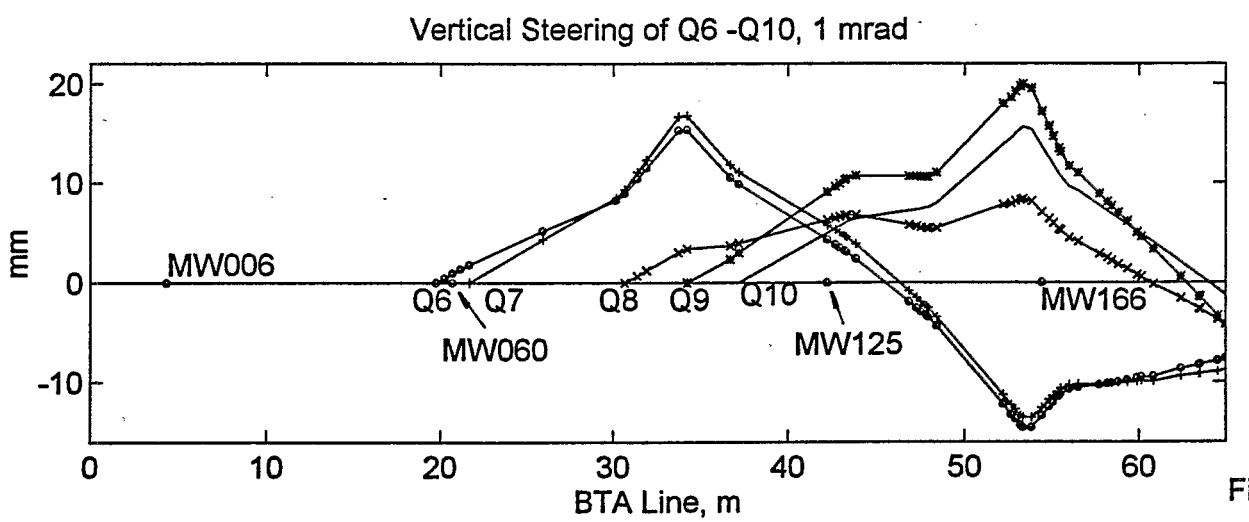
Vertical Steering of Q6 -Q10, 1 mrad
mm
20
10
0
-10
0
10
20
30
40
50
60
BTA Line, m
MW006
Q6
Q7
Q8
Q9
Q10
MW060
MW125
MW166

Fig.2B

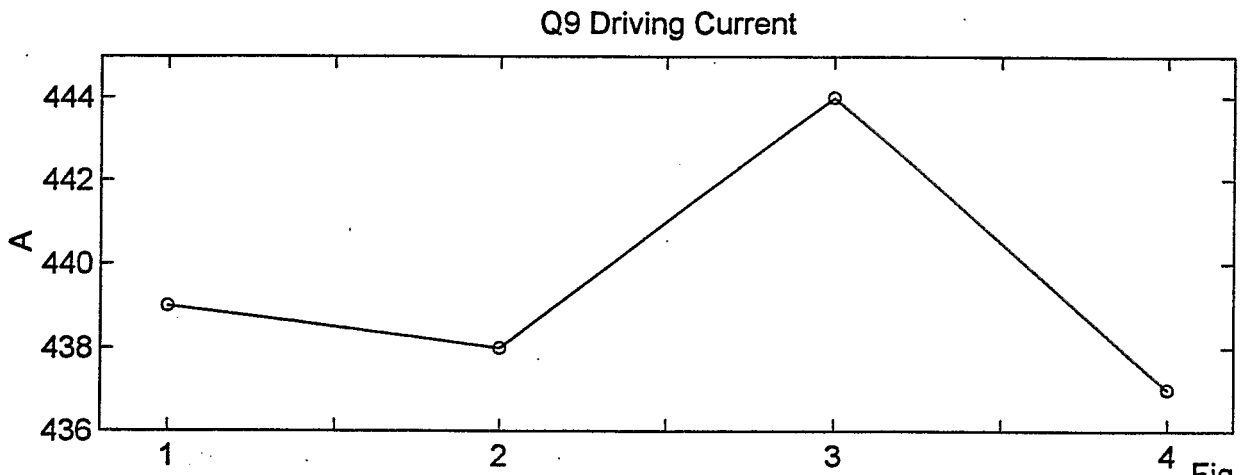
Q9 Driving Current
444
442
440
438
436
A
1
2
3
4

Fig.3A

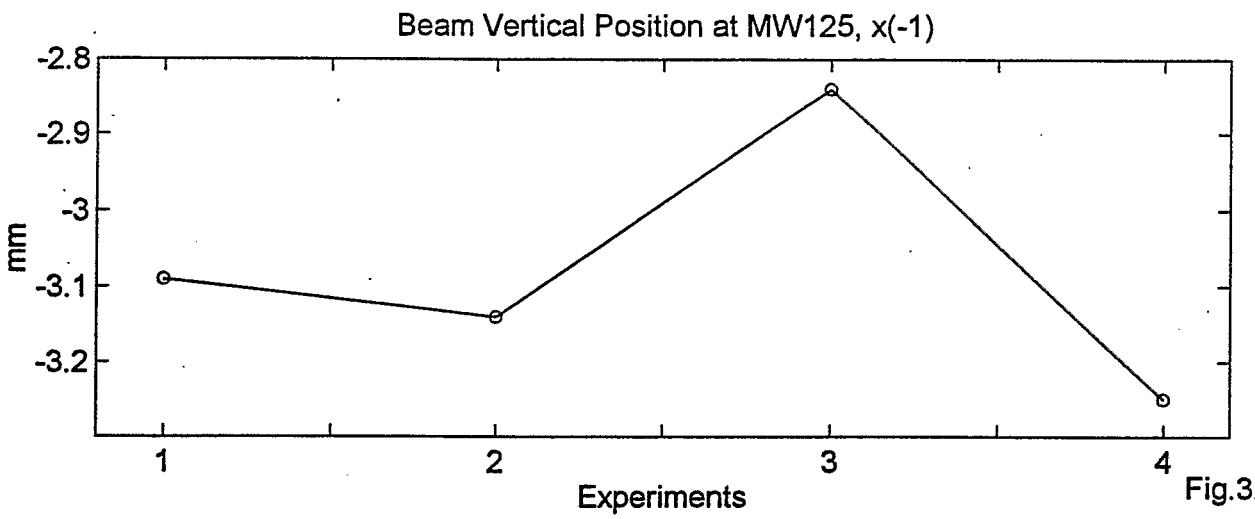
Beam Vertical Position at MW125, x(-1)
-2.8
-2.9
-3
-3.1
-3.2
mm
1
2
3
4
Experiments

Fig.3B

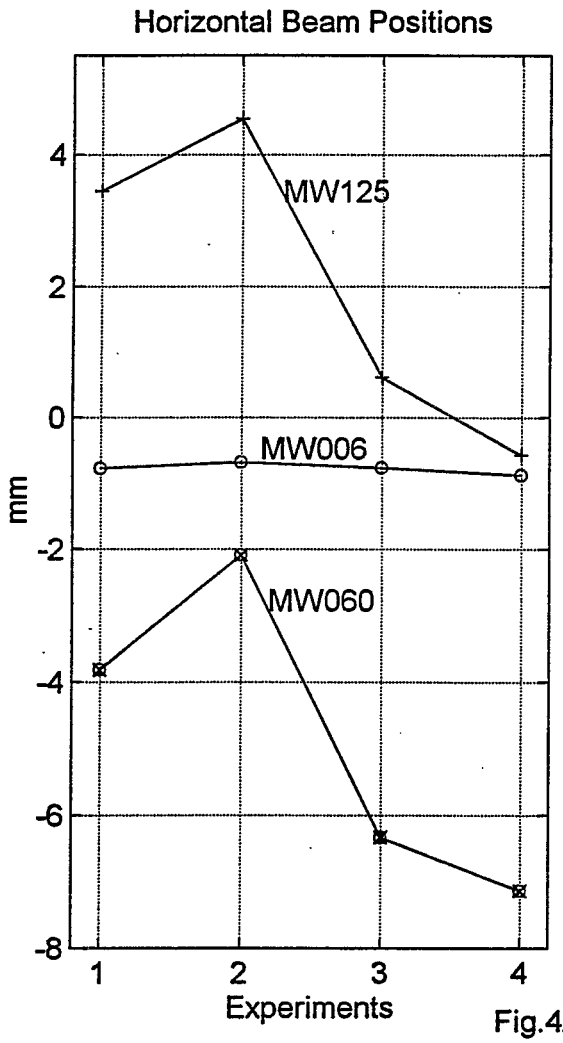
Horizontal Beam Positions
MW125
MW006
MW060
mm
4
2
0
-2
-4
-6
-8
1
2
3
4
Experiments

Fig.4A

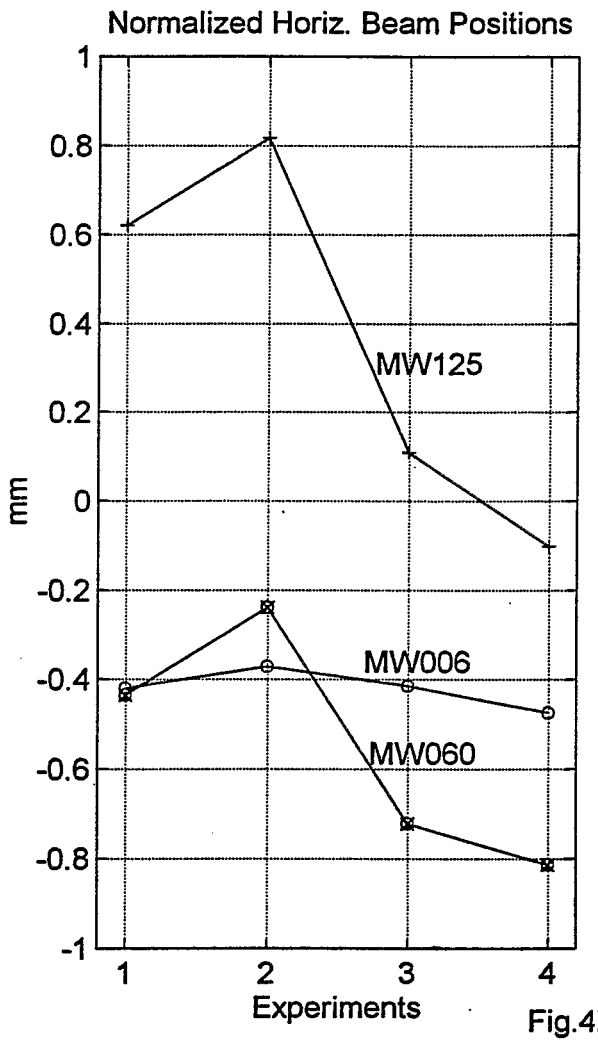
Normalized Horiz. Beam Positions
MW125
MW006
MW060
mm
1
0.8
0.6
0.4
0.2
0
-0.2
-0.4
-0.6
-0.8
-1
1
2
3
4
Experiments

Fig.4B

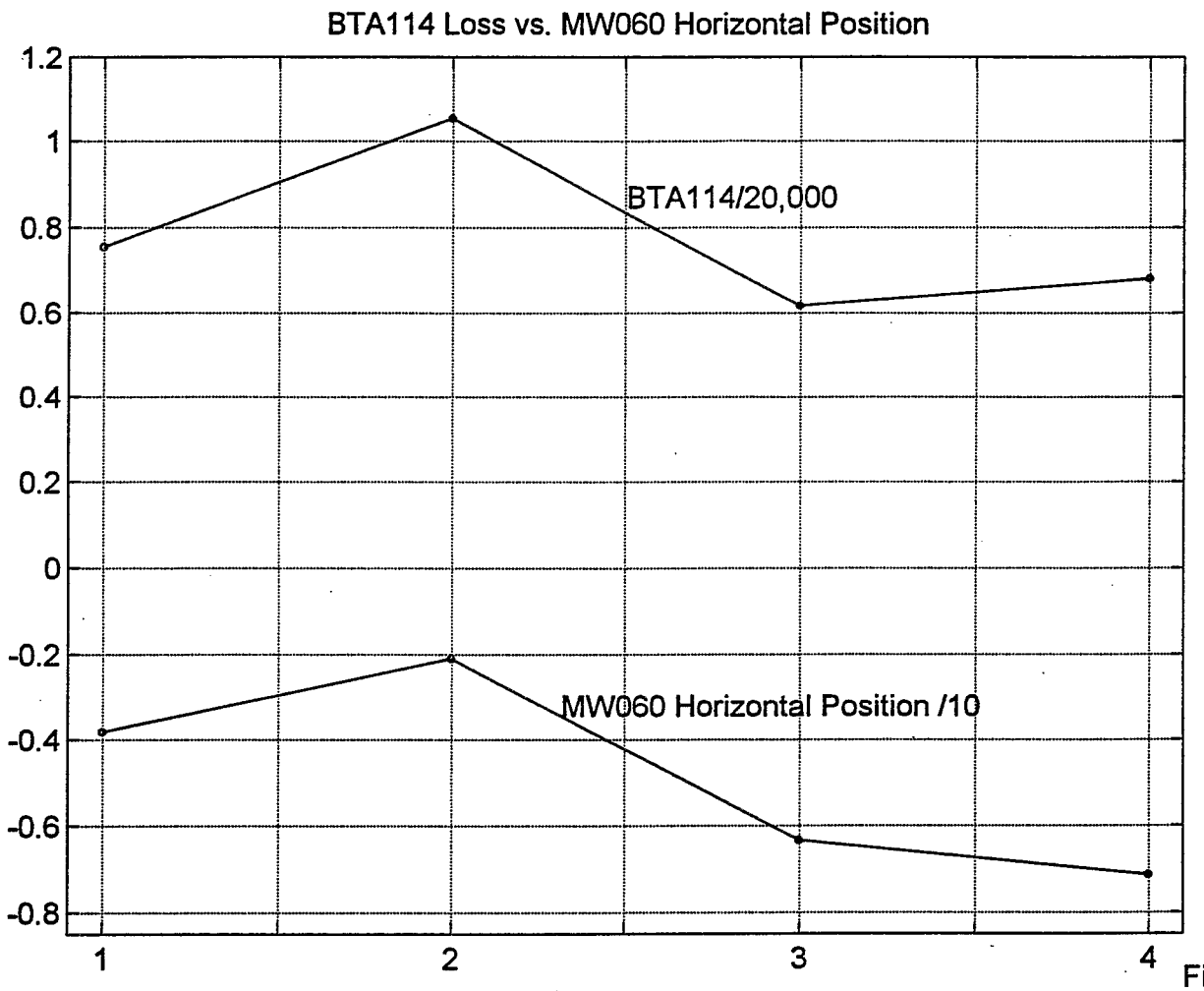
BTA114 Loss vs. MW060 Horizontal Position
1.2
1
0.8
0.6
0.4
0.2
0
-0.2
-0.4
-0.6
-0.8
1
2
3
4
BTA114/20,000
MW060 Horizontal Position /10

Fig.5

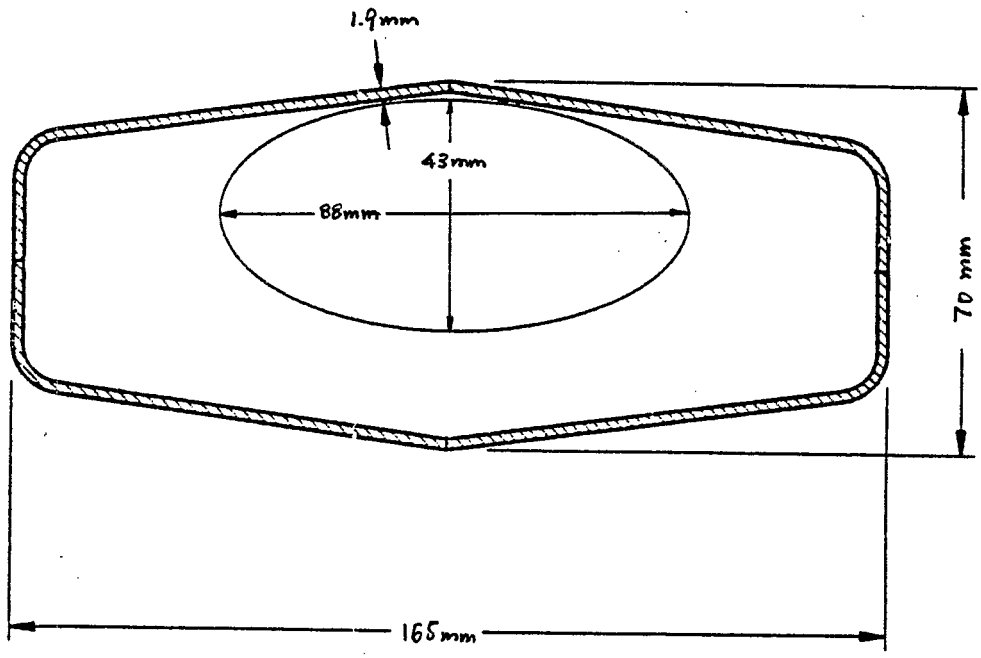

Fig.6