NOTES:

1. COMPONENTS AND HARDWARE INTERNAL TO VACUUM WHICH HAVE NOT BEEN CLEANED SHOULD BE CLEANED IN ACCORDANCE WITH SPEC. NSLS-07.12-1

ITEM NO.	QTY.	DESCRIPTION	MAT'L, DWG. NO. OR BNL NO.
1	1	FLAG DRIVE ASSEMBLY	D11-M-10591-5
2	1	FLAG HOLDER ASSEMBLY	D11-M-12131-4
3	1	MOUNTING BLOCK, TARGET	D11-M-12192-3
4	1	SUPPORT STAND	NOT DRAWN
5	1	VACUUM BOX	D11-M-10610-5
6			
7			
8	12	SCR, HEX HD .375-16 X 1.50 LG SST	BNL# T-12816
9			
10	8	SCR, HEX HD .375-16 X 1.25 LG SST	BNL# T-12812
11	4	SCR, SOC HD CAP .190-32 X .375 LG SST	BNL#T-95653
12	4	WASHER, FLAT .190 SCREW SIZE SST.	BNL# T-84116
13	1	KEY	D11-M-4533-1
14	1	THUMB SCREW	D11-M-7468-1
15	3		
16	12		
17	24	WASHER, FLAT .375 BOLT SIZE, SST	BNL# T-84132
18			
19	2	ASSEMBLY, 4" VIEWING PORT	D11-M-10673-4
20	1	BLANK OFF	D11-M-12132-2
21	8	SCR, HEX HD .375-16 X 1.00 LG. SST	BNL# T-12808
22	2	SEAL RETAINER, ø6.5 ID X .187	D05-M-2070-3
23	1	O-RING, VITON, 5.250 ID X ø.188 THK	BNL# H-30626
24	1	O-RING, VITON, 6.250 ID X ø.188 THK	BNL# H-30633

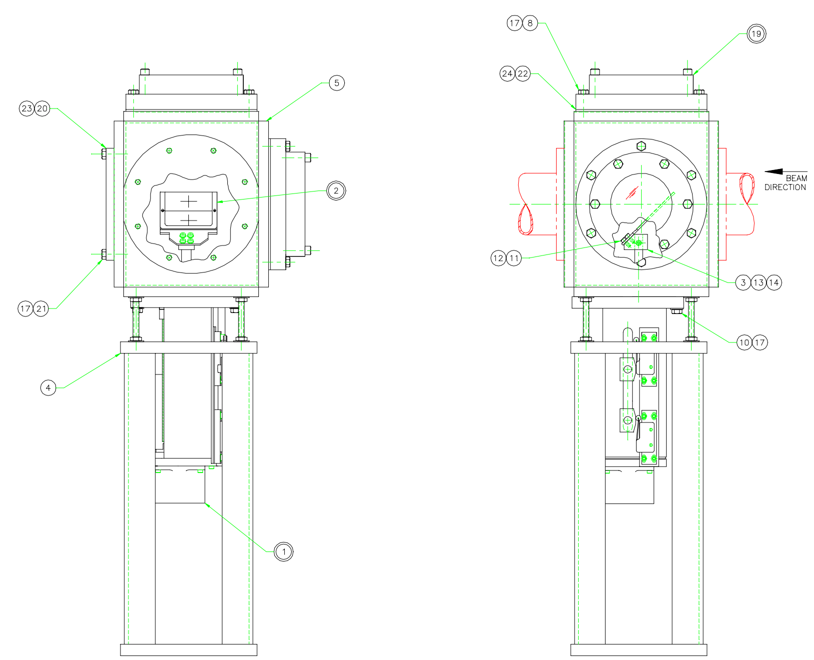

D11-M-12191-5

REV.	ZONE	ECN NO.	DATE	BY	CKR	APP.

AGS

INTERPRET DRAWING AS PER ANSI Y14.5M 1982

UNLESS OTHERWISE SPECIFIED DIMENSIONS ARE IN INCHES
DECIMAL TOLERANCES
.X ±.030
.XX ±.015
.XXX ±.005
ANGULAR TOLERANCE ± .5°

125 FINISH — BREAK SHARP EDGES MAX. .03 MIN. .01

OUTSTANDING ECN

Q.A. CATEGORY A-3 — DATE
DRAWN BY: C. LONGO 6/14/95
CHECKED BY
SAFETY APPROVAL
VACUUM APPROVAL
DESIGN APPROVAL
ENGINEER APPROVAL
SUPVR. APPROVAL

JOB NUMBER: D11-3M-189 | USED ON DWG. NO. | NO. PER ASS'Y: 1

BROOKHAVEN NATIONAL LABORATORY
ASSOCIATED UNIVERSITIES, INC.
UPTON, N.Y. 11973

BEAM EXTRACTION AREA
FLAG DRIVE ASSEMBLY
DF332 AND DF364 INSTALLATION

DRAWING NUMBER: D11-M-12191-5 — REV. A

MATERIAL: SEE P/L — SCALE: 1/2 — WEIGHT: – — SHEET 1 OF 1

1 *AUTOCAD