ITEM NO.	QTY.	DESCRIPTION	MAT'L. DWG. NO. OR BNL NO.
1	1	LINEAR MOTOR ASSY	D11-M-11827-5
2	1	VERT. VACUUM CHAMBER	D11-M-11831-5
3	1	VERT. TARGET HOLDER	D11-M-11837-4
4	2	TARGET, LONG	D11-M-11829-1
5			
6	1	GASKET, OFHC Cu 2 3/4 O.D.	I-05362
7	1	GASKET, OFHC Cu 6 O.D.	I-05368
8	1	VIEWPORT 6 O.D.	I-05497
9	16	BOLT & NUT SET, DODECAGONS	I-05384
10	6	BOLT & NUT SET, DODECAGONS 1/4-28 x 2	MDC #BA-175-12
11	1	SCREW BIND HD. SST #10-32 x 1/2	T-49264
12	2	WASHER FLAT SST #10	T-84116
13	1	WASHER LOCK SST #10	T-86720

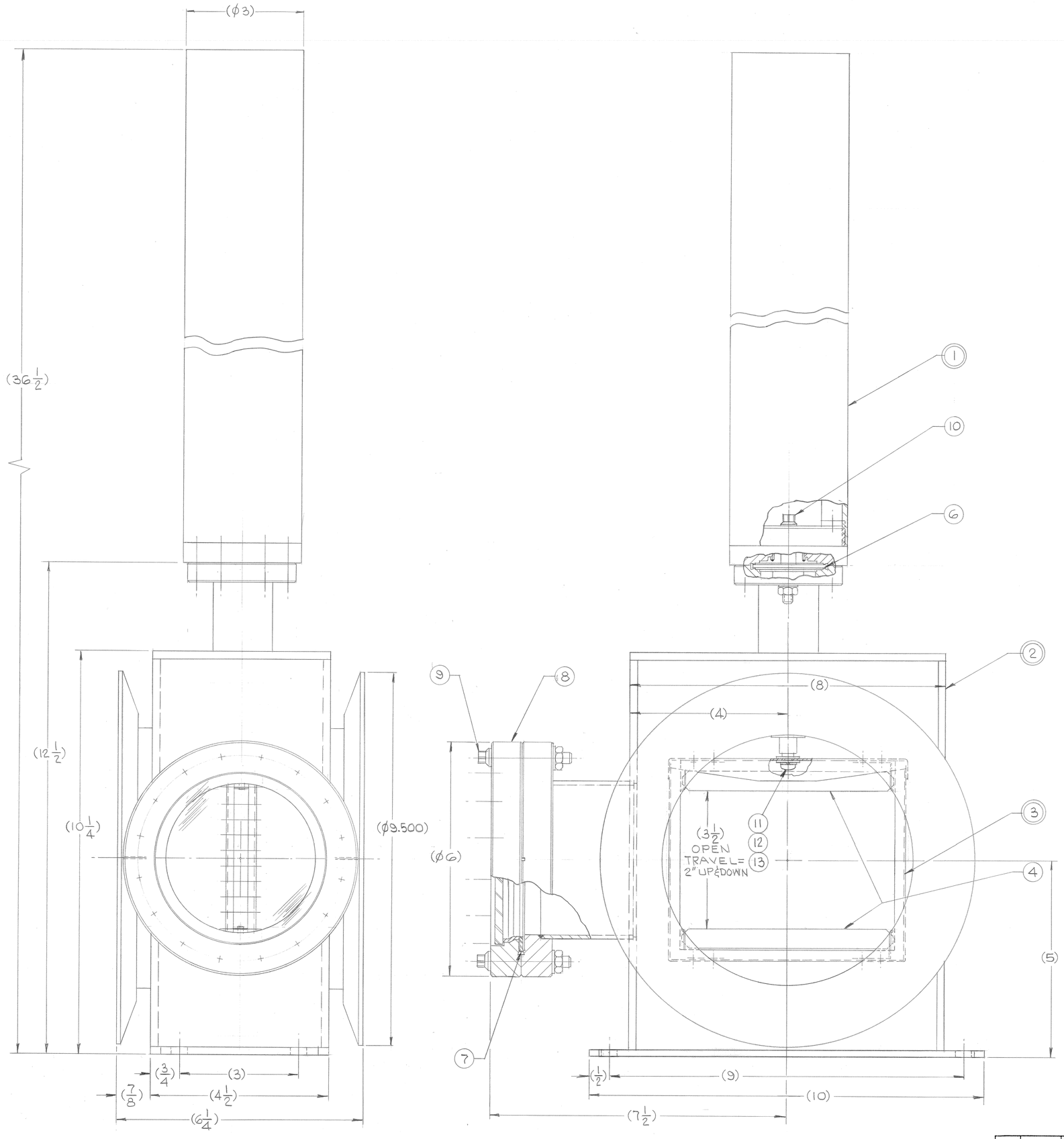

NO.REQ.	ACCT. NO.	I.L.R. NO.	ORDER NO.	DEPT.	D11-1M-152	D11-M-11190-5	1
					JOB NUMBER	USED ON DWG. NO.	NO. PER ASSY

DEC. ± ANG. ± MAX. MIN.
TOLERANCE BREAK SHARP EDGES
0-20" 20"-60" OVER 60"
FRACTIONAL TOLERANCE FINISH √

DATE	MATERIAL	SCALE	WEIGHT
6-16-88	SEE P/L	FULL	—

DRAWN BY	CHECKED BY	ENG. APP.	SUPVR.APP.
L. SADINSKY	J. SCHLEIN		

BROOKHAVEN NATIONAL LABORATORY
ASSOCIATED UNIVERSITIES, INC.
UPTON, N. Y. 11973

A G S
LINEAR MOTOR TARGETS
VERT. VAC. CHAMBER ASSY

DRAWING NUMBER: D11-M-11838 -5 REV. A

CODE # 02

D11-M-11838-5

REV.	ZONE	DESCRIPTION	BY	DATE	CKR	APP

BNL FORM NO. 1610