| REV. | DESCRIPTION | BY | DATE | CKR | APP |
|---|---|---|---|---|---|
| | | | | | |

D11-M-11822-1

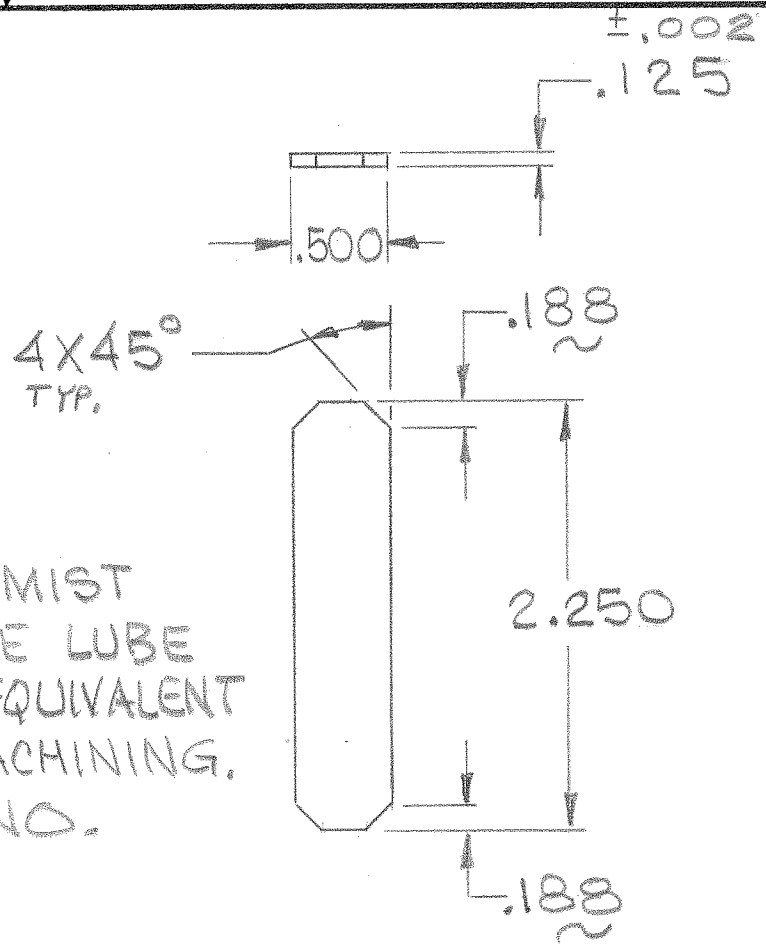


NOTES:
1- USE ONLY C/M COOL, KOOL MIST #77, MOBIL CUT-MAX, MISSILE LUBE #5 OR A.G.S. APPROVED EQUIVALENT FOR LUBRICANT WHEN MACHINING.
2- BAG & TAG WITH DWG NO.

CODE #02

| NO. REQ. | ACCT. NO. | I.L.R. NO. | ORDER NO. | DEPT. | JOB NUMBER | USED ON DWG. NO. | NO. PER ASS'Y |
|---|---|---|---|---|---|---|---|
| | | | | | D11-IM-152 | D11-M-11827-5 | 1 |

| | |
|---|---|
| DEC. ±.005 ANG. ± 0°-30' TOLERANCE | MAX. .010 MIN. .005 BREAK SHARP EDGES |
| ± 0-20" 1/64 20"-60" — OVER 60" — FRACTIONAL TOLERANCE | 63 ✓ FINISH |
| 4-27-88 DATE | BORON CARBIDE MATERIAL |
| FULL SCALE | WEIGHT |
| L. SADINSKY DRAWN BY | ZEBUDA CHECKED BY |
| ENG. APP. | A5038 SUPVR. APP. |

**BROOKHAVEN NATIONAL LABORATORY**
ASSOCIATED UNIVERSITIES, INC.
UPTON, N. Y. 11973

A. G. S.
LINEAR MOTOR TARGET

D11-M-11822 -1 — DRAWING NUMBER
A — REV.

BNL FORM NO. 157D