ESA
Series
User Manual

Galil Motion Control, Inc.
575 Maude Court
Sunnyvale, CA 94086-2803
Phone: (408)746-2300
Fax: (408)746-2315

Rev (9-90)

LIST OF CONTENTS

		Page
1.	Description	3
2.	Type designation	4
3.	Technical specifications	4
4.	Terminal Description	5
5.	Operation of the servo control	9
	Velocity mode	
	Current mode	
	Current limits	
	Current feedback	
6.	Installation procedures	13
	Mounting	
	Wiring	
	Load inductance	
	DC power supply	
7.	Start up Procedures	14
	Inputs	
	Operation in velocity mode	
	Operation in current mode	
	Differential amplifier connection	
8.	Amplifier adjustment and diagnostics	18
	Balance adjustment	
	Current limit adjustment	
	Current limits contour adjustment	
	Response adjustment - velocity loop	
	Current gain and response	
	Adjusting trimmers - summary	
	LED diagnostics	
9.	Protections	26
10.	Drawings	28
	External dimensions	
	Electronic schematics	

1. Description

The ESA is a unique PWM servo amplifier designed for DC servo motors. It utilizes power MOSFETs which contribute to its high efficiency and compact design.

The ESA is constructed from two PCBs mounted on a heat sink plate. The lower board contains the power switching transistors which drive the motor, terminals for the power stage, the switch mode power supply and the protection logic. The upper PCB contains the control logic, terminals for the control stage, adjusting trimmers and indication LED's.

The ESA is manufactured in three mounting versions:

- Two panel mount versions: horizontal and vertical.
- Standard rack modules with DIN 41612 connectors.

Standard features

- Four quadrant operation allows motor acceleration and deceleration under power in both CW and CCW directions.
- Internal DC to DC converter allows for operation from a single supply.
- 20KHz switching frequency.
- 2KHz current loop response.
- Zero deadband.
- Better than 1% linearity.
- 3 inputs: gain adjustment.
- Motor current monitor.
- Inhibit/fault indication (logic level).
- Extra differential input:
  A differential amplifier is provided for signal buffering, inversion or common-mode elimination.
- Remote control functions: motor on-off, CW and CCW disable.
- Adjustable compensation.
- Adjustable Continuous and peak current limits.
- Dynamic contouring of continuous and peak current limits.
- Input balance (offset).
- LED diagnostics.
- Removable terminals (Panel mount type) for easy installation and service.
- Operation in two velocity modes (Tacho or armature voltage feedback) or current mode.

The amplifiers are fully protected against the following faults:

* Under/over voltage.
* Shorts between: outputs, output to ground, output to supply.
* Wrong supply connection.
* Insufficient load inductance.
* RMS current limit.
* Excess temperature.
* Loss of tacho signal.

2. Type Designation

Type designation:ESA-5/75XY

X	Y
H - horizontal mount	C - Current mode
V - Vertical mount	T - Velocity mode-Tacho feedback
R - Rack mount	A - Velocity mode-Armature voltage feedback

Ordering example: ESA-5/75RT

3. Technical Specifications

Type	DC Supply		Current limits		Size		Weight
	Min	Max(V)	Cont.	Peak(A)	Panel	Rack	Kg
ESA-5/75	20	75	5	12	187x112x60	3U/12T	0.7
ESA-10/75	20	75	10	25	187x112x60	3U/12T	0.7
ESA-15/75	20	75	15	37	200x112x100	3U/19T	1.4
ESA-10/160	40	160	10	25	200x112x100	3U/19T	1.4
ESA-16/160	40	160	16	40	245x200x100	6U/19T	3.0
ESA-16/200	60	200	16	40	245x200x100	6U/19T	3.0
ESAF-20/75	20	75	20	40	187x112x60	3U/12T	0.7
ESAF-8/160	40	160	8	16	187x112x60	3U/12T	0.7
ESAF-12/160	40	160	12	24	187x112x60	3U/12T	0.7
ESAF-20/160	40	160	20	40	245x200x60	6U/12T	1.3
ESAF-30/160*	40	160	30	60	245x200x135	6U/19T	3.5
ESAF-25/200*	60	200	25	50	245x200x135	6U/19T	3.5

* Only these types include integral fan.
- 20 KHz switching frequency.
- Output voltage is 90% of input voltage.
- Continuous current limit - adjustable from 0.
- Efficiency at rated current - 95%.
- Outputs voltages of +7.5V and -7.5V for external use (20mA each)

4. Terminal Description

H,V types	R type	
1	(18,20)*	Armature output. This output will be positive when a positive signal is fed to one of the inputs.
2	(22,24)*	Power input common.
3	(26,28)*	Power input positive (+Vs).
4	(30,32)*	Armature output. This output will be negative when a positive signal is fed to one of the inputs.
5	(10a)	Input 1 - high gain. ┐
6	(10c)	Input 2 - mid gain. ├ See 7.1 for details
7	(12a)	Input 3 - low gain. ┘
8	(12c)	Motor current monitor. This output can be used to adjust the current limits of a motor without loading or measuring the actual motor current. See 8.2 for details.
9 }	(16a,c)	Circuit common.
10 }		The circuit common is internally connected to the power
14 }		supply common.
11	(14c)	Negative input of differential amplifier.
12	(2a)	Positive input of differential amplifier.
13	(2c)	Output of differential amplifier. See 7.4.
15	(4a)	Inhibit input This terminal provides a means of disabling the amplifier (both logic and power stages) by applying low level input voltage.**
16	(4c)	Inhibit indication output Whenever the amplifier is inhibited, whether by an internal or external cause, this open collector output goes low state (Max sink current 10mA).
17	(6a)	CW disable Low level input voltage** will disable half of the power bridge and rotation in one direction.
18	(6c)	CCW disable Low level input voltage** will disable half of the power bridge and rotation in one direction.
19	(8a)	-V stabilized (-7.5V), 20mA external load.
20	(8c)	+V stabilized (+7.5V), 20mA external load.

* Not applicable for ESA 16/160, 20/160, 16/200, 30/160, 25/200 R types. In these types an additional power connector (No. 2 in fig. 3) is installed with the following pin assignment:

4,6,8	Armature output. This output will be positive when a positive signal is fed to one of the inputs. All three terminals must be connected.
12,14,16	Power input common. All three terminals must be connected.
20,22,24	Power input positive (+V s). All three terminals must be connected.
28,30,32	Armature output. This output will be negative when a positive signal is fed to one of the inputs. All three terminals must be connected.

** Min. low level input -7V, Max +1V.
Source sink current capability - 2mA min.

Remarks:

1. ESA 30/160,25/200R: terminals 30a,c and 32a,c of connector no.1 in Fig. 3, supply +24VDC (300mA) for fan (32a,c Common).
2. All terminals indicated in the following paragraphs are related to H and V types. R type terminals appear in brakets.

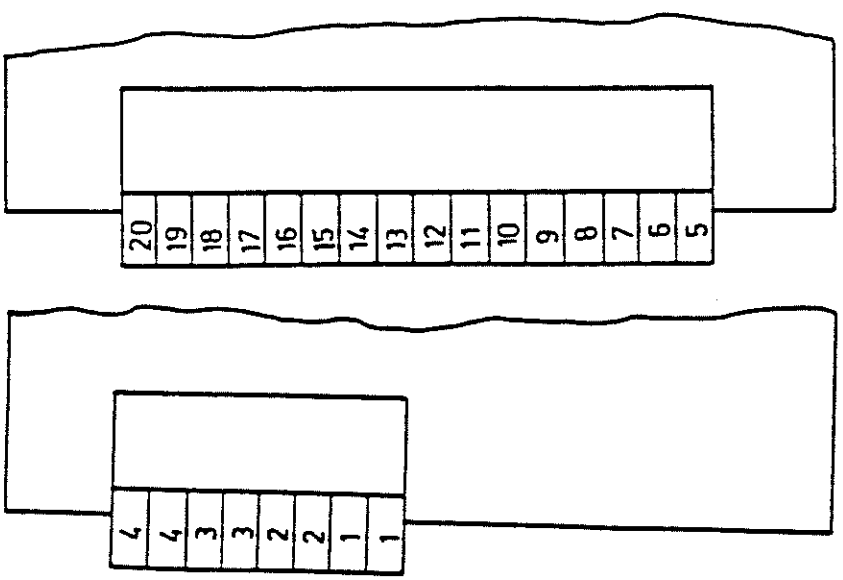

Fig. 1

Terminals - H and V types

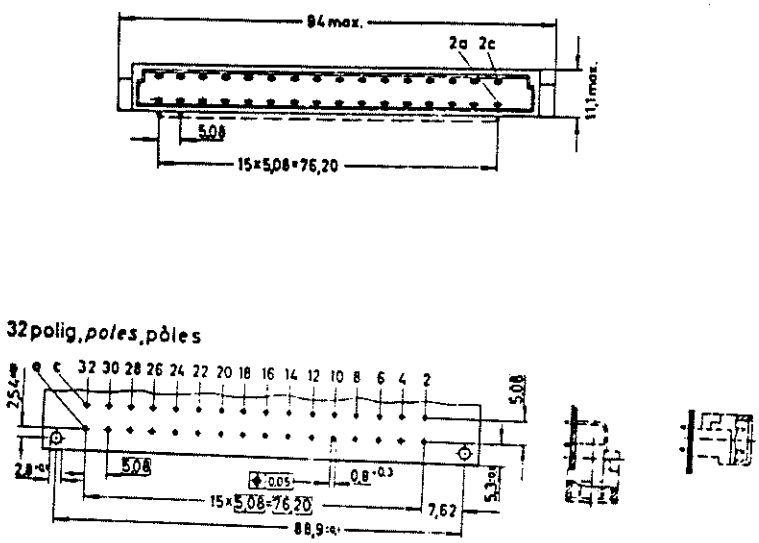

Fig. 2

Terminals - ESA 5,10,15,20/75, 8,10,12/160 R type

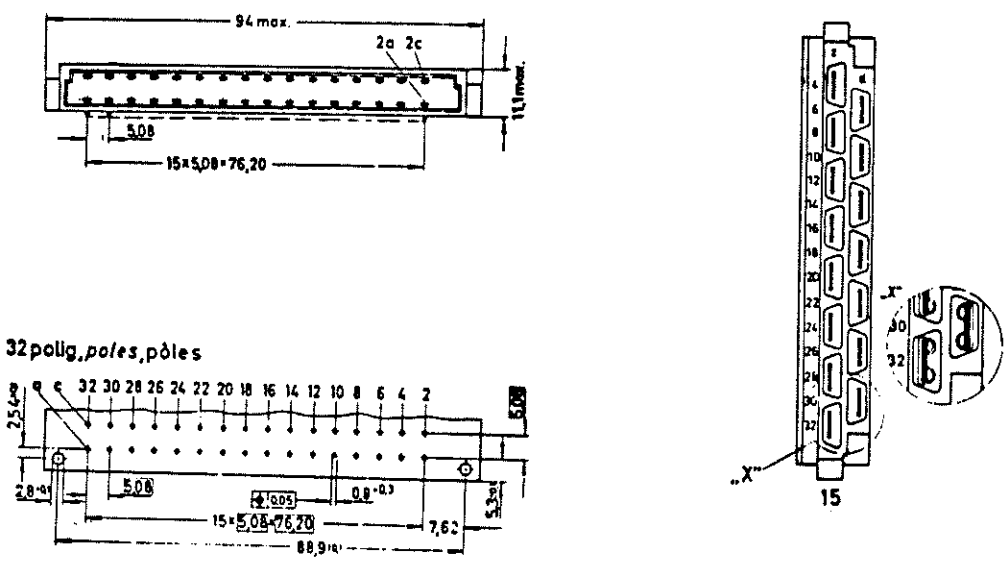

Connector no. 1 Connector no. 2

Fig. 3

Terminals - ESA 16,20,30/160, 16,25/200 R type

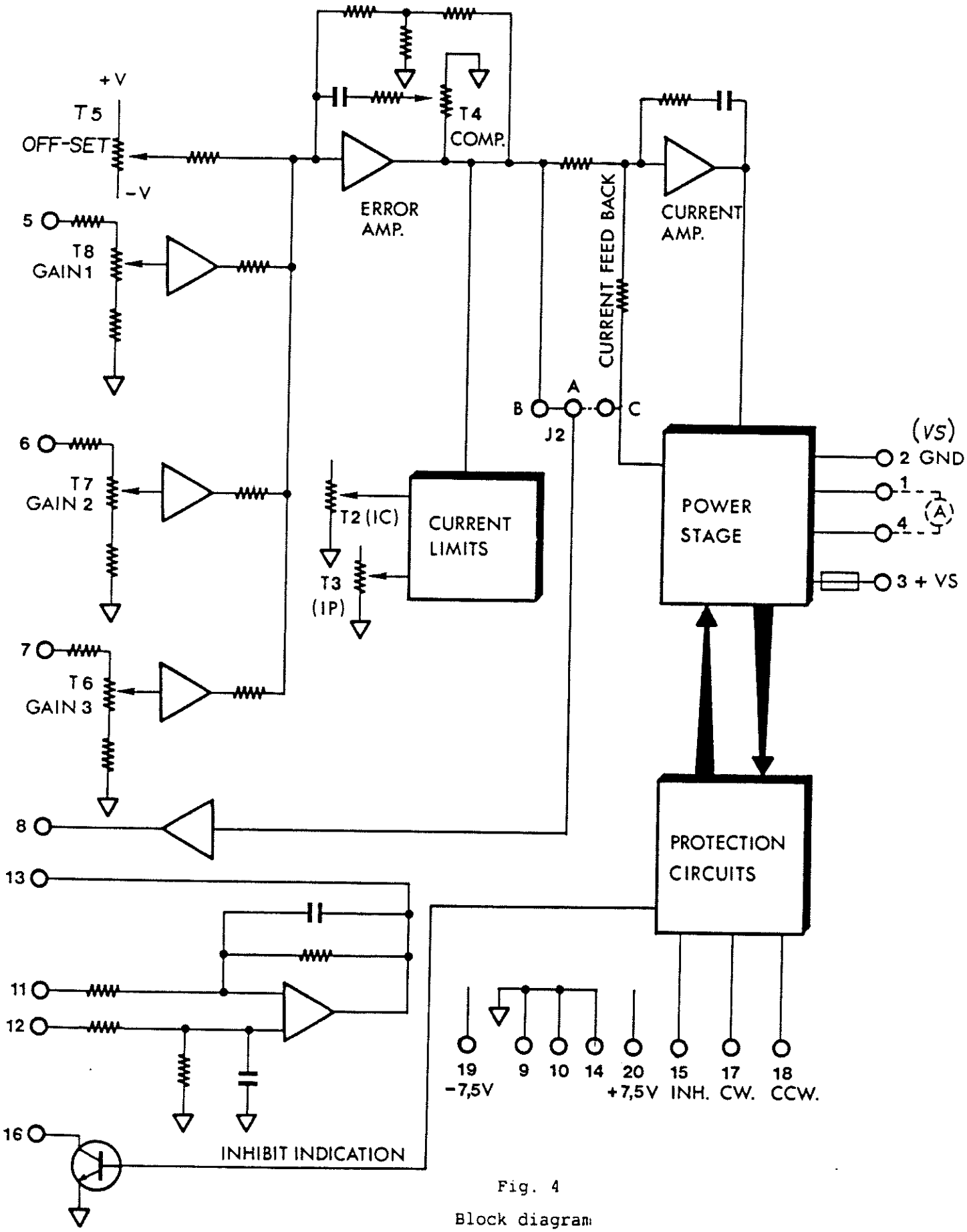

Fig. 4

Block diagram

5. Operation of the servo control

The amplifiers can be operated in two basic modes:

A. Velocity mode

B. Current mode

The difference between these two modes is in the way the operational amplifier U4/4 is employed.

5.1 Velocity mode

5.1.1 Velocity loop

In this mode op amp U4/4 is employed as a high gain error amplifier. The amplifier sums velocity command and the tachogenerator feedback signal, and provides the necessary servo compensation and gain adjustments, resulting in stable, optimum servo operation.

This op amp is configured with two feedback paths:

One, in the form of a resistive T network, controls the DC gain of this amplifier. The equivalent value of a T network is given by:

$$R_f = \frac{R43 x R44}{R51}$$

Resistor R51 is mounted in soldering terminals so it can be changed easily whenever the DC gain of the error amplifier is to be changed. The AC gain is controlled by C19, R14 and T4. Maximum AC gain is obtained with T4 set fully CW. Setting T4 fully CCW removes AC gain and no lag in response occurs.

R14 and C19 are mounted in soldering terminals and can be easily replaced in cases when T4 range is not enough to get optimum response (See 8.4 for details).

The output of the error amplifier is:

$$Vo=(V_1 G_{v1} + V_2 G_{v2} + V_3 G_{v3}) x \left[\frac{1 + SxC19xR14}{1 + SxC19xR14(1 + R_f x K_4/R14)} \right]$$

V_1, V_2, V_3 - Input signals

G_{v1}, G_{v2}, G_{v3} - Gain of inputs. See 7.1 for details

K_4 = Position factor of the wiper of T4.

Full CW = 1

Full CCW = 0.01

5.1.2 Current loop

Current loop control is obtained by op amp U4/1 (Current amplifier) and R50, C20 which form a lag-lead network for current loop.

The standard amp is equiped with R50 and C20 to get optimum current

response for an average motor in this power range. These components are mounted in soldering terminals.

5.2 Current mode

In order to operate the servo amplifier as a current amplifier, the velocity loop should be disabled. This is done by converting the error amplifier into a low gain DC amplifier which has a flat response beyond the desired current bandwidth. In this mode, R51 and R14 have to be omitted from the circuit.

5.3 Current limits

The amplifier can operate in the following voltage-current plane:

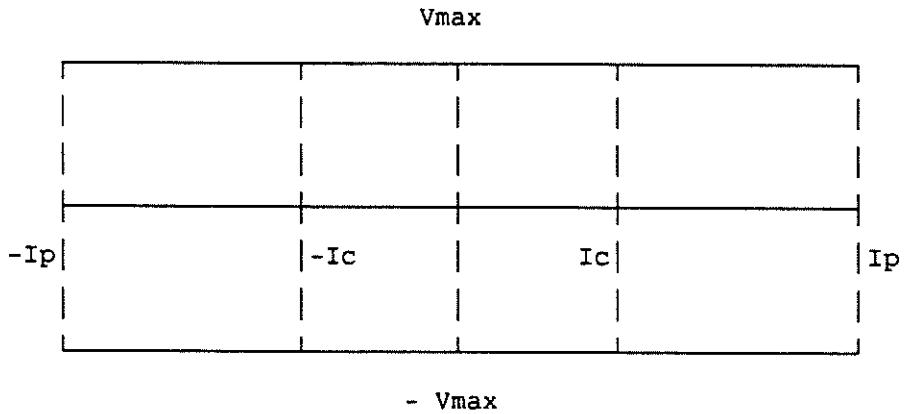

Ic - Continuous current Ip - Peak current

Fig. 5: Voltage-Current plane

Each amplifier is factory calibrated to have this shape of voltage-current operating area with rated values of continuous and peak current limits. In addition the current limit function has two standard features which are specially designed in order to protect all types of DC motors from small ironless motors up to heavy duty iron core motors:

* The peak current limit is time dependant.
* Dynamic conturing of continuous and peak current limits.

These features are explained in 5.3.1 and 5.3.2.

5.3.1 Time dependant peak current limit

The peak current is so designed that its duration is a function of the peak amplitude and the motor operating current. The maximum peak current is available for 1 second. The duration of Ip is given by:

$$Tp = 2.2\ln \frac{Ip - Iop}{Ip - Ic}$$

Iop - Actual operating current before the peak demand.

An example of this feature is given in fig. 6.

Upper trace: 13A peak
3.2s duration
Middle trace: 16A peak
1.8s duration
Lower trace: 22A peak
1.1s duration

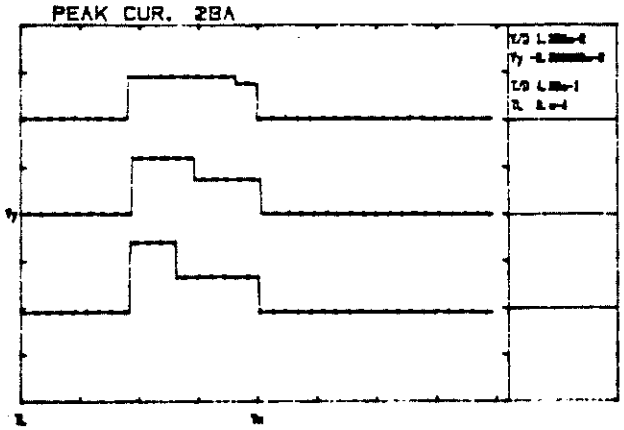

Fig. 6

Peak current test

5.3.2 <u>Dynamic contouring of continuous and peak current limits</u>

Most of the big iron core servo motors have reduced continuous current limits at high speeds (Fig. 7). This phenomenon is due to iron losses which become significantly high as speed increases and this leads to reduction of the continuous current limit.

The ESA amplifiers have the features which enable the user to define the current limit envelope as closely as possible to the motor operating envelope defined by the motor manufacturer.

Complete discussion and procedures are given in paragraph 8.3.

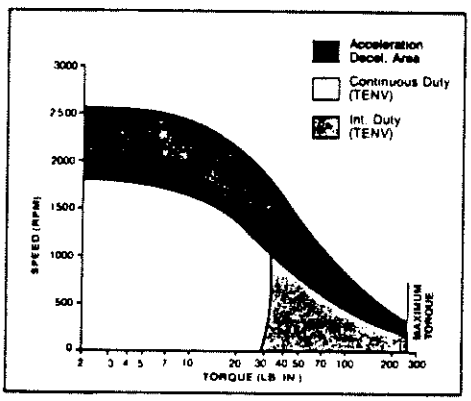

Fig. 7

Typical operating envelope of iron core motor

5.4 <u>Current feedback</u>

Current feedback is obtained by measuring the voltage drop across current sensing resistors. This is compared to the error amplifier output and the error is processed by the current amplifier to provide voltage command to the PWM section.

The actual motor current can be monitored by arranging J2 as follows:

A - B	Open
A - C	Short

The current monitor in this case has the same scale as given in 8.2.

5.5 Amplifier response in current mode

This amplifier is designed to have a linear transfer function and flat current loop frequency response up to 2KHz. These features are plotted in Fig. 8-11.

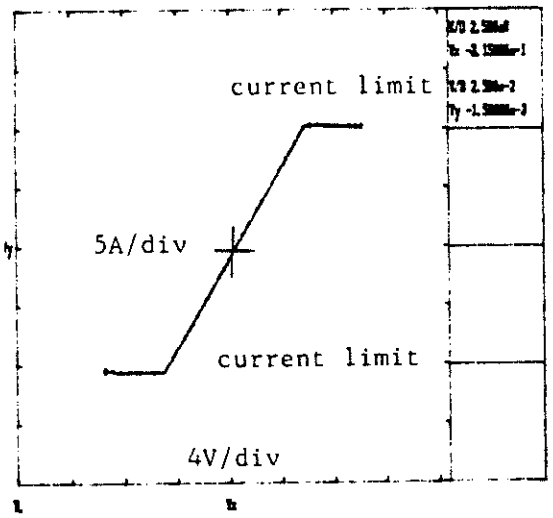

Fig. 8
Current Vs input voltage

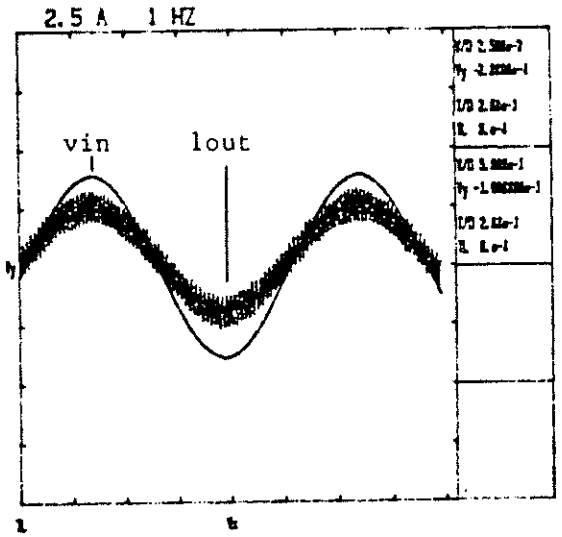

Fig. 9
1Hz Frequency response

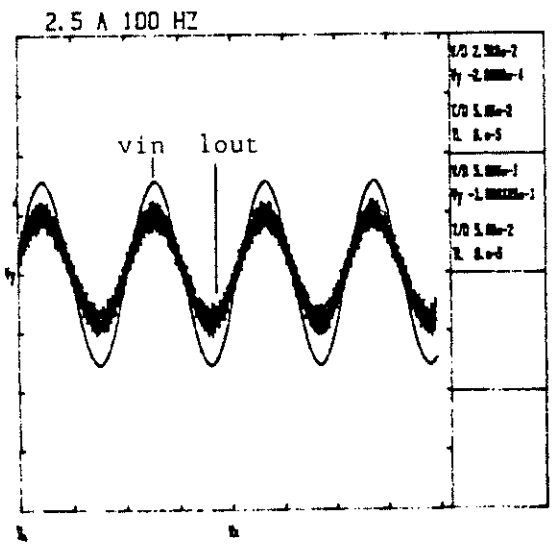

Fig. 10
100Hz frequency response

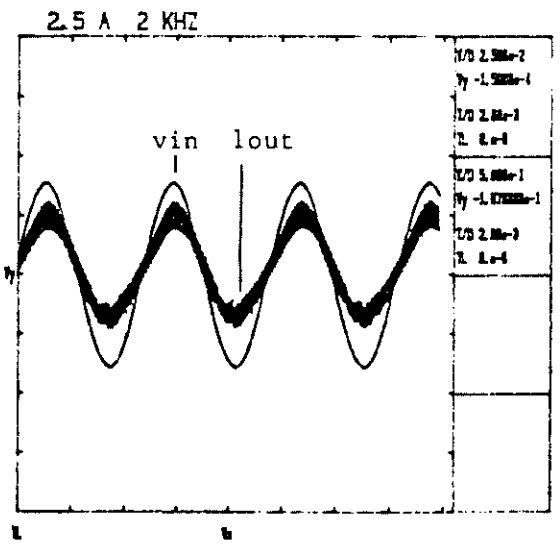

Fig. 11
2KHz frequency response

6. Installation procedures

6.1 Mounting

The ESA series dissipates its heat by natural convection execpt ESAF types which are fan cooled. For optimum dissipation the amplifiers have to be mounted with the fins in vertical position.

6.2 Wiring

a) Twist all power leads to minimize noise pick-up and emission.

b) Use twisted pairs or shielded cables for connecting the signal command and the tachometer. Avoid running these leads in close proximity to power leads or other sources of EMI noise.

c) Minimize lead lengths as much as is practical. Although the amplifier is protected against long (inductive) supply wires it is recommended to keep the leads as short as possible.

d) After wiring is completed, carefully inspect all conditions to ensure tightness, good solder joint etc.

6.3 Load inductance

The total load inductance must be sufficient to keep the current ripple within the limits (10% of rated current is recommended). The armature current ripple (Ir) can be calculated by using the following equation:

$$Ir = 2.5 \times 10^{-2} \times Vs / L$$

L - load inductance in mH.

Vs - Voltage of the DC supply in Volts.

If motor inductance does not exceed this value, a choke should be added (on the motor branch) summing together the required inductance

$$Lch = L - Larm$$

Lch - Choke inductance

Larm - Armature inductance

6.4 DC power supply

DC power supply can be at any voltage in the range defined within the technical specifications. It must have the capability to deliver power to the amplifier (including peak power), without significant voltage drops and without high voltage ripple. Any voltage below the minimun or above the maximum will disable the amplifier.

While driving high inertia loads, the power supply must be equipped with a shunt regulator, otherwise the amplifier will be disabled whenever the capacitors are charged above the maximum voltage.

6.5 Transformer

In many cases, the common of electronic instruments is connected to the neutral of the AC power line (110 or 220VAC).
This means that while connecting a non isolated instrument (scope, signal generator, terminal ect.) to the ESA, the ESA common is also connected to the AC line neutral.

In order to avoid destruction of the amplifier in those cases the user must take the following precautions:

- Use only an isolation transformer for the power supply of the amplifier.

- The common of any additional non-isolated instrument must be connected only to the amplifier common.

No warranty will be valid if these precautions are not taken.

7. Start - Up Procedures

7.1 Inputs

In order to meet wide range of input voltages and tachogenerator outputs, the amplifier is equiped with 3 different gain inputs. Each input is buffered by a voltage follower having high input impedance to isolate the input from the rest of the circuit.

Care must be taken not to apply input voltage above the max. input voltage as this will cause the input op amp to operate beyond its limits (5V) and in extreme cases may even damage the op amp.

Max. voltage (Vin) for each input can be calculated using the following relation:

$$Vin \leq \frac{5 + (4 \times Rsi \times 10^{-4})}{Ki} \quad \text{(Volt)}$$

The impedance of each input is given by:

$$Rin = (12.7 \times 10^{3}) + Rsi \quad \text{(Ohms)}$$

The current gain of each input in velocity mode is given by:

$$Gv = \frac{2 \times 10^{8} \times Ic \times Ki}{(12.7 \times 10^{3} + Rsi) \times R51} \quad \text{(Amp/Volt)}$$

The current gain of each input in current mode is given by:

$$Gc = \frac{18 \times 10^{3} \times Ic \times Ki}{(12.7 \times 10^{3}) + Rsi} \quad \text{(Amp/Volt)}$$

Rsi - Series resistor of each input:

Input 1 - R130

Input 2 - R96

Input 3 - R95

Ic - Amplifiers rated continuous current limit.

Ki - Position of wiper of trimming potentiometer (T6, T7, T8).

Ki = 0.2 when trimmer is fully CCW

Ki = 1.0 when trimmer is fully CW

Values may deviate in ±10% due to trimmer basic accuracy.

Standard amplifier is equipped with input resistors that give the following input parameters:

Amplifier current rating:	5-12A	15-20A	25-30A
Max input voltage at fully CW input trimmer (K i =1)*:			
Input 1	8.6	8.6	8.6
Input 2	19.7	19.7	19.7
Input 3	41	41	41
Input impedance (Kohm)* for any K i value:			
Input 1	22.7	22.7	22.7
Input 2	52.9	52.9	52.9
Input 3	106	106	106
Input gain (A/V) in current mode (K i =1):			
Input 1	1.6-7.9	2.3-11.8	4.0-20
Input 2	0.6-3.4	1.0-5.1	1.7-8.5
Input 3	0.3-1.7	0.5-2.5	0.8-4.3
Input gain (A/V) in velocity mode with R51=17.6ohm (K i =1):			
Input 1	1000-5000	1500-7500	2500-12500
Input 2	430-2100	630-3150	1050-5250
Input 3	210-1070	320-1600	530-2700

* Those ratings are identical for both current and velocity modes.

7.2 Operation in velocity mode

7.2.1 Feedback In General

The feedback element must be connected for negative feedback. This negative feedback will cause the difference between the command signal and the feedback signal to approach zero. This difference is called the error signal. The error signal tells the amplifier whether to speed up or slow down the motor and by how much.

The polarity of the ESA servo amplifiers is such that a positive input signal results in a positive voltage at terminal 1 (18,20) with respect to terminal 4 (30,32).

7.2.2 Velocity control using armature voltage feedback

Armature voltage may be used as velocity feedback in all cases when low regulation ratio and speed accuracy are acceptable. Using the differential amplifier to adjust its value, this voltage can be obtained at terminal 13 (2c). Attention must be paid not to saturate the amplifier by observing the following restrictions:

R132=R134

R131=R133

C32 = C33 = 0.1-0.47μF, ceramic capacitor.

1) $\frac{R133}{R132} < \frac{5}{Vs}$ 2) $R132 = R134 \geq 10Vs^2$

Vs is the DC voltage of the power supply.

The velocity loop is closed by connecting the following terminals:
Terminal 1 (18,20) to terminal 11 (14c).
Terminal 4 (30,32) to terminal 12 (2a).
Terminal 13 (2c) to terminal 5 (10a).
Terminal 6 (10c) is used for the input command.
Maximum speed can be adjusted by T8 or T7. Reducing the DC and AC gains of the error amplifier by increasing C19 and R51 is recommended. The final values depend on the type of motor and mechanical load, so optimum results will be achieved by the empirical method. Using this method a speed range of 20:1 and ±3% speed accuracy may be achieved.
IxR trimmer will be installed only if the amplifier is designated with "A". This trimmer is used to compensate velocity drop due to IxR losses in the motor armature. Adjustment of IxR compensation should be done as follows:

a. Run motor at 2/3 of nominal speed.
b. Apply nominal load.
c. Increase IxR compensation (CW rotation of IxR trimmer) until motors speed reaches the no load speed.
d. Notice that a high compensation may result in unstable operation of the amplifier.

7.2.3 Velocity control using tachogenerator feedback

The output leads of the tacho are connected to input 3 and the circuit common (negative feedback). Adjusting the speed is done by using the input gain trimmers (either the command or tacho feedback.

- Increasing/decreasing the feedback gain will decrease/increase the speed.
- Increasing/decreasing the command gain will increase/decrease the speed.

The tacho voltage is adjusted by calculating R95 for two tachogenerator voltages ranges:

1) For $V_{Tm} > 4V$ $\quad R95 = 3.25 \times 10^3 (V_{Tm} - 4)$

2) For $V_{Tm} \leq 4V$ $\quad R95 = 13 \times 10^3 (V_{Tm} - 1)$

In case 2, R1=3.32Kohm must be inserted.

V_{Tm} - Voltage generated by tachogenerator at max velocity.

Actual resistor value should be as close as possible to the calculated value.

A filtering capacitor, C7, is placed in parallel to R14 to minimize noise carried on the input signals. This is specially beneficial when employing motors where a significant degree of electromagnetic coupling is present between armature and tachogenerator. Values in the range of 1000pF - 6800pF are recommended.

7.2.4 <u>Activating the loss of tacho protection</u>

Activating the loss of tacho protection is done by inserting J4 (Short jumper) and R79. This protection operates by inhibiting the amplifier for 6-8 seconds whenever it does not sense a tacho signal at input 3, and then automatically restarting it. This cycle will continue endlessly but the motor speed will not run away (small movements will be noticed).

R79 should be calculated:

$$R79 = \frac{35 \times Vs \times 10^3}{Ic \times Ra}$$

Vs - Voltage of power DC bus

Ic - Amplifiers' rated continuous current limit

Ra - Total ohmic resistance in armature circuit

7.3 <u>Operation in current mode</u>

To work at current mode the velocity loop should be disabled by converting the error amplifier to a low gain proportional amplifier (remove R51 and R14). The current limits of the amplifier remain the same as in velocity mode.

Balance adjustment in current mode should be performed as explained in paragph 8.1.

In some applications, especially those where the motor electrical parameters (total inductance and resistance in circuit)

are much smaller or larger than normally encountered, the current loop response should be optimized according to 8.4.

7.4 <u>Differential amplifier connection</u>

The differential amplifier is provided as an option. It can be used for buffering, inverting or elimination of common mode signals.

The differential amplifier inputs are available on terminals 11(14c) 12 (2a). Terminal 11 (14c) is the inverting input, terminal 12 (2a) is the non-inverting input. The output is on terminal 13 (2c), and is to be connected to an available input terminal. The differential amplifier is not internally connected to the summing junction.

The differential amplifier may be used as a buffer or as an eliminator of common mode signals. For a non-inverting buffer amplifier, connect the positive signal lead to terminal 12 (2a) and the negative signal lead to terminal 11 (14c), and connect terminal 11 (14c) to the circuit common. For an inverting buffer amplifier, connect the positive signal lead to terminal 11 (14c), the negative signal lead to terminal 12 (2a), and connect terminal 12 (2a) to the circuit common.

The output of the differential amplifier is given by:

$$V_o = \frac{V12 \times R133}{R133 + R132} \times \left(1 + \frac{R131}{R134}\right) - \frac{V11 \times R131}{R134}$$

V12 - Input voltage of terminal 12 (2a).

V11 - Input voltage of terminal 11 (14c).

Input common mode voltage should not be higher than +6V or lower than -6V.

$$V12 \leq \frac{6 \times (R133 + R132)}{R133} ; \qquad V11 \leq \frac{6 \times R131}{R134}$$

8.

8.1 <u>Balance adjustment</u>

If the motor is rotating with the command signal at zero voltage, a balance adjustment will be necessary. Turn the balance trimmer (T5) as required until the motor stops. As a rule, have the command signal connected and set to zero when balancing the amplifier. This way, any offset in the command signal will be cancelled.

If the balance trimmer has insufficient range, a lower value of resistance can be substituted for R10 to obtain a wider adjustment range.

8.2 <u>Current limit adjustment</u>

The amplifier current limits can be adjusted without the need for loading. For this purpose J2 has to be arranged as follows:

A-B Short

A-C Open

Disconnect motor leads and remove J4 (if installed). Connect a voltmeter between terminal 8 (12c) and the circuit common, and apply maximum input voltage to one of the inputs to cause an error at the error amplifier (input gain trimmer should be fully CW). Its maximum voltage limits the maximum current delivered to the motor.

In order to adjust the continuous limit, the peak limit should be lower than the continuous limit - turn T3 (Ip) CCW. At the point when peak limit=continuous limit, the meter readout will stop decreasing. Turn 4-6 turns more. Then, using T2 (Ic), adjust the continuous limit by monitoring the meter readout (See table for current monitor scalings).

Full CW rotation will result in type current limit.

After adjusting the continuous limit, readjust T3 up to the desired peak level.

Current monitor scale:

5-12A types	0.2V/A
15-20A types	0.125V/A
25-30A types	0.08V/A

8.3 <u>Current limits contour adjustment</u>

The amplifier can be configured to have either continuous current limit or peak current limit or both which depend on motor velocity (See 5.3.2). For this purpose (when using tacho feedback) J1 has to be arranged as follows:

A - B	Open
A - C	Short

The general shape of the operating envelope is given in fig. 12

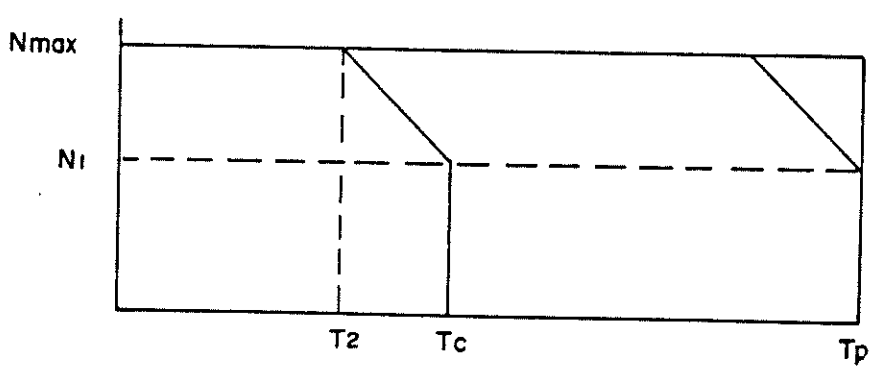

Tc - Max continuous torque up to velocity N_1

T_2 - torque at max velocity Nmax.

Fig. 12

Current limits contour

The user should derive the relations $r1=N_1/Nmax$ and $r2=T_2/Tc$ from the motor data sheet.

R32 and R33 should be installed with values according to the following relations:

$$R32 = 33 \times \frac{1 - r1}{1 - r2} \quad \text{(Kohm)}$$

$$R33 = 62 \times \frac{R32}{R32 + 33 \times r1} \quad \text{(Kohm)}$$

The continuous current limit is velocity dependent (without peak current contouring) if J3 is arranged as follows:

A-B = Short
A-C = Open

The peak current limit is velocity dependent (without continuous current contouring) if J3 is arranged as follows:

A-B = Open
A-C = Short

In order to get velocity dependent continuous and peak current limits, J3 has to be arranged as follows:

A-B = Short
A-C = Short

Notice:

When operating in current mode or armature voltage feedback the contour will be activated by arranging J1 as follows:

A-B = Short
A-C = Open

R79 should also be inserted (For calculation of R79 see 7.2.4)

8.4 Response adjustment - Velocity loop

In most applications optimum response is achieved by adjusting the compensation (COMP) trimmer. Adjustment procedure is as follows:

- Provide the amplifier with a low frequency, bi-directional square wave velocity command (A 0.5Hz, ±2.0V waveform is often employed).
- Apply power to the amplifier, and while monitoring the tacho signal, gradually adjust the COMP trimmer from the CW toward the CCW position. Optimum response (critically-damped) should be achieved at some position before reaching full CCW on T4. Fig 13 illustrates some waveforms observed for various T4 settings.

In some applications, especially those where the load inertia is much smaller or larger than normally encountered, the standard compensation components values of 0.047µF for C19 and 120Kohm for R14 may not allow an optimum setting of the COMP trimmer T4. In fact, the velocity loop may be unstable for any setting of T4.

In these cases different values for C19 and R14 must be chosen. The following procedure can be used to select these values:

- Short circuit C19 with a short jumper wire.
- Replace R14 with a decade resistance box. Initially set the box resistance at 20Kohm.
- Set T4, the COMP trimmer to approximately midrange.
- Input a 0.5Hz, 2V bi-directional square wave velocity command signal to the amplifier.
- Apply power, and while monitoring the tachometer signal, gradually increase the value of the box resistance until optimum response as depicted in Fig 13 is achieved.
- Substitue the closest standard value discrete resistor for R14 and remove the decade resistance box.
- Remove the shorting jumper across C19, and again check the response using the squarewave test signal. If near optimum results are obtained, trim the response using the COMP trimmer T4 for the optimum.
- If the previous step does not yield satisfactory results, if unacceptable overshooting has been noted, substitute a larger value than 0.047µF; or, if the response is overdamped substitute a smaller value than 0.047µF. Repetition of this procedure should yield an optimum choice for C19.
- Finally, select a new value of C7 so that the time constant of R14xC7 remains approx. as it was with the standard value of R14.

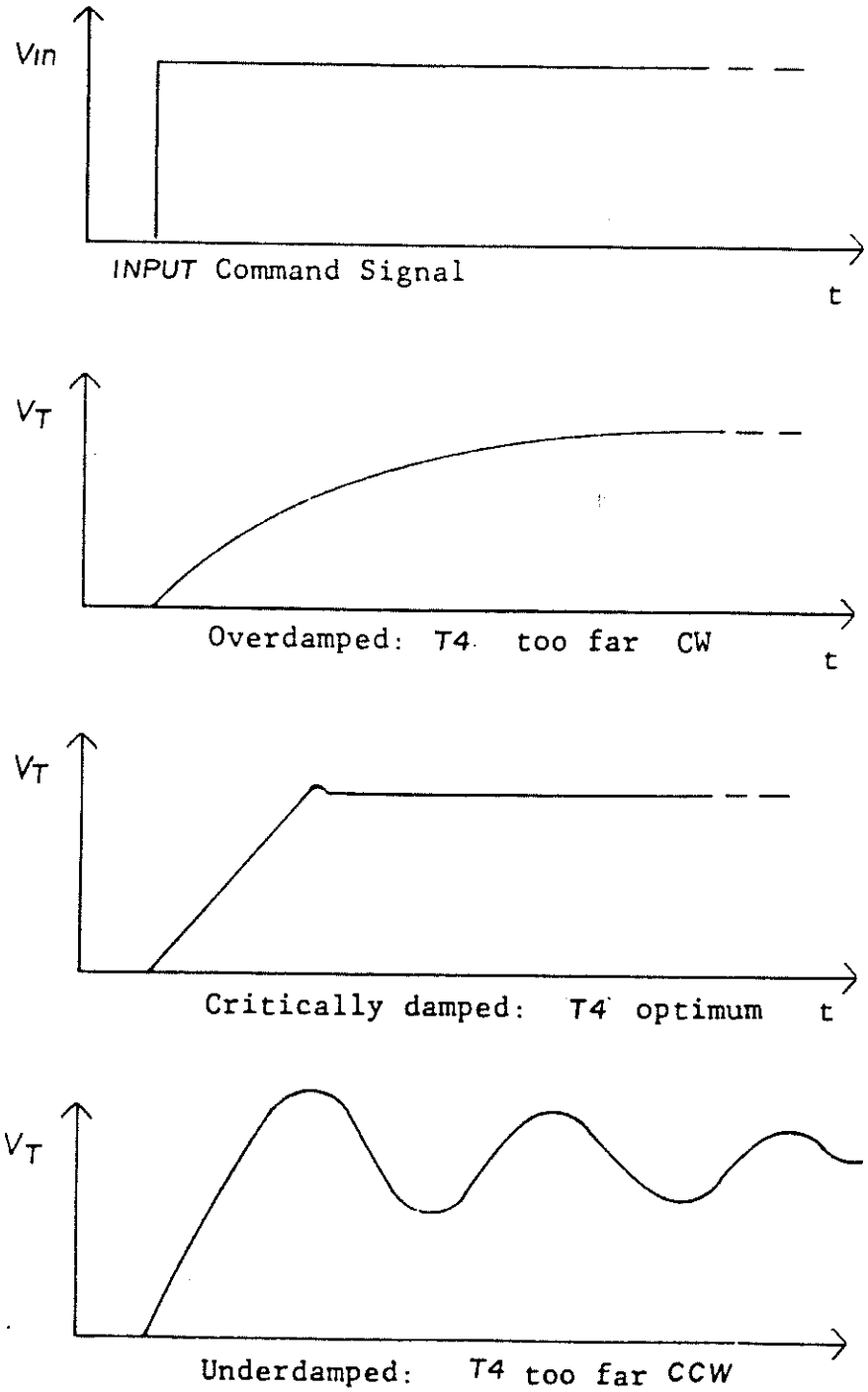

Fig. 13

Typical velocity response waveforms

8.5 Current gain and response

8.5.1 Response adjustment - current loop

In most applications it is not necessary to adjust the current loop to achieve the optimum response. When there are extreme electrical parameters in the armature circuit (inductance and resistance) the standard components values of 0.01µF for C20 and 100Kohm for R50 may not yield with the optimum response. The current loop should be optimized as follows:

- Turn the amplifier to a current amplifier by removing R51 and R14.
- Provide the amplifier with a bi-directional square wave current command (100-200Hz, ±2.0V waveform is often employed).
- Apply power to the amplifier, and monitor the load current either by a current probe or by the current monitor. For this application J2 should be arranged as follows:

A-C Short A-B Open

If the current response is not critically damped, use the following procedure:

- Short circuit C20 with a short jumper wire.
- Replace R50 with a decade resistance box. Initially set the box resistance at 10Kohm.
- Apply the square wave test signal to the amplifier input.
- Apply power, and while monitoring the load current, gradually increase the value of the box resistance until optimum response as depicted in Fig 14 is achieved.
- Substitue the closest standard value discrete resistor for R50 and remove the decade resistance box.
- Remove the shorting jumper across C20, and again check the response using the square wave test signal.
- If the previous step does not yield satisfactory results, if unacceptable overshooting has been noted, substitute a larger value than 0.01µF; or, if the response is overdamped, substitute a smaller value than 0.01µF. Repetition of this procedure should yield an optimum choice for C20.

8.5.2 Current gain adjustment

Disconnect motors leads. J2 has to be arranged as follows:

A-B = Short A-C = Open

Apply voltage to the desired input and read the current monitor output at terminal 8 (12c). Adjust the input gain trimmer until the desired gain is achieved. The current gain (A/V) is given by:

$$Gc = \frac{\text{Voltage at terminal 8}}{\text{Vin x Current monitor scale}}$$

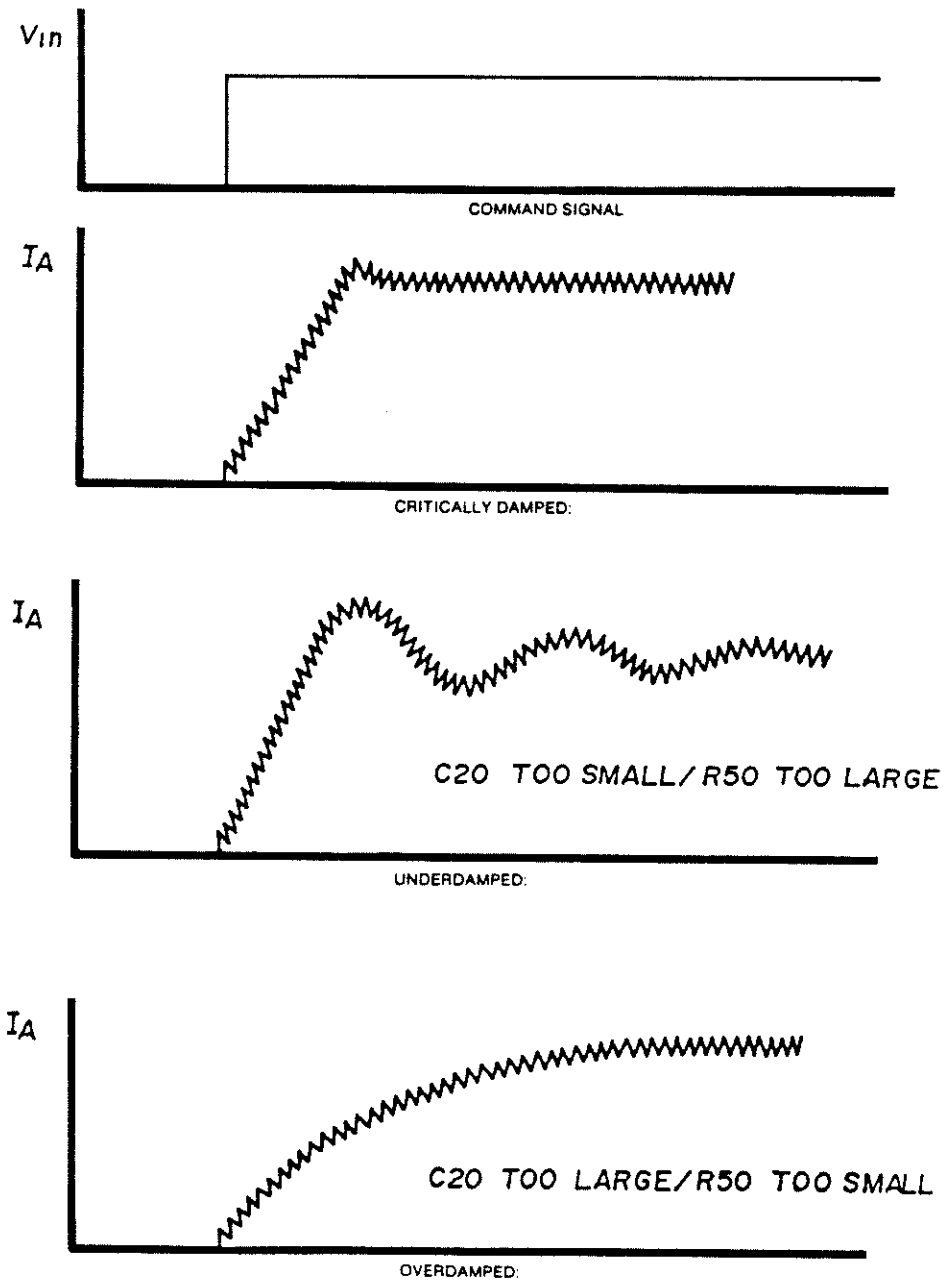

Fig. 14

Typical current response waveforms

8.6 Adjusting trimmers - summary

Eight trimmers are installed on the upper board of the amplifier with the following functions:

T8 (Gain 1) - CW rotation increases input 1 gain (terminal 5 (10a)).

T7 (Gain 2) - CW rotation increases input 2 gain (terminal 6 (10c)).

T6 (Gain 3) - CW rotation increases input 3 gain (terminal 7 (12a)).

T5 (Balance) - see 8.1.

T4 (compensation) - See 8.4.

T3 (Ip) - CW rotation increases peak current limit.

T2 (Ic) - CW rotation increases continuous current limit (see 8.2).

T1 (IxR) - IxR compensation for velocity control using armature voltage feedback (see 7.1.2)

8.7 LED diagnostics

Five LEDs are installed on the upper board of the amplifier with the following designations: Ic, Sh, In, Pr, Vs. Under normal operation only Vs should illuminate (Vs indicates the existance of supply voltages). The following table represents all the combinations possibilities of the LEDs:

	1	2	3	4	5	6	7
Ic				X	X		
Sh			X			X	
In	X	X	X		X	X	X
Pr		X				X	
Vs	X	X	X	X	X	X	

X - Illuminated LED

1. External inhibit.
2. Under / over voltage protection.
3. Short protection.
4. Continuous current limit.
5. Insufficient load inductance or loss of tacho feedback.
6. Excess temperature.
7. Internal supplies are loaded (either internally or externally).

9. Protective functions

All the protective functions (excluding 9.4) activate internal inhibit. If the cause of the inhibit disappears, the amplifier will restart automatically. The user can monitor this function by checking terminal 16 (4c).

9.1 Short circuit protection

The short circuit protection uses the capability of the power MOSFET to tolerate high energy peaks for short periods of time.

This protection is realized by sensing current in the DC line. Every current peak above a certain value will inhibit the amplifier for a period of approx. 30mS.

If a short circuit condition still exists, the cycle will repeat endlessly while turning on the Short LED (Sh) to indicate short circuit condition.

The amplifier is protected against shorts between outputs, either output to ground or to positive supply line.

9.2 Under/over voltage protection

Whenever the DC bus voltage is under or over the limits indicated in the technical specifications, the amplifier will be inhibited.

9.3 Temperature protection

Temperature sensor is mounted on the heatsink. If, for any reason, the temperature exceeds 85 degrees centigrade the amplifier will be inhibited. The amplifier will restart when the temperature drops below 80 degrees.

In types ESA 30/160,25/200 a 24VDC brushless fan is installed (In addition to the temperature protection function). This fan is fed by an internal power supply and starts to operate automatically only when the heat sink temperature reaches 60 degrees. It is turned off automatically below 55 degree.

9.4 Wrong supply connection

If the DC supply is connected in the wrong polarity the FET internal diodes will create a short circuit condition and the internal fuse will blow.

9.5 Insufficient load inductance

Whenever the load inductance is too small, the current spikes will be very high. In such cases the amplifier will be disabled.

9.6 Loss of tacho signal

If the amplifier loses the tacho signal it will inhibit itself and restart after a delay of 6-8 sec.

9.7 Internal power supply failure

In any case that the sum of the internal power supplies is below 13V or its difference higher than 1V, the amplifier will be inhibited.

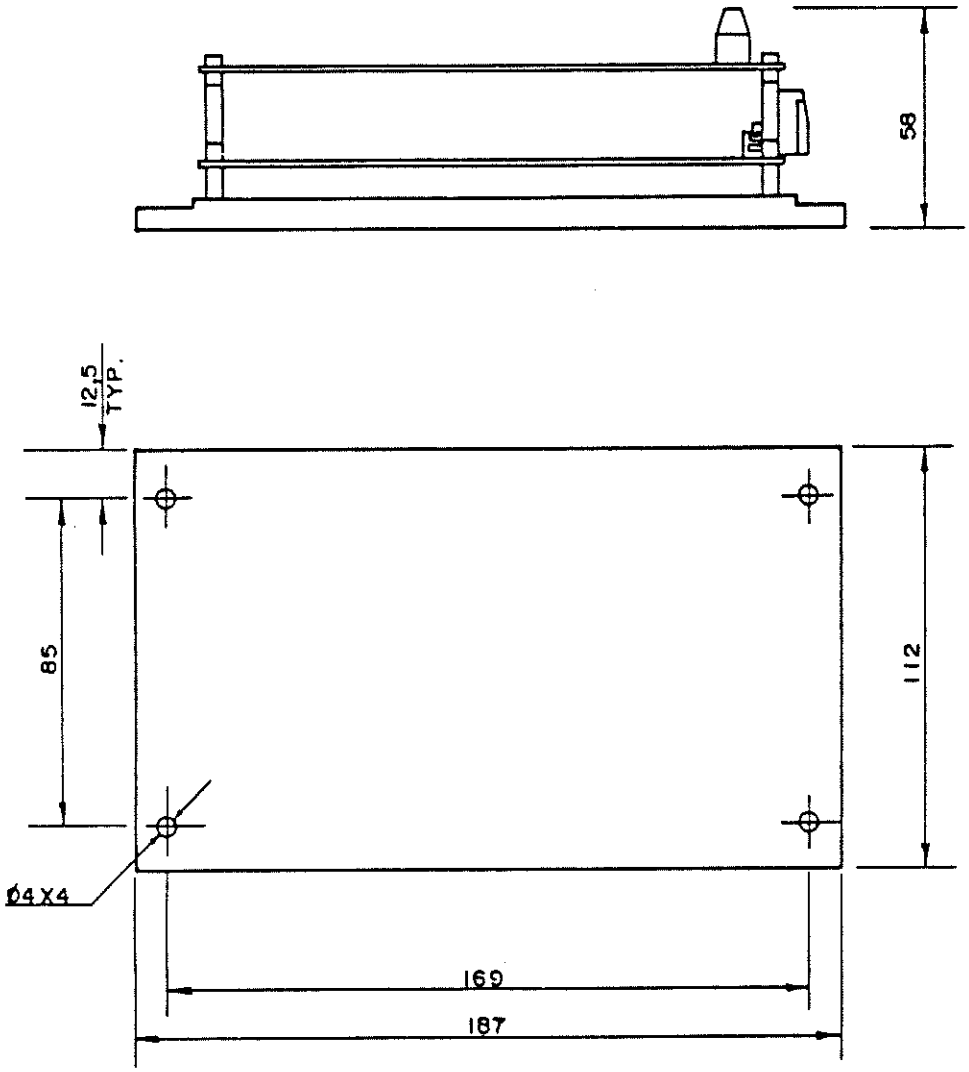

SUBJECT		SCALE		DATE	NAME
EXTERNAL DIMENSIONS		1:2	DR. BY	3.89	Amit
DR. NO.	MATERIAL		CHECK		
			APP.		
BELONGS TO ASS. NO. ESA-5,10,20/75H 8,12/160H					

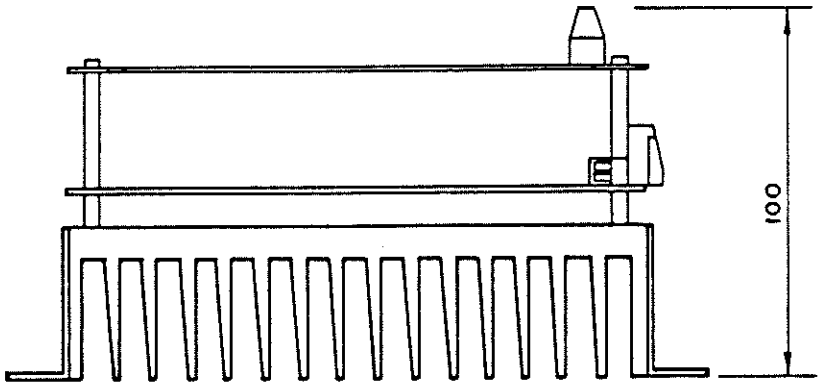

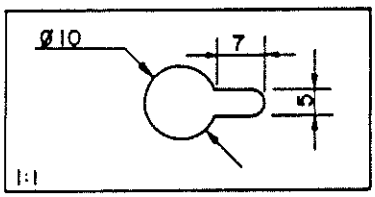

DETAIL A

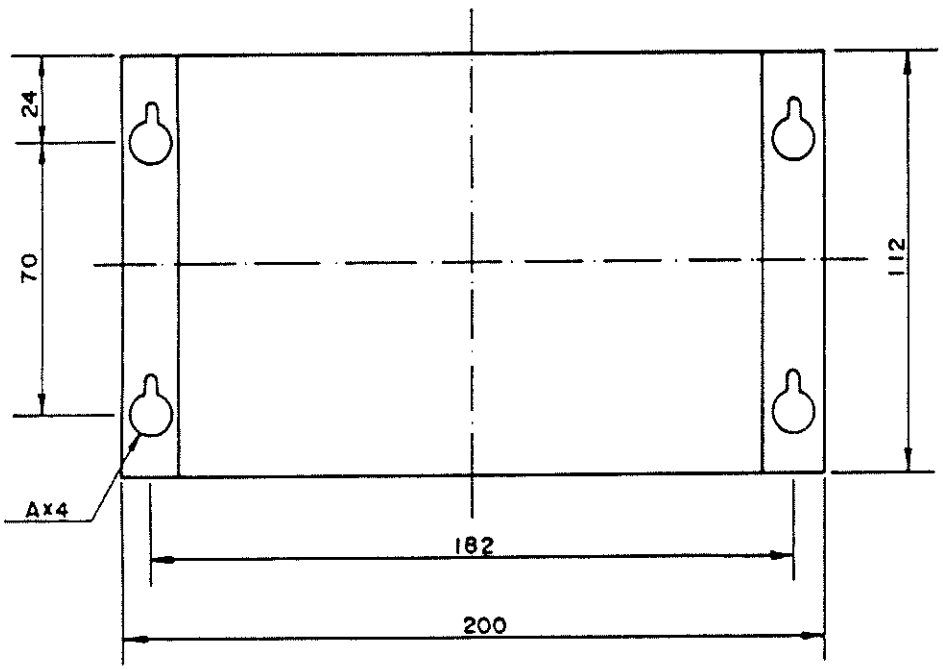

SUBJECT		SCALE		DATE	NAME
EXTERNAL DIMENSIONS		1:2	DR. BY	3.89	Amit
DR. NO.	MATERIAL		CHECK		
			APP.		
BELONGS TO ASS. NO. ESA 10/160H, 15/75H					

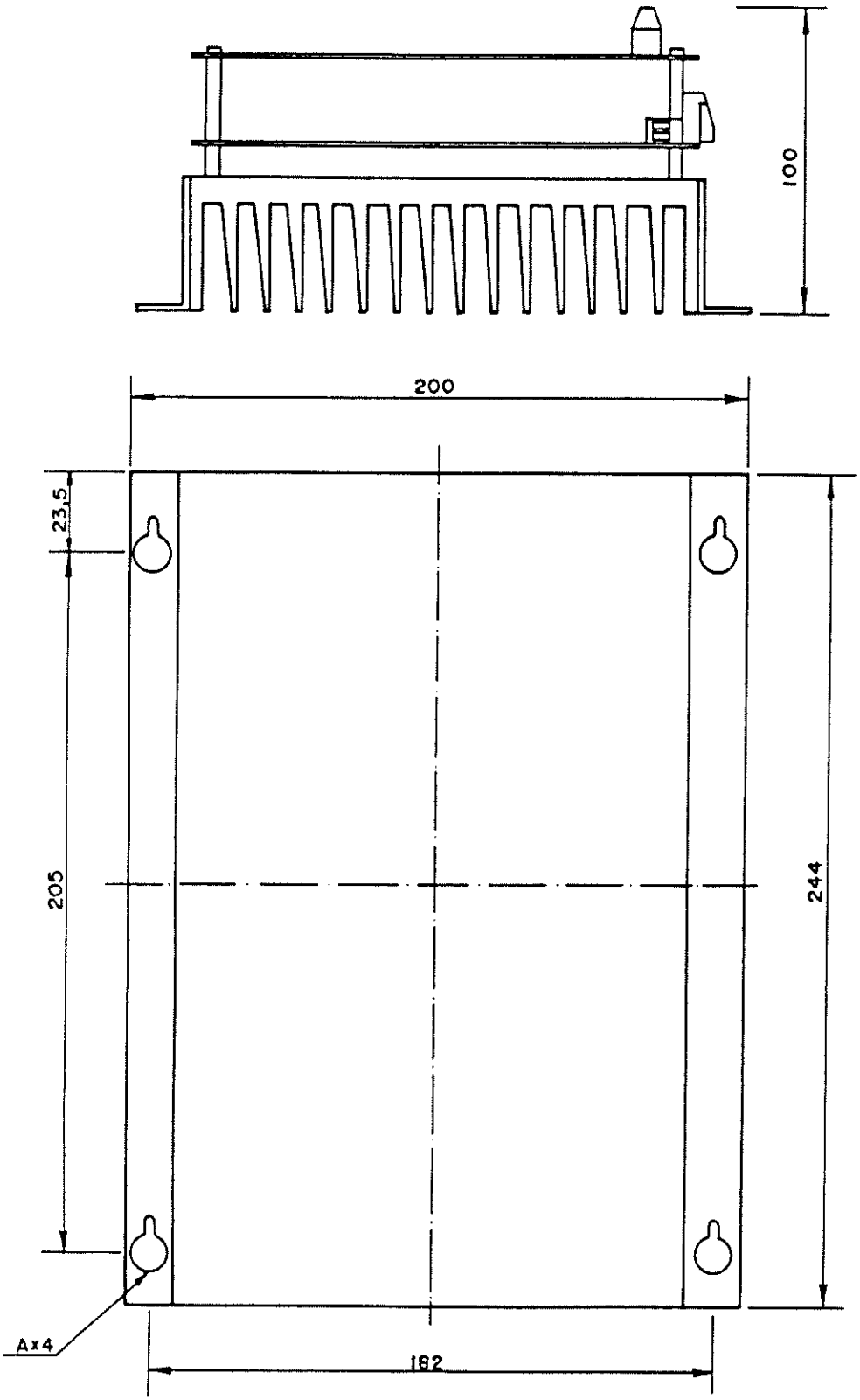

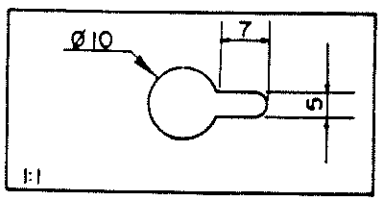

DETAIL A

SUBJECT	SCALE		DATE	NAME
EXTERNAL DIMENSIONS	1:2	DR. BY	3.89	Amit
DR. NO.	MATERIAL	CHECK		
		APP.		
BELONGS TO ASS. NO. ESA 16/160,200H				

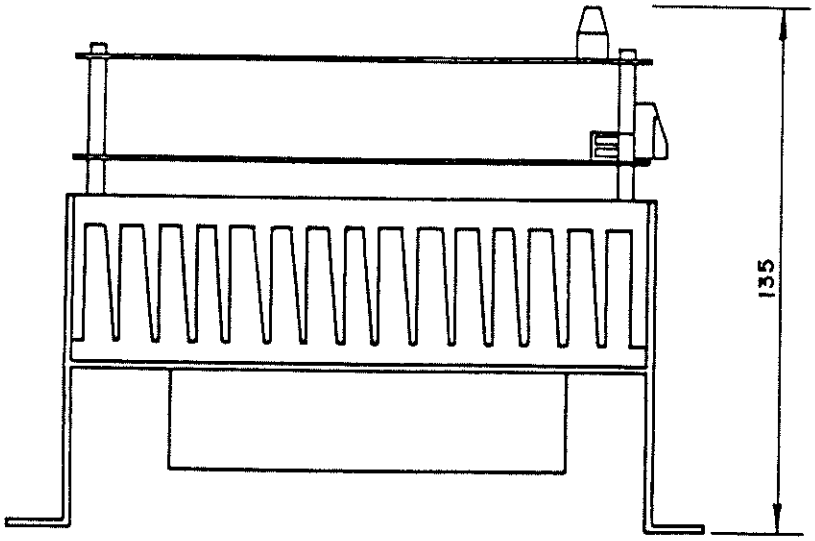

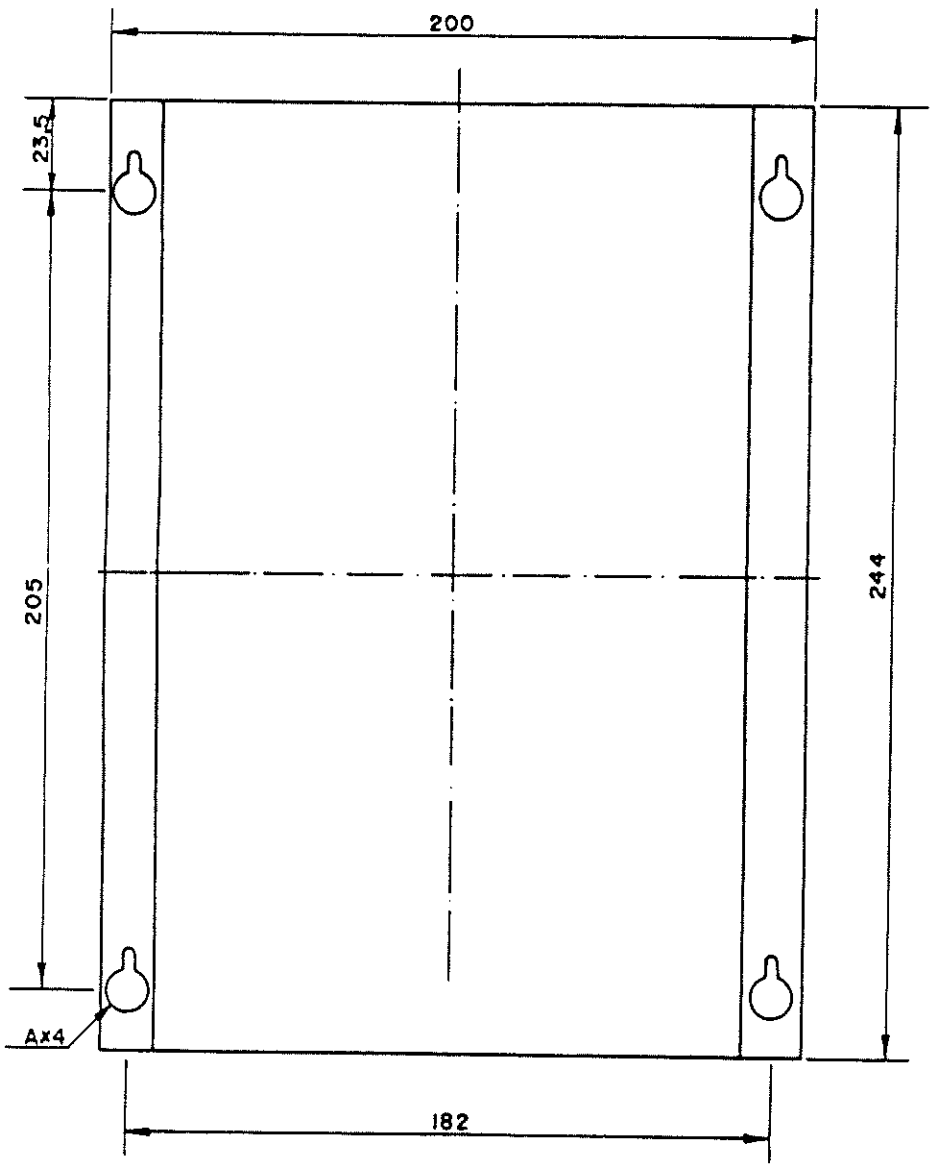

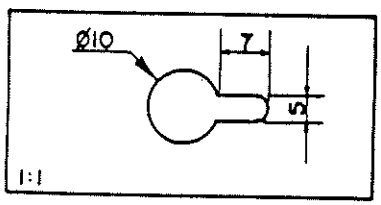

DETAIL A

SUBJECT EXTERNAL DIMENSIONS	SCALE 1:2		DATE	NAME
		DR. BY	3.89	Amit
DR. NO.	MATERIAL	CHECK		
		APP.		
BELONGS TO ASS. NO. ESAF 30/160, 25/200H				

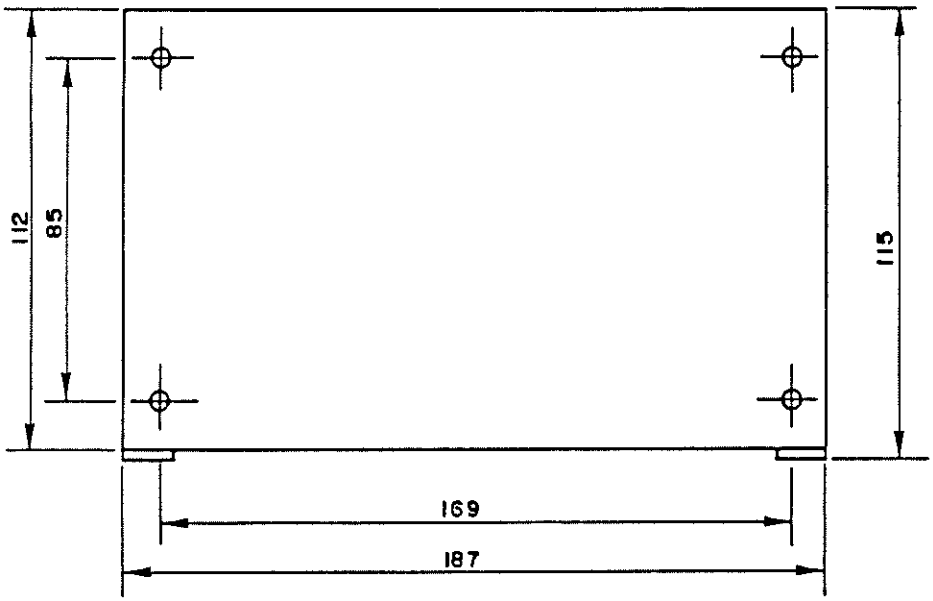

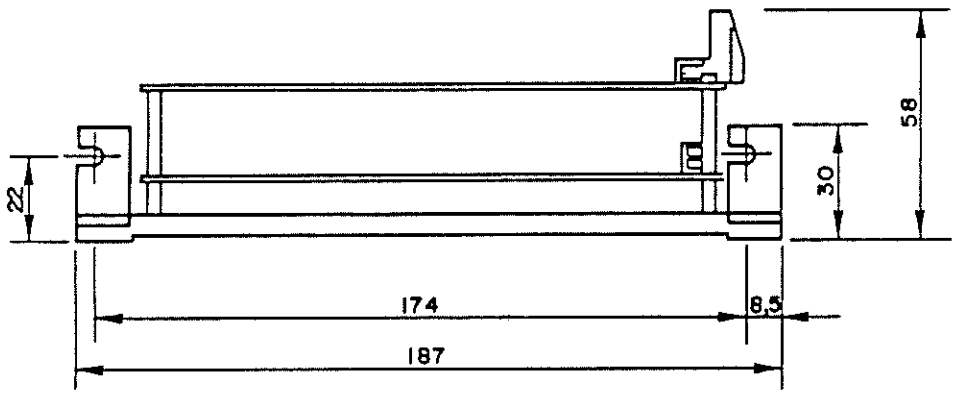

SUBJECT	SCALE		DATE	NAME
EXTERNAL DIMENSIONS	1:2	DR. BY	3.89	Amit
DR. NO.	MATERIAL	CHECK		
		APP.		
BELONGS TO ASS. NO. ESA 5,10,20/75V 8,12/160V				

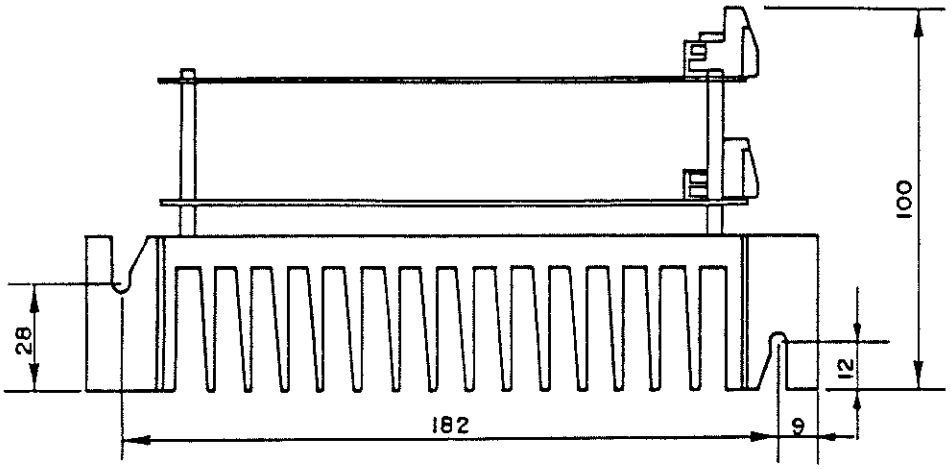

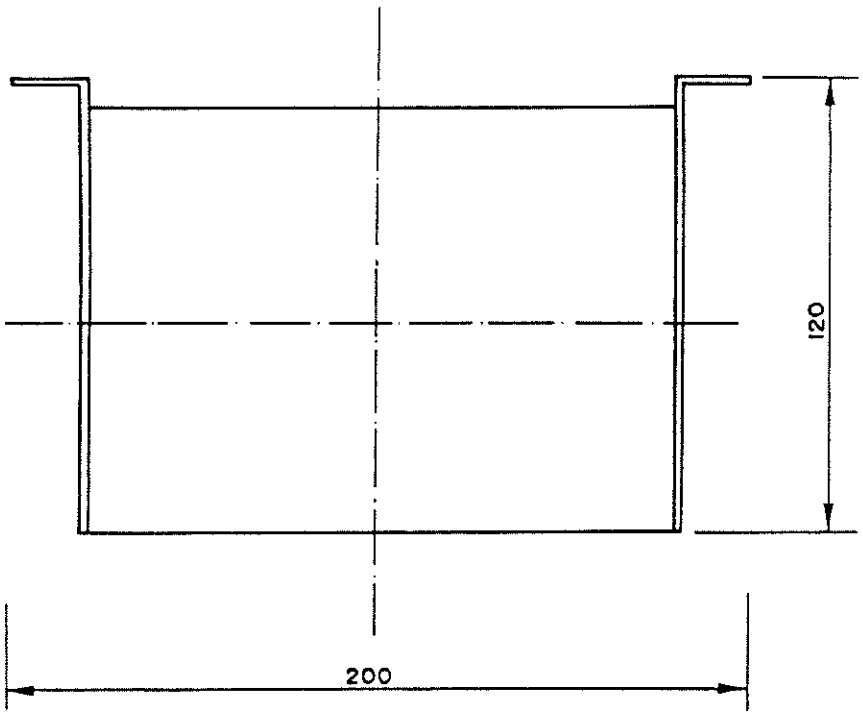

SUBJECT	SCALE		DATE	NAME
EXTERNAL DIMENSIONS	1:2	DR. BY	3.89	Amit
DR. NO.	MATERIAL	CHECK		
		APP.		
BELONGS TO ASS. NO. ESA 10/160, 15/75V				

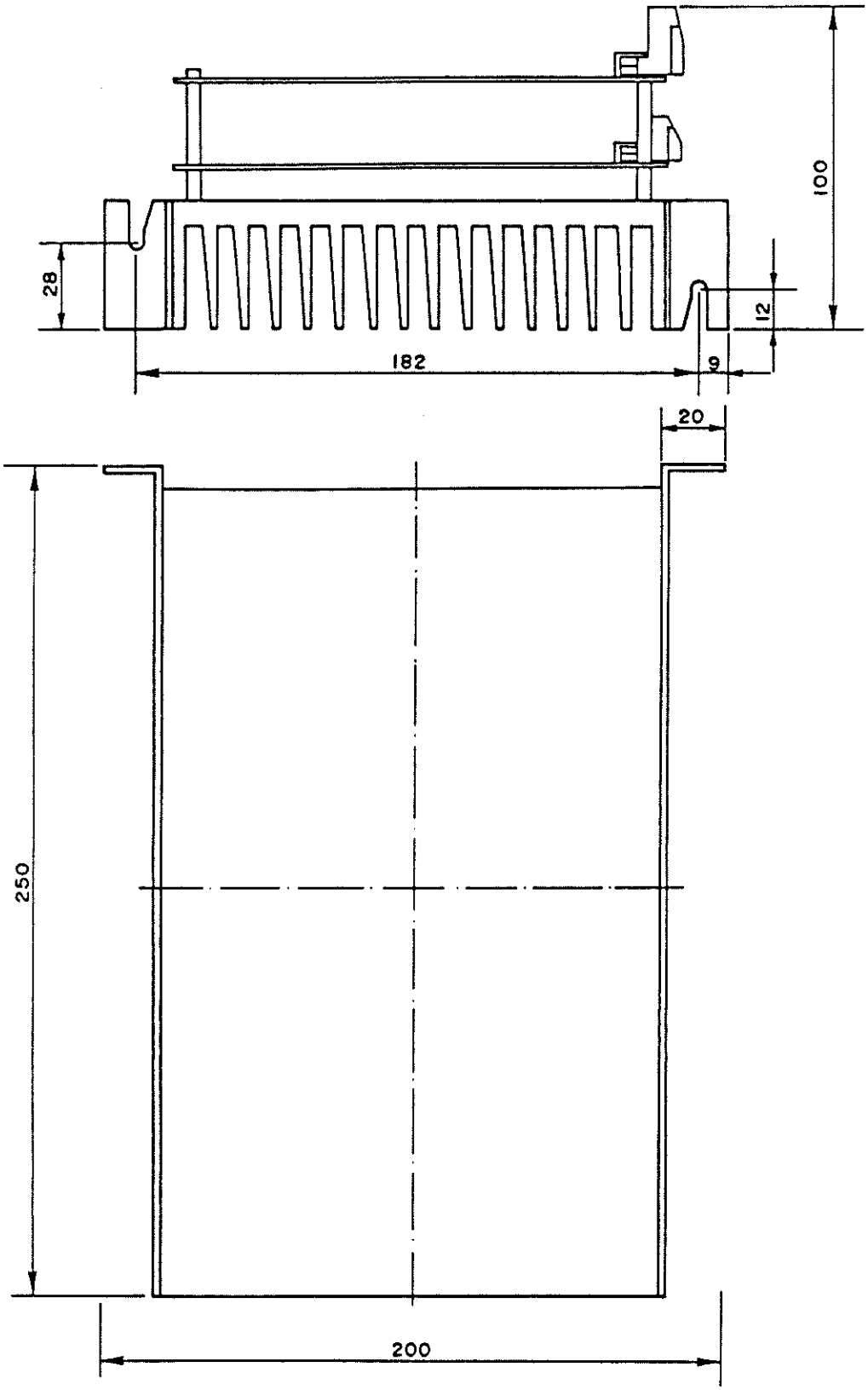

SUBJECT	SCALE		DATE	NAME
EXTERNAL DIMENSIONS	1:2	DR. BY	3.89	Amit
DR. NO.	MATERIAL	CHECK		
		APP.		
BELONGS TO ASS. NO. ESA 16/160,200V				

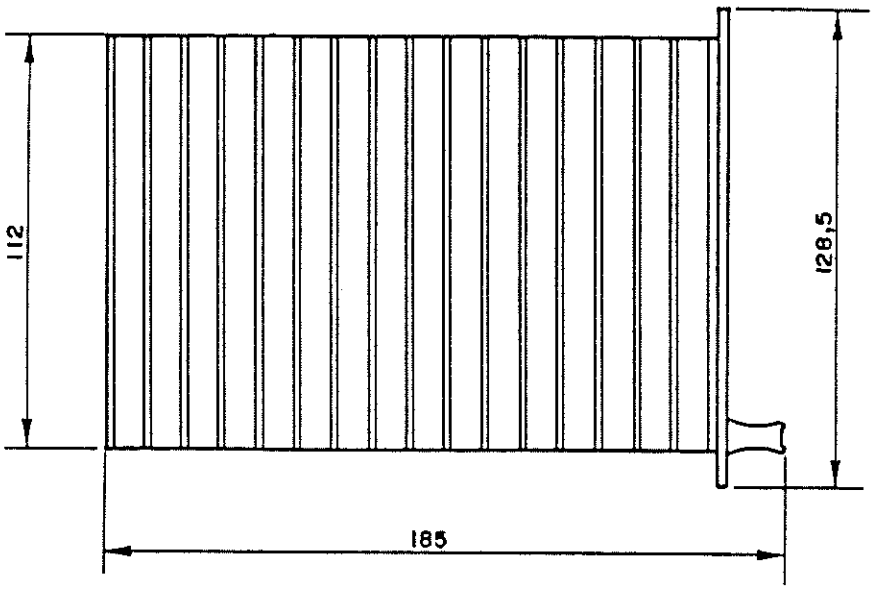

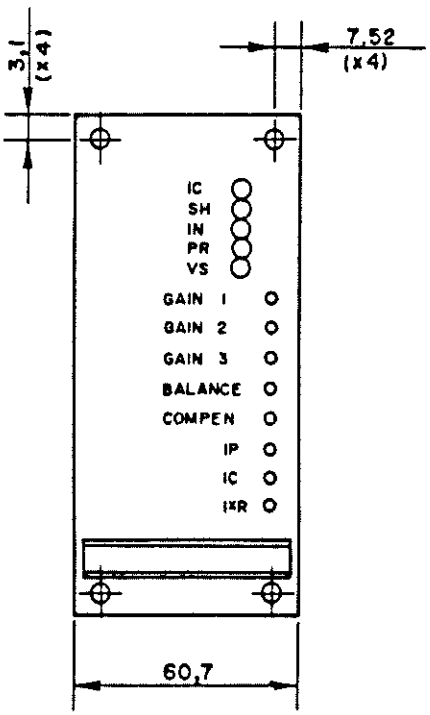

SUBJECT		SCALE		DATE	NAME
EXTERNAL DIMENSIONS		1:2	DR. BY	3.89	Amit
DR. NO.	MATERIAL		CHECK		
			APP.		
BELONGS TO ASS. NO. ESA 5,10,20/75R 8,12/160R					

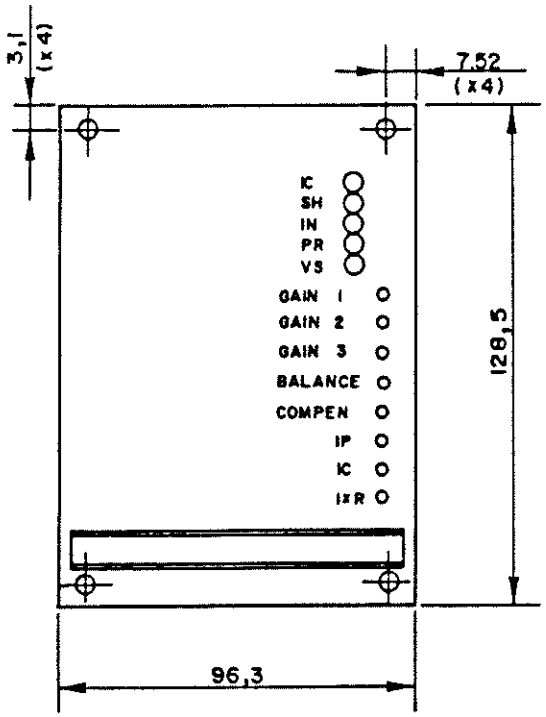

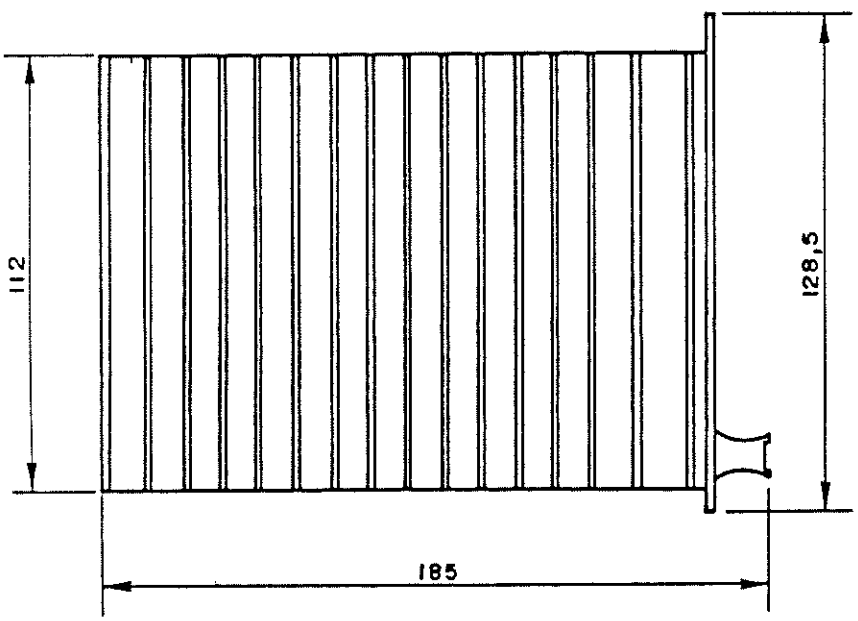

SUBJECT		SCALE		DATE	NAME
EXTERNAL DIMENSIONS		1:2	DR. BY	3.89	Amit
DR. NO	MATERIAL		CHECK		
			APP.		
BELONGS TO ASS. NO. ESA 10/160, 15/75R					

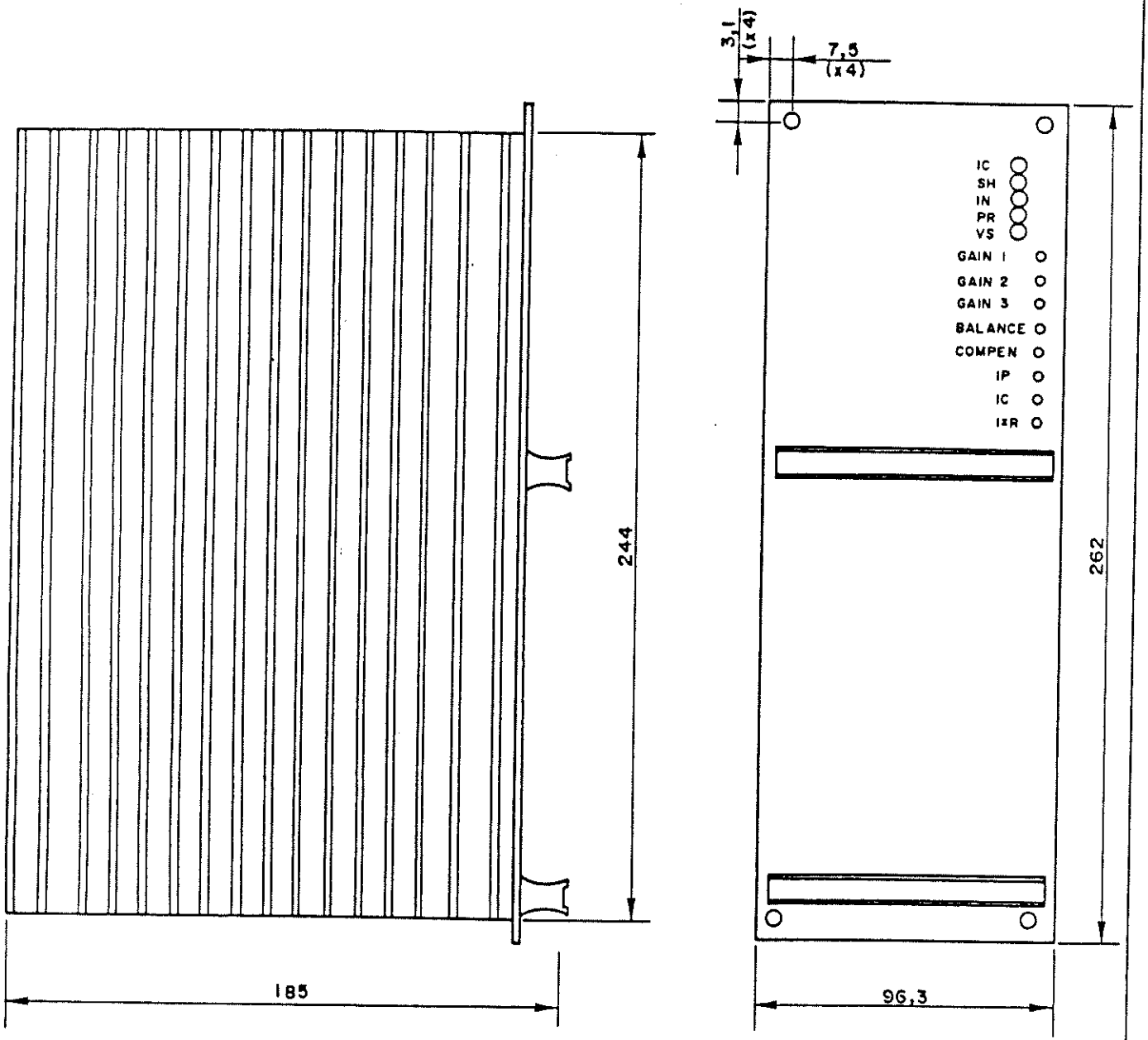

SUBJECT	SCALE		DATE	NAME
EXTERNAL DIMENSIONS	1:2	DR. BY	3.89	Amit
DR. NO. / MATERIAL		CHECK		
		APP.		
BELONGS TO ASS. NO. ESA 16,30/160R 16,25/200R				

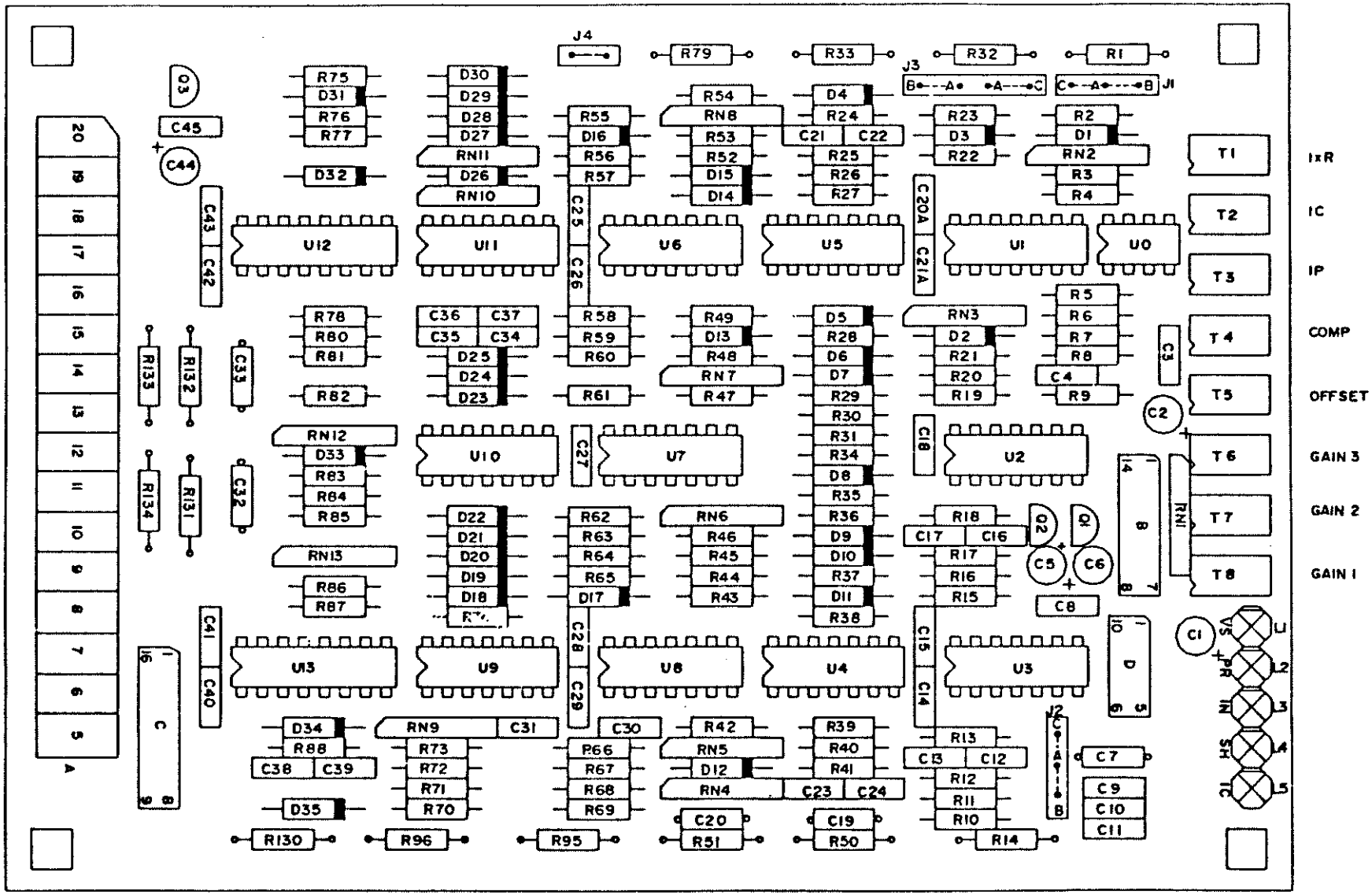
IxR
IC
IP
COMP
OFFSET
GAIN 3
GAIN 2
GAIN 1

WARRANTY

All products manufactured by Galil Motion Control are warranted against defects in materials and workmanship. The warranty period for controller boards is 1 year. The warranty period for all other products is 90 days.

In the event of any defects in materials or workmanship, Galil Motion Control will, at its sole option, repair or replace the defective product covered by this warranty without charge. To obtain warranty service, the defective product must be returned within 30 days of the expiration of the applicable warranty period to Galil Motion Control, properly packaged and with transportation and insurance prepaid. We will reship at our expense only to destinations in the United States.

Any defect in materials or workmanship determined by Galil Motion Control to be attributable to customer alteration, modification, negligence or misuse is not covered by this warranty.

EXCEPT AS SET FORTH ABOVE, GALIL MOTION CONTROL WILL MAKE NO WARRANTIES EITHER EXPRESS OR IMPLIED, WITH RESPECT TO SUCH PRODUCTS, AND SHALL NOT BE LIABLE OR RESPONSIBLE FOR ANY INCIDENTAL OR CONSEQUENTAL DAMAGES.